TIMKEN

# Reliable Solutions for Continuous Casters






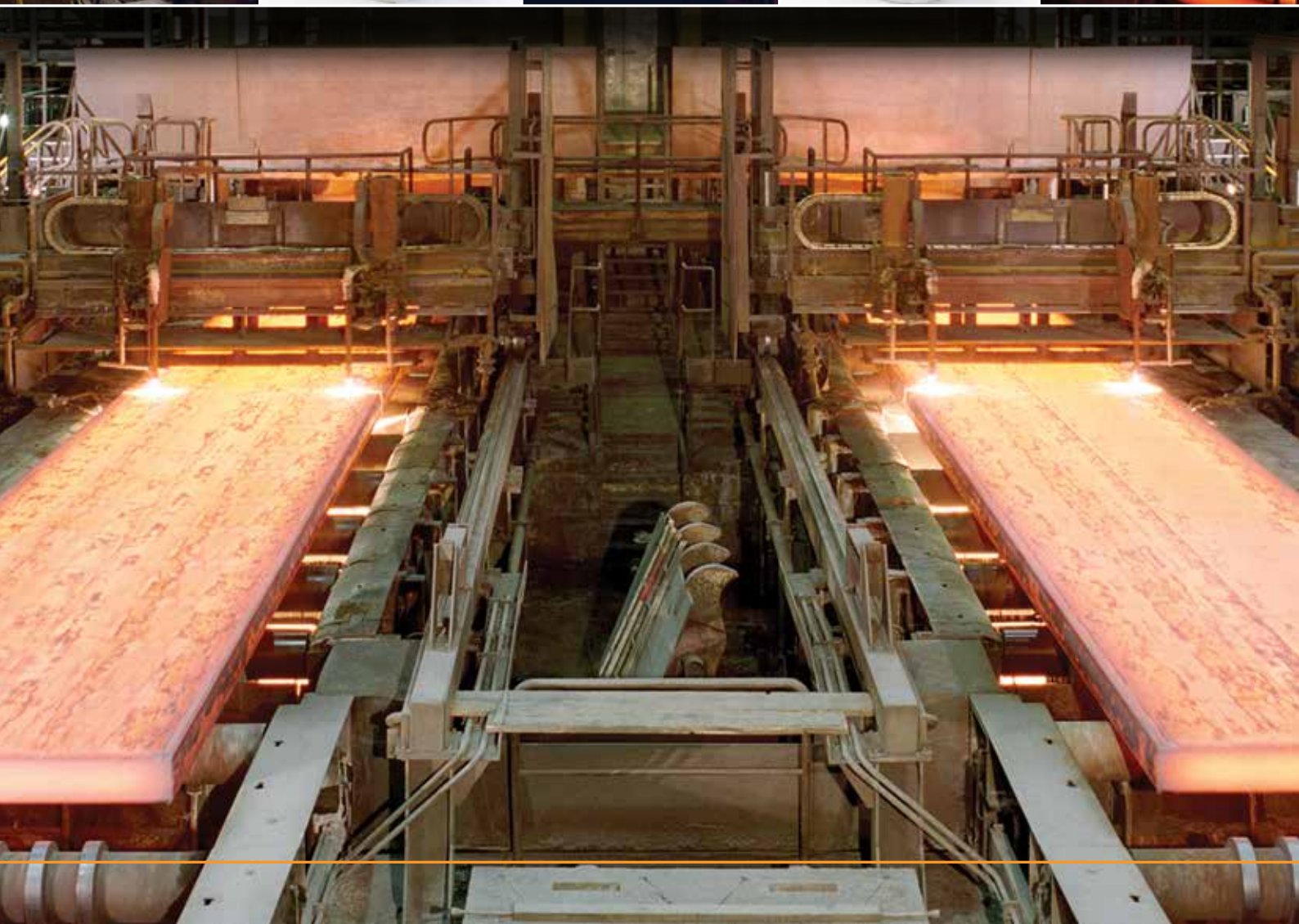

## For More Than A Century, Our Standards Have Set The Standard

***Around the world, companies turn to Timken for innovation and reliability. With expertise in materials science and precision manufacturing, we leverage more than 100 years of experience helping our customers solve their toughest technical problems in the world's most demanding applications.***


### Industry Experience

The continuous caster is one of the most challenging environments for bearings. In many critical positions, they are subject to high loads and low rotational speeds, often at elevated temperatures. Many bearings must also perform in an environment heavily contaminated with water, steam and scale.

As a steelmaker, Timken understands the challenges of this high-capacity, high-heat application. We know that every bearing in the caster – from the ladle turret, down through the bender and segments, to the discharge area – must deliver reliable performance. That is why the industry's leading machine builders and operators turn to Timken for their continuous caster solutions.

### Technology and Innovation

As an innovation leader, Timken invests more than $50 million annually in our global technology organization. This investment provides a significant return, allowing Timken to develop innovative new products and technologies that set standards within the primary metals industry.

### Friction Management Solutions – A Total System Approach

At Timken, we integrate bearings, lubrication, seals, repair services, maintenance practices, gears, condition monitoring and training to address a variety of customer requirements. As your needs change, we continue to leverage our capabilities to offer a broader array of bearings, related products and integrated services.

### Global Presence

With nearly 200 technology, manufacturing, sales and distribution facilities in 26 countries, Timken has a global network and commitment to quality to meet our customers' needs throughout the world. Timken worldwide quality standards are implemented in every plant to ensure global consistency in design and manufacturing.

## The Caster Challenge

- Cost associated with machine operation and downtime and the impact on downstream operations
- Maintenance and repair of segment roll bearings and housings
- Controlling costs per ton and maintenance budgets

## The Timken Solution

- Improved product reliability and performance increases mill uptime and productivity
- Advanced product design allows for quick and easy segment rebuild and reinstallation
- Application knowledge associated with 40 years of experience supplying to the continuous casters market
- Reclamation services extend bearing life and reduce operating cost
- Field engineering support provides on-site trouble-shooting, technical assistance and training

***An insider's knowledge of steelmaking and continuous casting makes Timken a trusted resource for your operations.***

***Photos taken from inside Timken's Harrison Steel Plant.***

# Timken® Bearings for Continuous Casters

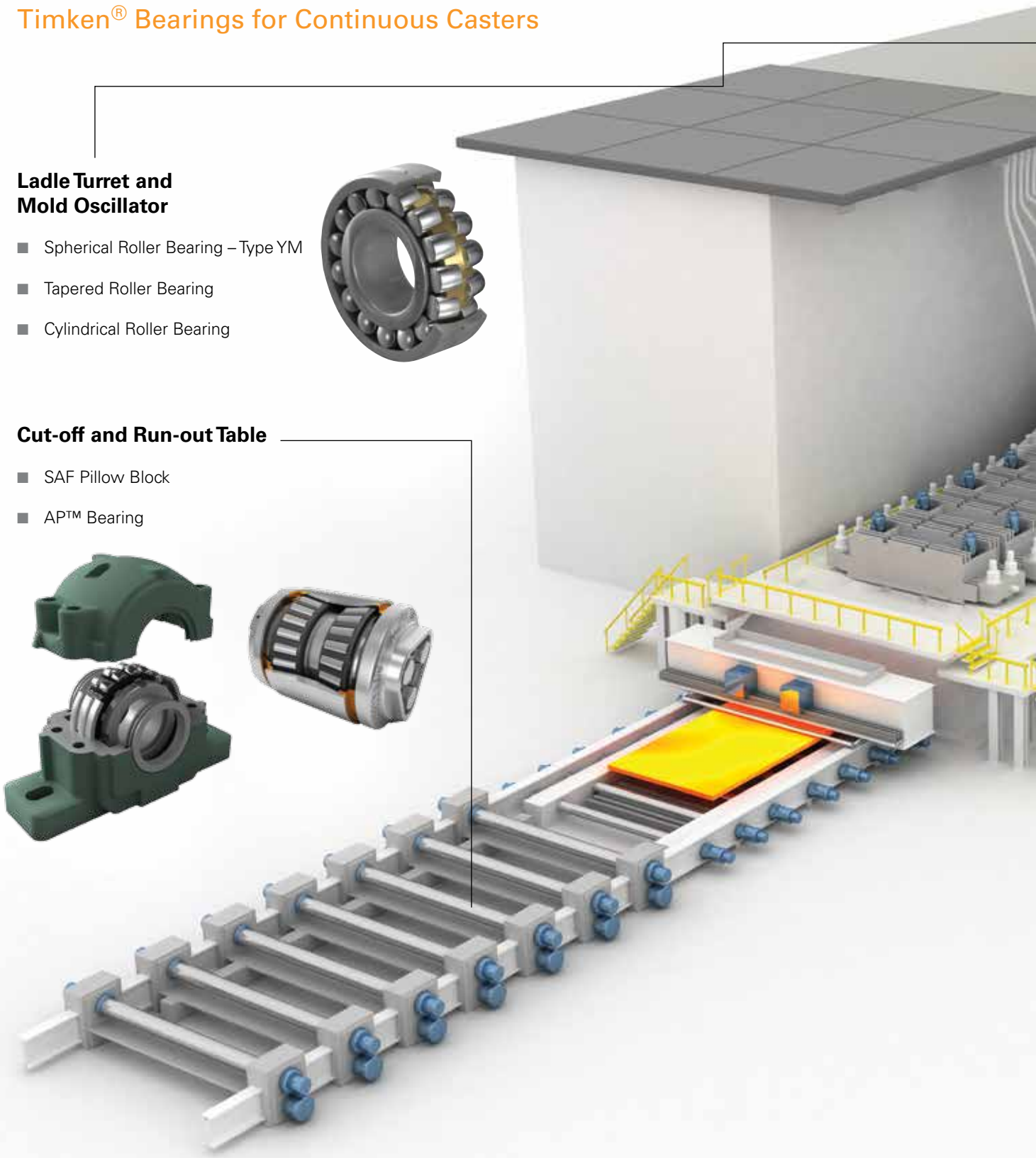

## Ladle Turret and Mold Oscillator

- Spherical Roller Bearing – Type YM
- Tapered Roller Bearing
- Cylindrical Roller Bearing

## Cut-off and Run-out Table

- SAF Pillow Block
- AP™ Bearing

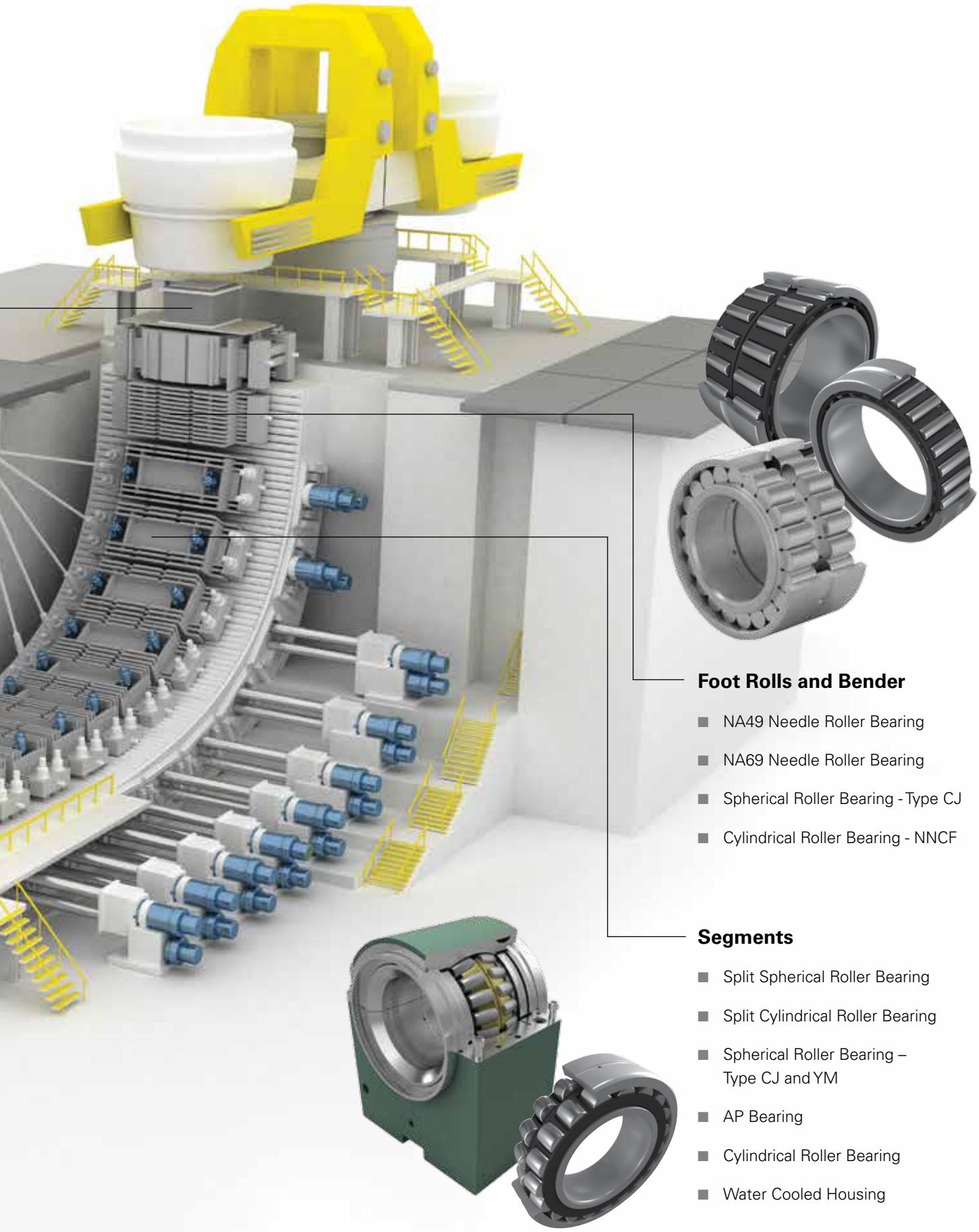

## Foot Rolls and Bender

- NA49 Needle Roller Bearing
- NA69 Needle Roller Bearing
- Spherical Roller Bearing - Type CJ
- Cylindrical Roller Bearing - NNCF

## Segments

- Split Spherical Roller Bearing
- Split Cylindrical Roller Bearing
- Spherical Roller Bearing – Type CJ and YM
- AP Bearing
- Cylindrical Roller Bearing
- Water Cooled Housing

*Contact your Timken representative for more information on proper mounting and lubrication practices for your application.*

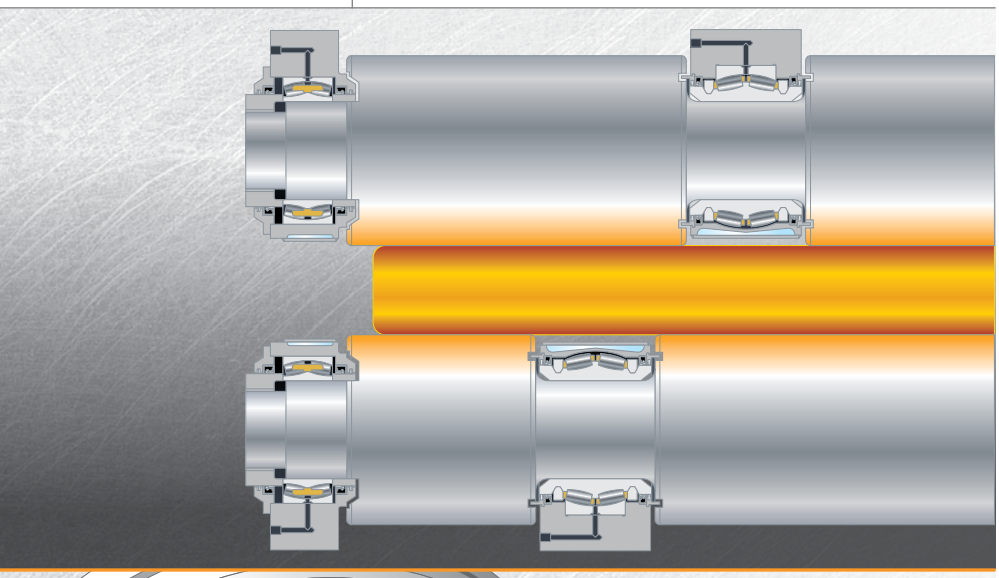

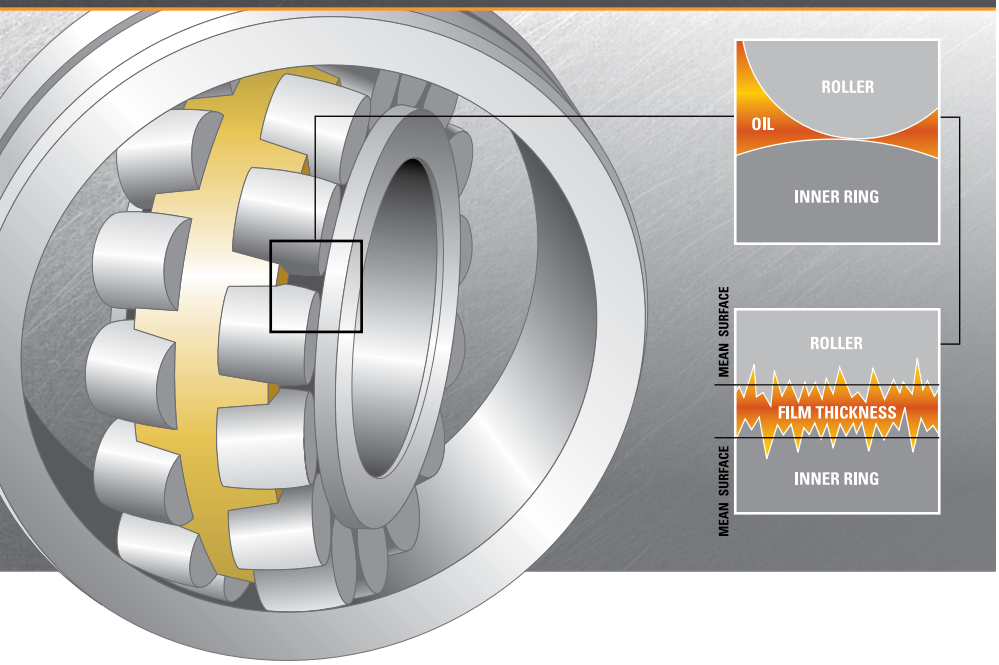


## Mounting

The majority of bearing applications in a continuous caster adopt standard fitting practices, which is to tight fit the bearing ring that rotates and to loose fit the stationary ring.

There are some exceptions, that can vary by supplier. For example, the foot roll bearings located immediately beneath the mold are often replaced on a regular schedule, regardless of condition. This process can be simplified by using loose or transition fits for the rotating ring of the bearing.

This exception also applies to split spherical roller bearings that are used for intermediate support of the driven segment rolls. These positions must be able to accommodate axial float because the roll will change in length according to temperature. This is achieved by loose fitting the bearing inner ring on the roll journal, allowing it to move back and forth through the bore of the bearing.

Mounting tools are highly recommended to ensure proper bearing installation and removal. Timken offers a full line of tools designed to help extend bearing life and ease maintenance practices. Induction heaters provide a fast, controlled and environmentally friendly heating method to aid in bearing mounting. Pullers are recommended for the removal of many kinds of shaft-fitted parts. Timken has a wide range of self-contained portable hydraulic pulling systems with capacities from four to 30 tons.

## Lubrication

Proper lubrication is critical to bearing and machine performance. Timken application and environment-specific grease lubricants have been developed from our knowledge of tribology, anti-friction bearings and how these two properties affect overall system performance. Timken offers a choice of premium ISO460 grease for continuous casters.

For continuous casters, the most widely used lubrication method is the centralized grease distribution system. Several separate systems are used serving a discrete caster section. These systems pump a relatively small amount of grease at frequent intervals to the bearing. The grease quantity is typically less than 5cc (0.3 $in^3$), but the frequency is typically six to 10 times per hour. This frequent cycle keeps the bearing full with fresh grease while also purging old grease and contaminants.

An alternative is the air-oil system, which uses compressed air to drive a film of oil through distribution pipes to the bearings. These systems operate continuously to keep fresh lubricant flowing while purging the bearing. The air-oil systems can operate with significantly reduced lubricant consumption. Consult with a Timken engineer for air-oil application.

The bearing positions associated with the support of the slab combine high loads and elevated temperatures with low rotational speed. This presents difficulties in creating a lubricant film between the bearing's rollers and raceways. A lubricant viscosity of more than 3000cSt/15000SUS would be required to maintain a lubricant film, but distribution systems are limited to a maximum of about 600cSt/2000SUS. High viscosity base oil greases in the segment positions must also be selected to resist corrosion and aid in sealing as a result of continuous exposure to secondary cooling water spray and hard debris contamination.

## Bearing Reclamation

With nearly 90 years of experience owning and operating our own steel mills, Timken understands the maintenance needs of today's mills from the inside out. We leverage this knowledge to develop and refine maintenance services for the primary metals industry that extend component life and lower costs per ton.

Developed for continuous caster bearings, Timken's bearing reclamation services are ideal for smaller bearings used in large quantities. Segment roll maintenance is expensive. Our bearing reclamation services can reduce your cost of operation by returning refurbished bearings to service for the fraction of the cost. Regardless of the original manufacturer or type of bearing, our services are backed by the Timken name and quality standards.

Our skilled repair specialists are experienced in recognizing various types of damage and the operating conditions that impact bearing performance. Our process begins with an initial inspection to determine the level of service required. Serviceable bearings are disassembled, run through our proprietary polishing agent, reassembled and preserved. Reclaimed bearings are then returned to the customer with a written report and one-year limited warranty. A typical turn-around time is generally two weeks or less.

***Timken's bearing reclamation services can reduce your cost of operation by returning refurbished bearings to service.***

*The bearing designs chosen for this catalog represent common products found in continuous casters. Contact your Timken sales representative or visit www.timken.com/catalogs to learn more about our complete line of products for your application.*

## Spherical Roller Bearings – Type CJ and YM

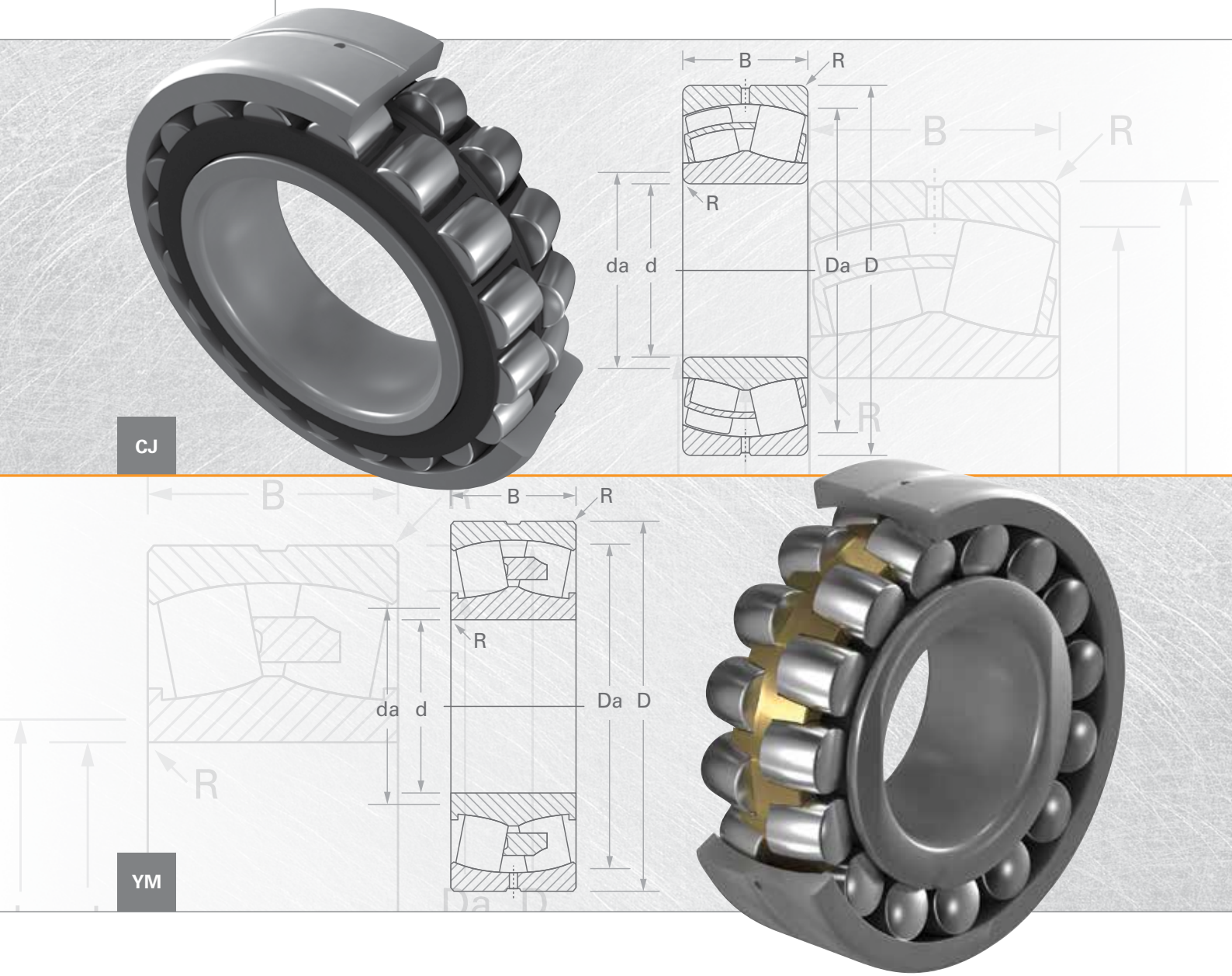

## Design Benefits:

- Advanced bearing steel offers improved cleanliness and heat stability for high load capacity and wear resistance.
- Rugged steel and brass retainers provide high static load capacity with maximum number of large rollers.
- Advanced geometry reduces friction and heat generation.
- Expanded internal clearance tolerates higher operating temperatures.
- Improved surface finishes promote lubrication at slow speeds.
- Plain O.D. outer ring option deters fractures from high static loads and impact.

## Nomenclature

**2-Row SRB** | **Cage** | **Mod. Codes** | **RIC**

**2** **23** **22** **K** **YM** **W33** **C3**

**Dimension Series**
Spherical roller bearings are defined by a series based on the width (0, 1, 2, 3, 4) and outside diameter (8, 9, 0, 1, 2, 3)

**Bore Code**
Small and medium bore sizes
Bore code x 5 = bore size in mm
[ex., BORE = 22 x 5 = 110 mm]

Large sizes
Bore code = bore size in mm
Example: 232/600YMBW507C08
[ex., BORE = 600 mm]

**Bore Style**
Two bore styles

For cylindrical bore, there is no designation in the part description

For tapered bore, a K will appear in the part description

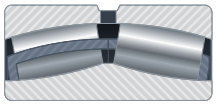
W33

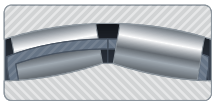
W841

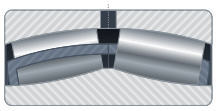
W901


W33W89

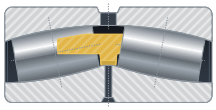
W33W94

## Modification Codes

| Timken | SKF | FAG | Timken General Definition |
|---|---|---|---|
| W20 | W20 | SY | Outer ring with standard lubrication holes |
| W31 | W31 | ****** | Bearing inspected to certain quality control requirements |
| W33 | W33 | S | Outer ring with standard lube groove and lube holes |
| W89 | W26 | H40AA | Inner ring with lube groove and lube holes, lube grooves in faces of retainer |
| W94 | W26 | H40A | Inner ring with lube holes, lube grooves in faces of retainer |
| W841 | ****** | ****** | Plain outer-ring O.D. (no lube groove or holes) plus W31 |
| C1 to C5 | C1 to C5 | C1 to C5 | Radial internal clearance code |
| K | K | K | Standard tapered bore (refer to Note 1) |
| Note 2 | S1 | S1 | Inner and outer rings stabilized for operation up to 200° C / 392° F |
| S2 | S2 | S2 | Inner and outer rings stabilized for operation up to 250° C / 482° F |
| S3 | S3 | S3 | Inner and outer rings stabilized for operation up to 300° C / 572° F |
| S4 | S4 | S4 | Inner and outer rings stabilized for operation up to 350° C / 662° F |

*Note 1: Standard taper for 222, 223, 230, 231, 232 and 239 series is 1:12*
*Standard taper for 248, 249, 240, 241 and 242 series is 1:30*
*Note 2: Timken standard heat stabilizing treatment is S1*

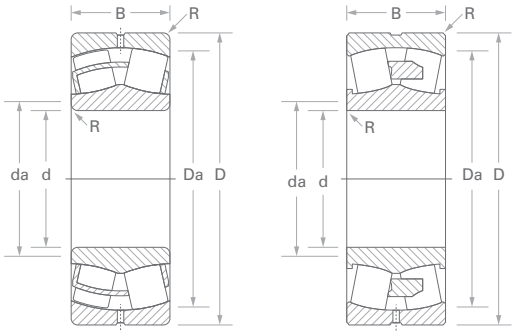


## Spherical Roller Bearings – Type CJ and YM

| Bearing Number | d Bore | D O.D. | B Width | R Fillet(1) (max) | Backing Diameter | | Load Ratings | |
|---|---|---|---|---|---|---|---|---|
| | | | | | $d_a$ Shaft | $D_a$ Housing | Static Load Rating $C_0$ | Dynamic Load Rating C |
| | mm | mm | mm | mm | mm | mm | kN | kN |
| 22205CJ | 25 | 52 | 18.0 | 1.0 | 30 | 47 | 43.0 | 44.0 |
| 22206CJ | 30 | 62 | 20.0 | 1.0 | 38 | 56 | 61.0 | 58.0 |
| 22207CJ | 35 | 72 | 23.0 | 1.0 | 45 | 65 | 88.0 | 78.0 |
| 22208CJ | 40 | 80 | 23.0 | 1.0 | 50 | 72 | 100 | 90.0 |
| 22308CJ | 40 | 90 | 33.0 | 1.5 | 53 | 81 | 148 | 133 |
| 22209CJ | 45 | 85 | 23.0 | 1.0 | 55 | 77 | 108 | 94.0 |
| 22209YM | 45 | 85 | 23.0 | 1.0 | 55 | 77 | 101 | 90.0 |
| 22309CJ | 45 | 100 | 36.0 | 1.5 | 58 | 90 | 182 | 162 |
| 22210CJ | 50 | 90 | 23.0 | 1.0 | 59 | 82 | 118 | 101 |
| 22310CJ | 50 | 110 | 40.0 | 2.0 | 64 | 98 | 226 | 197 |
| 22211CJ | 55 | 100 | 25.0 | 1.5 | 66 | 91 | 142 | 120 |
| 22311CJ | 55 | 120 | 43.0 | 2.0 | 69 | 107 | 248 | 221 |
| 22212CJ | 60 | 110 | 28.0 | 1.5 | 72 | 100 | 174 | 146 |
| 22312CJ | 60 | 130 | 46.0 | 2.0 | 75 | 117 | 312 | 269 |
| 22213CJ | 65 | 120 | 31.0 | 1.5 | 78 | 109 | 217 | 177 |
| 22313CJ | 65 | 140 | 48.0 | 2.0 | 82 | 126 | 333 | 290 |
| 22214CJ | 70 | 125 | 31.0 | 1.5 | 84 | 115 | 231 | 184 |
| 22314CJ | 70 | 150 | 51.0 | 2.0 | 87 | 131 | 385 | 331 |
| 22215CJ | 75 | 130 | 31.0 | 1.5 | 88 | 120 | 241 | 191 |
| 22315CJ | 75 | 160 | 55.0 | 2.0 | 93 | 140 | 456 | 387 |
| 22216CJ | 80 | 140 | 33.0 | 2.0 | 95 | 129 | 278 | 218 |
| 22316CJ | 80 | 170 | 58.0 | 2.0 | 97 | 148 | 510 | 427 |
| 22217CJ | 85 | 150 | 36.0 | 2.0 | 101 | 139 | 320 | 255 |
| 22317CJ | 85 | 180 | 60.0 | 2.5 | 106 | 158 | 591 | 474 |
| 22317YM | 85 | 180 | 60.0 | 2.5 | 106 | 158 | 591 | 474 |
| 22218CJ | 90 | 160 | 40.0 | 2.0 | 105 | 146 | 388 | 303 |
| 23218CJ | 90 | 160 | 52.0 | 2.0 | 104 | 146 | 504 | 369 |
| 22318CJ | 90 | 190 | 64.0 | 2.5 | 110 | 167 | 642 | 529 |
| 22219CJ | 95 | 170 | 43.0 | 2.0 | 112 | 152 | 383 | 289 |
| 22319CJ | 95 | 200 | 67.0 | 2.5 | 122 | 180 | 774 | 587 |
| 23120YM | 100 | 165 | 52.0 | 2.0 | 112 | 151 | 575 | 379 |
| 22220CJ | 100 | 180 | 46.0 | 2.0 | 119 | 160 | 484 | 373 |
| 23220YM | 100 | 180 | 60.3 | 2.0 | 118 | 165 | 646 | 463 |

*(1) Maximum shaft or housing fillet radius that bearing corners will clear*
*For additional information, visit www.timken.com/catalogs*

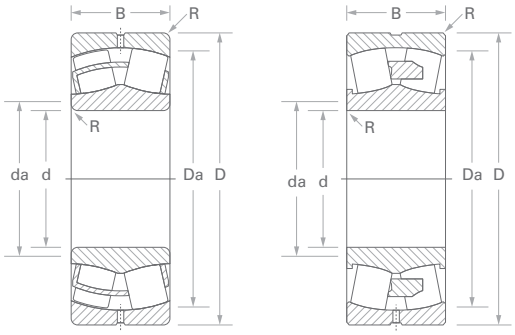


## Spherical Roller Bearings – Type CJ and YM

| Bearing Number | d Bore | D O.D. | B Width | R Fillet(1) (max) | Backing Diameter | | Load Ratings | |
|---|---|---|---|---|---|---|---|---|
| | | | | | $d_a$ Shaft | $D_a$ Housing | Static Load Rating $C_0$ | Dynamic Load Rating C |
| | mm | mm | mm | mm | mm | mm | kN | kN |
| 22320CJ | 100 | 215 | 73.0 | 2.5 | 125 | 187 | 756 | 586 |
| 23122CJ | 110 | 180 | 56.0 | 2.0 | 127 | 169 | 615 | 377 |
| 24122CJ | 110 | 180 | 69.0 | 2.0 | 124 | 164 | 676 | 448 |
| 22222YM | 110 | 200 | 53.0 | 2.0 | 132 | 179 | 627 | 475 |
| 23222YM | 110 | 200 | 69.8 | 2.0 | 130 | 183 | 853 | 596 |
| 22322YM | 110 | 240 | 80.0 | 2.5 | 139 | 208 | 962 | 733 |
| 23024CJ | 120 | 180 | 46.0 | 2.0 | 134 | 169 | 564 | 352 |
| 24024CJ | 120 | 180 | 60.0 | 2.0 | 131 | 164 | 642 | 393 |
| 23124CJ | 120 | 200 | 62.0 | 2.0 | 142 | 189 | 803 | 524 |
| 24124CJ | 120 | 200 | 80.0 | 2.0 | 136 | 181 | 923 | 590 |
| 22224CJ | 120 | 215 | 58.0 | 2.0 | 142 | 192 | 667 | 475 |
| 22324CJ | 120 | 260 | 86.0 | 2.5 | 151 | 225 | 1090 | 825 |
| 23026CJ | 130 | 200 | 52.0 | 2.0 | 146 | 187 | 703 | 446 |
| 24026CJ | 130 | 200 | 69.0 | 2.0 | 144 | 182 | 795 | 501 |
| 23126CJ | 130 | 210 | 64.0 | 2.0 | 149 | 195 | 888 | 562 |
| 24126CJ | 130 | 210 | 80.0 | 2.0 | 147 | 190 | 967 | 608 |
| 22226CJ | 130 | 230 | 64.0 | 2.5 | 152 | 206 | 805 | 562 |
| 22326CJ | 130 | 280 | 93.0 | 3.0 | 161 | 242 | 1270 | 952 |
| 23028CJ | 140 | 210 | 53.0 | 2.0 | 156 | 197 | 764 | 471 |
| 24028CJ | 140 | 210 | 69.0 | 2.0 | 154 | 192 | 899 | 527 |
| 23128YM | 140 | 225 | 68.0 | 2.0 | 159 | 209 | 1010 | 636 |
| 24128CJ | 140 | 225 | 85.0 | 2.0 | 156 | 203 | 1120 | 701 |
| 22228CJ | 140 | 250 | 68.0 | 2.5 | 166 | 225 | 930 | 646 |
| 22328CJ | 140 | 300 | 102.0 | 3.0 | 174 | 262 | 1520 | 1120 |
| 23030YM | 150 | 225 | 56.0 | 2.0 | 169 | 211 | 872 | 521 |
| 24030CJ | 150 | 225 | 75.0 | 2.0 | 166 | 206 | 1000 | 603 |
| 23130YM | 150 | 250 | 80.0 | 2.0 | 172 | 230 | 1320 | 837 |
| 24130CJ | 150 | 250 | 100.0 | 2.0 | 169 | 225 | 1400 | 901 |
| 22230CJ | 150 | 270 | 73.0 | 2.5 | 179 | 242 | 1100 | 752 |
| 23230YM | 150 | 270 | 96.0 | 2.5 | 175 | 247 | 1590 | 1060 |
| 22330CJ | 150 | 320 | 108.0 | 3.0 | 186 | 280 | 1720 | 1260 |
| 23032YM | 160 | 240 | 60.0 | 2.0 | 179 | 225 | 979 | 591 |
| 24132CJ | 160 | 270 | 109.0 | 2.0 | 181 | 248 | 1736 | 1069 |

*(1) Maximum shaft or housing fillet radius that bearing corners will clear*
*For additional information, visit www.timken.com/catalogs*

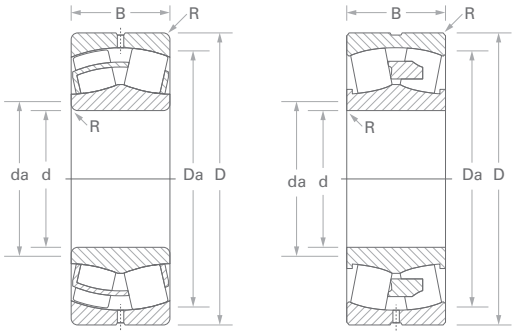


## Spherical Roller Bearings – Type CJ and YM

| Bearing Number | d Bore | D O.D. | B Width | R Fillet(1) (max) | Backing Diameter | | Load Ratings | |
|---|---|---|---|---|---|---|---|---|
| | | | | | $d_a$ Shaft | $D_a$ Housing | Static Load Rating $C_0$ | Dynamic Load Rating C |
| | mm | mm | mm | mm | mm | mm | kN | kN |
| 24032CJ | 160 | 240 | 80.0 | 2.0 | 173 | 224 | 1100 | 665 |
| 23132YM | 160 | 270 | 86.0 | 2.0 | 189 | 244 | 1560 | 968 |
| 22232CJ | 160 | 290 | 80.0 | 2.5 | 192 | 260 | 1280 | 864 |
| 23232YM | 160 | 290 | 104.0 | 2.5 | 187 | 260 | 1680 | 1090 |
| 22332CJ | 160 | 340 | 114.0 | 3.0 | 198 | 298 | 1920 | 1400 |
| 23034YM | 170 | 260 | 67.0 | 2.0 | 192 | 243 | 1220 | 724 |
| 24034CJ | 170 | 260 | 90.0 | 2.0 | 185 | 242 | 1430 | 851 |
| 23134YM | 170 | 280 | 88.0 | 2.0 | 194 | 255 | 1670 | 1010 |
| 24134CJ | 170 | 280 | 109.0 | 2.0 | 191 | 252 | 1840 | 1110 |
| 22234CJ | 170 | 310 | 86.0 | 3.0 | 201 | 278 | 1450 | 999 |
| 23234YM | 170 | 310 | 110.0 | 3.0 | 200 | 276 | 1960 | 1240 |
| 23036YM | 180 | 280 | 74.0 | 2.0 | 204 | 261 | 1420 | 851 |
| 24036CJ | 180 | 280 | 100.0 | 2.0 | 198 | 260 | 1700 | 992 |
| 23136YM | 180 | 300 | 96.0 | 2.5 | 205 | 273 | 1810 | 1100 |
| 24136CJ | 180 | 300 | 118.0 | 2.5 | 201 | 275 | 2050 | 1250 |
| 22236CJ | 180 | 320 | 86.0 | 3.0 | 213 | 288 | 1540 | 1030 |
| 23236YM | 180 | 320 | 112.0 | 3.0 | 209 | 288 | 2110 | 1330 |
| 22336YMB | 180 | 380 | 126.0 | 3.0 | 222 | 334 | 2460 | 1760 |
| 23038YM | 190 | 290 | 75.0 | 2.0 | 213 | 271 | 1540 | 901 |
| 24038CJ | 190 | 290 | 100.0 | 2.0 | 211 | 264 | 1810 | 957 |
| 23138YM | 190 | 320 | 104.0 | 2.5 | 218 | 290 | 2090 | 1250 |
| 24138CJ | 190 | 320 | 128.0 | 2.5 | 211 | 286 | 2310 | 1350 |
| 22238YM | 190 | 340 | 92.0 | 3.0 | 224 | 306 | 1810 | 1200 |
| 23238YM | 190 | 340 | 120.0 | 3.0 | 221 | 306 | 2390 | 1490 |
| 22338YMB | 190 | 400 | 132.0 | 4.0 | 236 | 350 | 2730 | 1900 |
| 23040YM | 200 | 310 | 82.0 | 2.0 | 225 | 289 | 1760 | 1040 |
| 24040CJ | 200 | 310 | 109.0 | 2.0 | 223 | 284 | 2080 | 1120 |
| 23140YM | 200 | 340 | 112.0 | 2.5 | 230 | 308 | 2300 | 1390 |
| 24140YMB | 200 | 340 | 140.0 | 2.5 | 226 | 308 | 2950 | 1690 |
| 22240YMB | 200 | 360 | 98.0 | 3.0 | 236 | 323 | 2030 | 1330 |
| 23240YM | 200 | 360 | 128.0 | 3.0 | 233 | 323 | 2720 | 1670 |
| 22340YMB | 200 | 420 | 138.0 | 4.0 | 247 | 369 | 2950 | 2070 |
| 23044YM | 220 | 340 | 90.0 | 2.5 | 247 | 313 | 1990 | 1130 |

*(1) Maximum shaft or housing fillet radius that bearing corners will clear*
*For additional information, visit www.timken.com/catalogs*

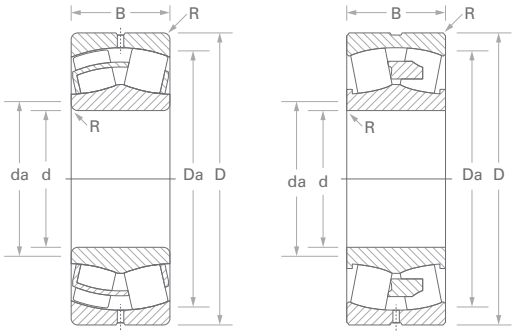


## Spherical Roller Bearings – Type CJ and YM

| Bearing Number | d Bore | D O.D. | B Width | R Fillet(1) (max) | Backing Diameter | | Load Ratings | |
|---|---|---|---|---|---|---|---|---|
| | | | | | $d_a$ Shaft | $D_a$ Housing | Static Load Rating $C_0$ | Dynamic Load Rating C |
| | mm | mm | mm | mm | mm | mm | kN | kN |
| 24044YM | 220 | 340 | 118.0 | 2.5 | 245 | 313 | 2740 | 1450 |
| 23144YM | 220 | 370 | 120.0 | 3.0 | 252 | 336 | 2760 | 1630 |
| 24144YMB | 220 | 370 | 150.0 | 3.0 | 248 | 337 | 3250 | 1870 |
| 22244YMB | 220 | 400 | 108.0 | 3.0 | 261 | 359 | 2330 | 1550 |
| 23244YM | 220 | 400 | 144.0 | 3.0 | 257 | 359 | 3380 | 2080 |
| 22344YMB | 220 | 460 | 145.0 | 4.0 | 273 | 404 | 3490 | 2400 |
| 23048YM | 240 | 360 | 92.0 | 2.5 | 267 | 334 | 2150 | 1180 |
| 24048YM | 240 | 360 | 118.0 | 2.5 | 265 | 334 | 2920 | 1500 |
| 23148YMB | 240 | 400 | 128.0 | 3.0 | 276 | 364 | 3200 | 1850 |
| 24148YMB | 240 | 400 | 160.0 | 3.0 | 271 | 364 | 4090 | 2250 |
| 22248YMB | 240 | 440 | 120.0 | 3.0 | 284 | 395 | 2970 | 1960 |
| 23248YM | 240 | 440 | 160.0 | 3.0 | 281 | 394 | 4190 | 2540 |
| 22348YMB | 240 | 500 | 155.0 | 4.0 | 297 | 439 | 3990 | 2740 |
| 23052YM | 260 | 400 | 104.0 | 3.0 | 291 | 369 | 2770 | 1540 |
| 24052YM | 260 | 400 | 140.0 | 3.0 | 288 | 369 | 3870 | 1990 |
| 23152YMB | 260 | 440 | 144.0 | 3.0 | 302 | 400 | 3970 | 2240 |
| 24152YMB | 260 | 440 | 180.0 | 3.0 | 296 | 398 | 4840 | 2630 |
| 22252YMB | 260 | 480 | 130.0 | 4.0 | 309 | 430 | 3530 | 2300 |
| 23252YM | 260 | 480 | 174.0 | 4.0 | 308 | 430 | 4880 | 2930 |
| 22352YMB | 260 | 540 | 165.0 | 5.0 | 321 | 475 | 4590 | 3130 |
| 23056YMB | 280 | 420 | 106.0 | 3.0 | 312 | 389 | 2830 | 1540 |
| 24056YMB | 280 | 420 | 140.0 | 3.0 | 310 | 388 | 4130 | 2030 |
| 23156YMB | 280 | 460 | 146.0 | 4.0 | 320 | 419 | 4200 | 2330 |
| 24156YMB | 280 | 460 | 180.0 | 4.0 | 319 | 419 | 5100 | 2670 |
| 22256YMB | 280 | 500 | 130.0 | 4.0 | 331 | 449 | 3780 | 2360 |
| 23256YMB | 280 | 500 | 176.0 | 4.0 | 329 | 450 | 5290 | 3070 |
| 22356YMB | 280 | 580 | 175.0 | 5.0 | 345 | 511 | 5320 | 3590 |
| 23060YMB | 300 | 460 | 118.0 | 3.0 | 336 | 425 | 3600 | 1970 |
| 24060YMB | 300 | 460 | 160.0 | 3.0 | 334 | 423 | 5230 | 2560 |
| 23160YMB | 300 | 500 | 160.0 | 4.0 | 345 | 453 | 5160 | 2810 |
| 24160YMB | 300 | 500 | 200.0 | 4.0 | 338 | 455 | 6320 | 3380 |
| 22260YMB | 300 | 540 | 140.0 | 4.0 | 355 | 484 | 4430 | 2760 |
| 23260YMB | 300 | 540 | 192.0 | 4.0 | 353 | 482 | 6210 | 3510 |

*(1) Maximum shaft or housing fillet radius that bearing corners will clear*
*For additional information, visit www.timken.com/catalogs*

# Split Spherical and Cylindrical Roller Bearings and Housing Assemblies

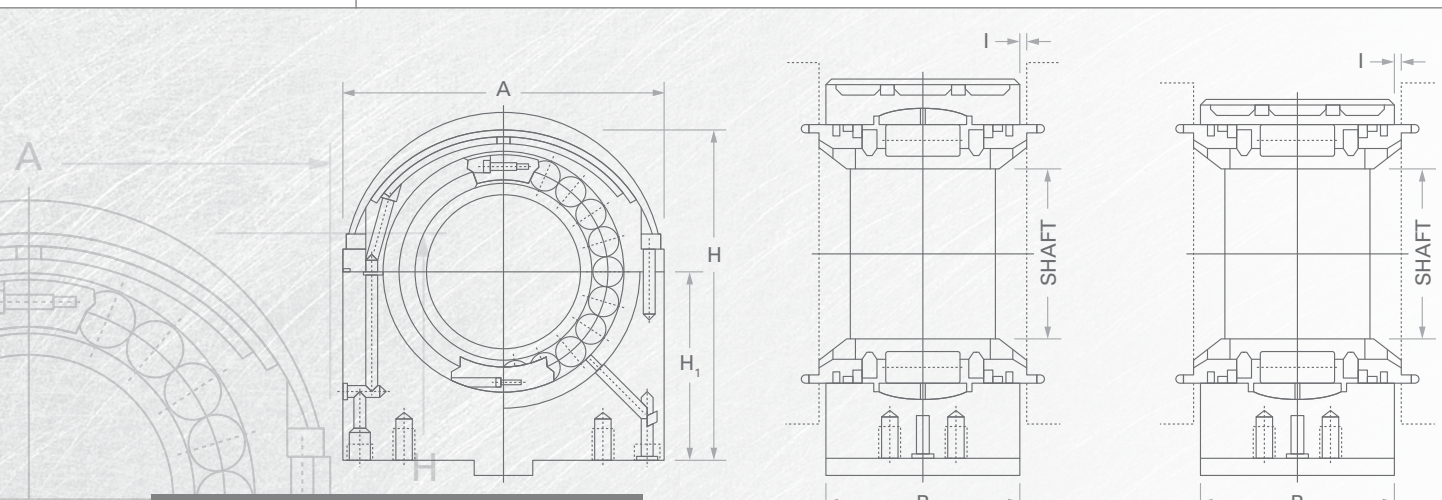


RADIAL CYLINDRICAL ASSEMBLIES

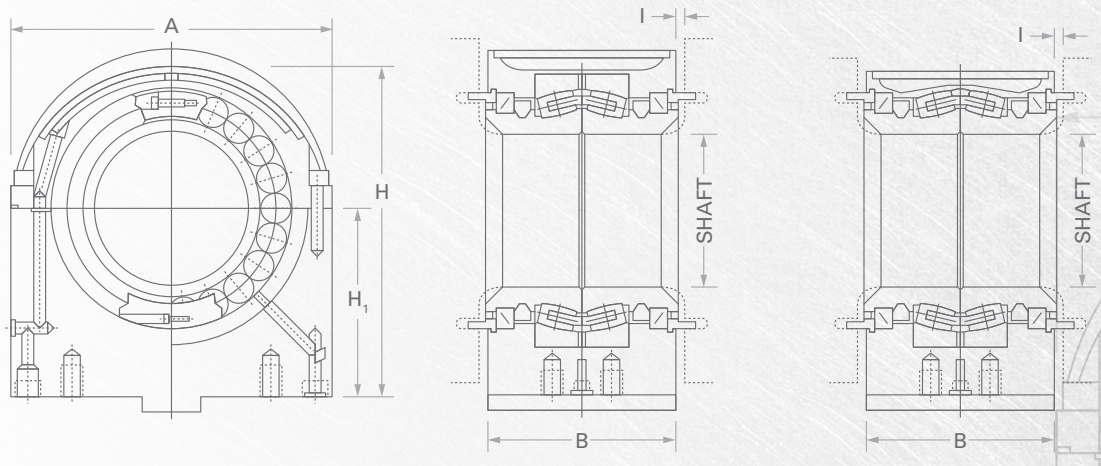


RADIAL SPHERICAL ASSEMBLIES

## Design Benefits:

- Engineered specifically for challenging continuous slab caster environment.
- Available as full complement cylindrical or caged spherical roller bearings. The spherical bearing characteristics accommodate normal levels of misalignment. In cylindrical roller bearing assemblies, the housing accommodates misalignment.
- "Half-outer" ring design reduces cap height to maximize clearance between the cast slab.
- Water-cooled housings utilize Timken's patented cooling chamber design, which maximizes the cooling area without introducing dead zones and subsequent hot spots.
- Triple sealing elements protect the bearing from contamination while also allowing lubricant purging in centralized grease and air-oil type systems.
- Super-finished rollers and races for improved operation at extremely slow speeds.

## Nomenclature

**Bearing Bore (mm)**

S = Spherical

C = Cylindrical

**Modification Letter(s)**

N = Nickel plated housing

2nd Letter = Bore width

130 | S | HSGA | 1734 | N

HSGA = Housing assembly complete

HSG = Housing only

SLP = Seal kit

CB = Bearing

**Series Number**

Based on integral geometry, always four digits

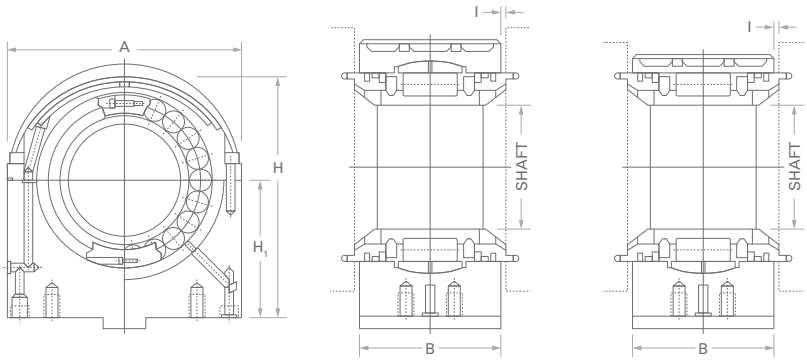


## Radial Cylindrical Assemblies

| Housing Numbers | Shaft Dia. | A (max.) Width | B (max.) Length | H (max.) Height | $H_1$ Shaft Height | I Side Clearance |
|---|---|---|---|---|---|---|
| | mm | mm | mm | mm | mm | mm |
| 75CHSGA0610 | 75 | 175 | 59 | 202 | 130 | 3 |
| 75CHSGA0611 | 75 | 175 | 66 | 202 | 130 | 5 |
| 75CHSGA0914 | 75 | 175 | 94 | 202 | 130 | 5 |
| 90CHSGA0610 | 90 | 190 | 59 | 217 | 137.5 | 3 |
| 90CHSGA0611 | 90 | 190 | 66 | 217 | 137.5 | 5 |
| 90CHSGA1016 | 90 | 190 | 108 | 217 | 137.5 | 7.5 |
| 110CHSGA1320 | 110 | 240 | 134 | 275 | 175 | 6 |
| 130CHSGA1323 | 130 | 270 | 150 | 291 | 175 | 7 |
| 130CHSGA1323A | 130 | 270 | 150 | 291 | 175 | 7 |
| 140CHSGA1216 | 140 | 271 | 140 | 310 | 180 | 10 |
| 140CHSGA1423 | 140 | 235 | 129 | 283 | 175 | 8.5 |
| 145CHSGA1624 | 145 | 300 | 170 | 306 | 175 | 7.5 |
| 150CHSGA1318 | 150 | 291 | 150 | 330 | 190 | 10 |
| 150CHSGA1624 | 150 | 300 | 170 | 306 | 175 | 7.5 |
| 150CHSGA2031 | 150 | 330 | 180 | 363 | 220 | 9 |
| 160CHSGA1722 | 160 | 311 | 170 | 370 | 220 | 10 |
| 160CHSGA1726 | 160 | 320 | 180 | 353 | 210 | 2 |

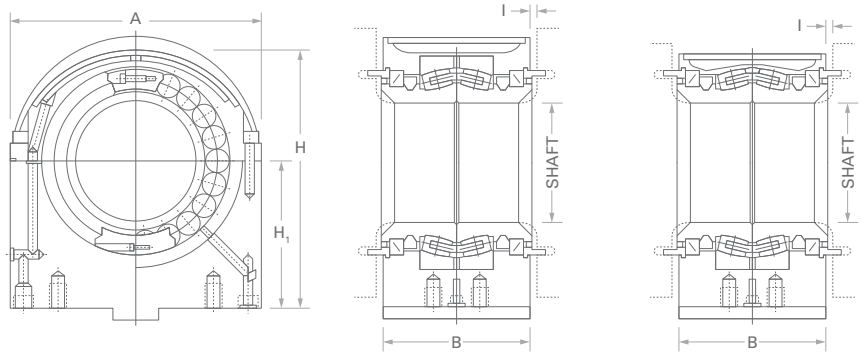


## Radial Spherical Assemblies

| Housing Numbers | Shaft Dia. | A (max.) Width | B (max.) Length | H (max.) Height | $H_1$ Shaft Height | I Side Clearance |
|---|---|---|---|---|---|---|
| | mm | mm | mm | mm | mm | mm |
| 120SHSGA1218 | 120 | 270 | 132 | 290 | 170 | 1.5 |
| 120SHSGA1522 | 120 | 233.7 | 144 | 290 | 181 | 8 |
| 130SHSGA1521 | 130 | 290 | 144 | 310 | 180 | 1.5 |
| 130SHSGA1526 | 130 | 265 | 170 | 275 | 160 | 7.5 |
| 130SHGA1725 | 130 | 270 | 130 | 260 | 145 | 7 |
| 130SHSGA1734 | 130 | 270 | 170 | 298 | 180 | 8 |
| 140SHSGA1628 | 140 | 285 | 175 | 285 | 160 | 7.5 |
| 140SHSGA1723 | 140 | 310 | 153 | 330 | 190 | 2 |
| 140SHSGA1725 | 140 | 265 | 163 | 323.75 | 202.5 | 11 |
| 140SHSGA1935 | 140 | 285 | 175 | 318 | 192.5 | 8 |
| 150SHSGA1936 | 150 | 305 | 180 | 333 | 202.5 | 8 |
| 150SHSGA1936EN | 150 | 305 | 180 | 336 | 205 | 8 |
| 150SHSGA2129 | 150 | 327.5 | 182 | 367.5 | 210 | 2.5 |
| 160SHSGA1729 | 160 | 310 | 185 | 310 | 170 | 7.5 |
| 160SHSGA2028 | 160 | 290 | 178 | 348.75 | 215 | 11 |
| 160SHSGA2030 | 160 | 310 | 176 | 310 | 170 | 7 |
| 160SHSGA2037 | 160 | 330 | 185 | 365 | 225 | 8 |
| 160SHSGA2037AN | 160 | 330 | 185 | 365 | 225 | 8 |
| 170SHSGA2139 | 170 | 345 | 195 | 383 | 230 | 8 |

# Needle Roller Bearings - NA49 and NA69

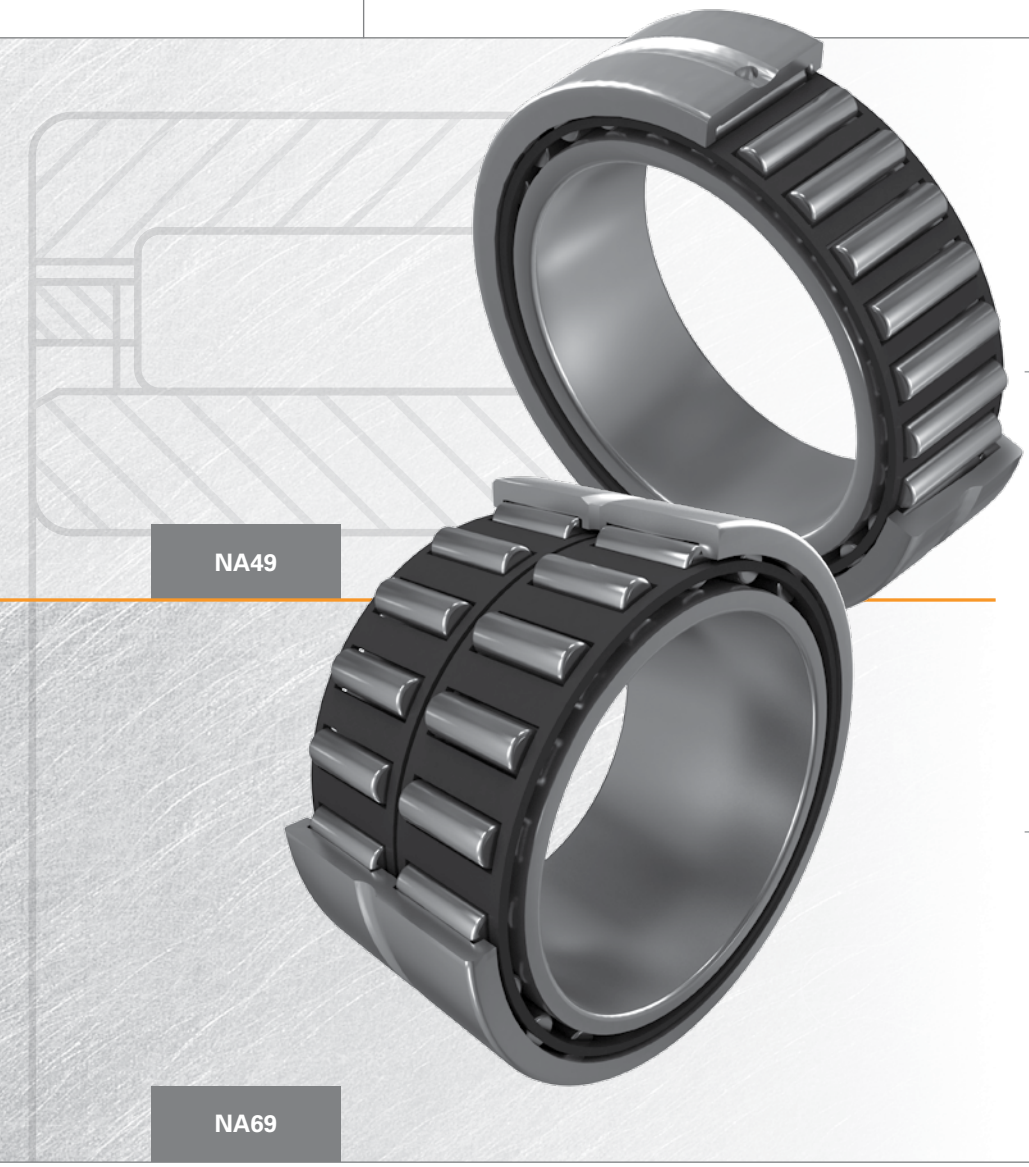


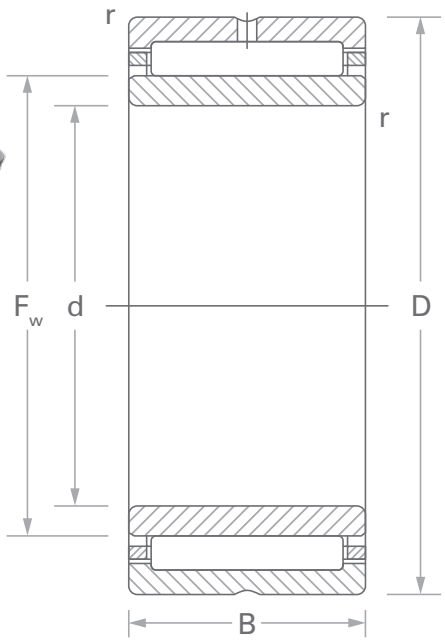

## Design Benefits:

- Available in single row construction (series 49) and double row construction (series 69).
- Meets ISO standard 492 covering radial bearings. Radial internal clearance is in accordance with ISO Standard 5753.
- Low radial cross section with high radial dynamic and static load rating. Must be used with an axial bearing.
- Available with special clearance and higher stabilizing heat treatment to accommodate conditions normally found in continuous casters.
- Steel cage improves roller guidance and lubricating grease capacity. Available as sealed assembly (single or double) 110˚ C / 230˚ F maximum continuous operating temperature.
- Lubricating groove and holes in outer ring improve grease flow.

## Nomenclature

**Prefix**

NA: Needle roller bearing with inner ring

NJK: Needle roller bearing with inner ring

NJKS: Needle roller bearing with inner ring

NAO: Needle roller bearing with inner ring, without flanges

**Inner Ring Bore Diameter**

(for NA49, NA69: <17 mm bore)

| | | | |
|---|---|---|---|
| 00 | 10 mm | 00 | 10 mm |
| 01 | 12 mm | 00 | 10 mm |

(for NA48, NA49, NA69: ≥20 mm bore)
bore code x 5 = bore diameter

**NA 49 04 .2RS**

**Series**

48: Dimension series 48

49: Dimension series 49

69: Dimension series 69

**Suffix**

RS: Lip contact seal on one side

.2RS: Lip contact seal on both sides

TN: Molded cage of reinforced polymer

## Modification Codes

| Timken | SKF | FAG | Timken General Definition |
|---|---|---|---|
| .200.250 | .200.250 | .200.250 | Special radial internal clearance .min.max (micron) |
| .RS | .RS | .RS | One seal, nitrile rubber |
| .2RS | .2RS | .2RS | Two seals |
| S3 | S3 | S3 | Inner and outer rings stabilized for operation up to 300° C / 572° F |
| S4 | S4 | S4 | Inner and outer rings stabilized for operation up to 350° C / 662° F |
| TH | TH | TH | Molded cage of reinforced polymer |

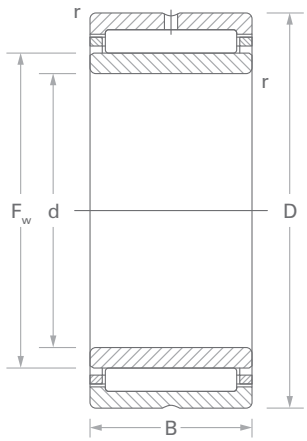


## Needle Roller Bearings - NA49 and NA69

| Dimensions mm | | | | | | Bearing Designation | Load Ratings kN | |
|---|---|---|---|---|---|---|---|---|
| | | | | | | | Dynamic | Static |
| d | D | B | $F_w$ | $r_s$ min | s(1) | | C | $C_0$ |
| 25 | 42 | 17 | 30 | 0.3 | 1.5 | NA4905 | 24.3 | 31.7 |
| 25 | 42 | 30 | 30 | 0.3 | 1.5 | NA6905 | 39.7 | 59.6 |
| 28 | 45 | 17 | 32 | 0.3 | 1.5 | NA49/28 | 25.1 | 33.8 |
| 28 | 45 | 30 | 32 | 0.3 | 1.5 | NA69/28 | 37.1 | 55.4 |
| 30 | 47 | 17 | 35 | 0.3 | 1.5 | NA4906 | 25.9 | 36 |
| 30 | 47 | 30 | 35 | 0.3 | 1 | NA6906 | 42.6 | 68.2 |
| 32 | 52 | 20 | 40 | 0.6 | 1.5 | NA49/32 | 32 | 49.3 |
| 32 | 52 | 36 | 40 | 0.6 | 1 | NA69/32 | 48.6 | 84.5 |
| 35 | 55 | 20 | 42 | 0.6 | 1.5 | NA4907 | 32.8 | 51.7 |
| 35 | 55 | 36 | 42 | 0.6 | 1 | NA6907 | 49.9 | 88.7 |
| 40 | 62 | 22 | 48 | 0.6 | 1.5 | NA4908 | 44.2 | 67.8 |
| 40 | 62 | 40 | 48 | 0.6 | 1.5 | NA6908 | 70.8 | 124 |
| 45 | 68 | 22 | 52 | 0.6 | 2 | NA4909 | 46.8 | 74.8 |
| 45 | 68 | 40 | 52 | 0.6 | 1.5 | NA6909 | 74.7 | 137 |
| 50 | 72 | 22 | 58 | 0.6 | 2 | NA4910 | 48.9 | 82 |
| 50 | 72 | 40 | 58 | 0.6 | 1.5 | NA6910 | 75.7 | 144 |
| 55 | 80 | 25 | 63 | 1 | 2.5 | NA4911 | 62 | 107 |

*(1) See engineering section of the Timken Products Catalog for instructions on use*
*For additional information, visit www.timken.com/catalogs*

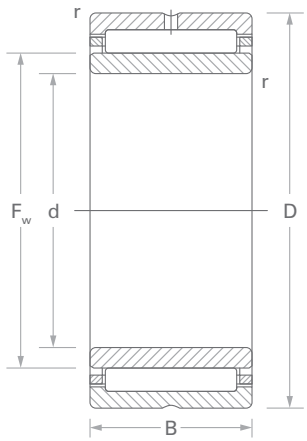


## Needle Roller Bearings - NA49 and NA69

| Dimensions mm | | | | | | Bearing Designation | Load Ratings kN | |
|---|---|---|---|---|---|---|---|---|
| | | | | | | | Dynamic | Static |
| d | D | B | $F_w$ | $r_s$ min | s(1) | | C | $C_0$ |
| 55 | 80 | 45 | 63 | 1 | 2.5 | NA6911 | 94.2 | 172 |
| 60 | 85 | 25 | 68 | 1 | 1.5 | NA4912 | 64.8 | 116 |
| 60 | 85 | 45 | 68 | 1 | 2 | NA6912 | 99.3 | 189 |
| 65 | 90 | 25 | 72 | 1 | 1.5 | NA4913 | 66 | 121 |
| 65 | 90 | 45 | 72 | 1 | 2 | NA6913 | 107 | 213 |
| 70 | 100 | 30 | 80 | 1 | 2.5 | NA4914 | 86.3 | 157 |
| 70 | 100 | 54 | 80 | 1 | 2 | NA6914 | 137 | 286 |
| 75 | 105 | 30 | 85 | 1 | 2.5 | NA4915 (2) | 92.4 | 175 |
| 75 | 105 | 54 | 85 | 1 | 2 | NA6915 | 143 | 308 |
| 80 | 110 | 30 | 90 | 1 | 2.5 | NA4916 | 91.5 | 176 |
| 80 | 110 | 54 | 90 | 1 | 2 | NA6916 | 126 | 320 |
| 85 | 120 | 30 | 100 | 1.1 | 2.5 | NA4917 | 110 | 230 |
| 85 | 120 | 63 | 100 | 1.1 | 2 | NA6917 | 150 | 416 |
| 90 | 125 | 35 | 105 | 1.1 | 2.5 | NA4918 | 114 | 245 |
| 90 | 125 | 63 | 105 | 1.1 | 2 | NA6918 | 175 | 427 |

*(1) See engineering section of the Timken Products Catalog for instructions on use*
*(2) Equivalent to part number AJ64029/RA64029*
*For additional information, visit www.timken.com/catalogs*

## SAF Pillow Blocks

*Contact your Timken representative to learn more about our complete line of SAF pillow blocks, AP bearings and cylindrical roller bearings for continuous caster applications.*

SAF Pillow Blocks

### Design Benefits:

- Convenient split design facilitates assembly and disassembly.
- Timken spherical roller bearings develop maximum load capacity and can handle dynamic misalignment.
- Precision machined housing seat provides even load distribution and dependable float mountings.
- Can accommodate both inch and metric shafting.
- Allows grease or oil bath and can be easily adapted to circulating oil systems.
- Wide range of innovative designs provides effective sealing for different conditions and speeds.
- Timken engineers can help optimize performance for standard to specialized applications.
- Can accommodate condition monitoring and temperature sensors.

## AP™ Bearings

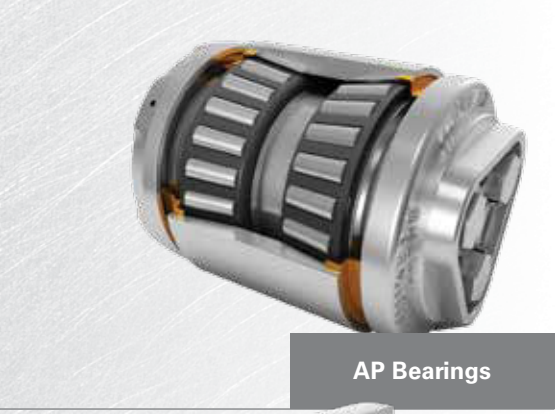

AP Bearings

### Design Benefits:

- Self-contained, sealed and compact assembly offers savings in design and installation.
- Two-row tapered roller bearing configuration provides high dynamic and static radial load capacity together with thrust capacity.
- Case-carburized bearing components combine durable rolling surfaces with a ductile core to offer fracture toughness and wear and fatigue resistance.
- Large range of accessories and options facilitates flexibility in machine design.
- Assemblies are repairable, offering operational cost savings.

## Cylindrical Roller Bearings

NNCF Bearings

### Design Benefits:

- Single and double-row, full-complement cylindrical roller bearings (example NNCF5008 DA.V.C4.S3).
- Features include integral flanges on the inner and outer rings.
- Can manage axial loads in one direction and permit small axial displacements.
- Lubricating groove and holes in outer ring improve grease flow.

***Timken's friction management solutions for the primary metals industry extend beyond the bearing. From condition monitoring equipment to industrial greases, our full portfolio of related products and services are designed to boost your mill's productivity and increase bearing life.***

## Related Friction Management Solutions


### Condition Monitoring

Timken's industrial portfolio of integrated services help customers to monitor and improve overall system performance. Our line of condition monitoring equipment evaluates the condition of a bearing, lubrication quality and machine vibration to identify potential system issues before bearing damage occurs.

### Industrial Seals

Timken's line of seals feature a leading combination of quality, technology and coverage. These seals are developed using innovative material and process solutions to help protect machinery, prevent contamination and minimize plant downtime.

### Lubricators

Timken G-Power and M-Power single-point lubricators deliver periodic grease or oil to bearings and other industrial equipment components. C-Power multi-point lubricators are a centralized lubrication system capable of delivering grease to up to six lubrication points. A full line of accessories offer easy installation and a host of mounting options for hard-to-reach locations.

### Industrial Greases

Timken has a broad range of application and environment-specific grease lubricants, developed by leveraging our knowledge of tribology, anti-friction bearings, and how these two properties affect overall system performance.

### Maintenance Tools

Timken understands the importance of proper maintenance procedures in maximizing product and equipment life. High-quality Timken maintenance tools help to extend bearing life in your application through proper installation, removal and service.

### Customer Training

From mounting and advanced setting techniques to maintenance and damage analysis, Timken training seminars can provide practical hands-on knowledge and a comprehensive understanding of proper maintenance practices.

***The Timken Company keeps the world turning, with innovative friction management and power transmission products and services, enabling our customers to perform faster and more efficiently.***

***Timken is your source for continuous caster solutions. For more information, contact your Timken representative or visit timken.com.***

*Front cover photo courtesy of SMS Demag.*



TIMKEN

The Timken team applies their know-how to improve the reliability and performance of machinery in diverse markets worldwide. The company designs, makes and markets high-performance mechanical components, including bearings, gears, belts, chain and related mechanical power transmission products and services.

Stronger. **Commitment.** Stronger. **Value.** Stronger. **Worldwide.** Stronger. **Together.** | **Stronger.** By Design.

**www.timken.com**