# Pre-Adjusted Wheel Ends with Spacers Require Controlled Width Bearings




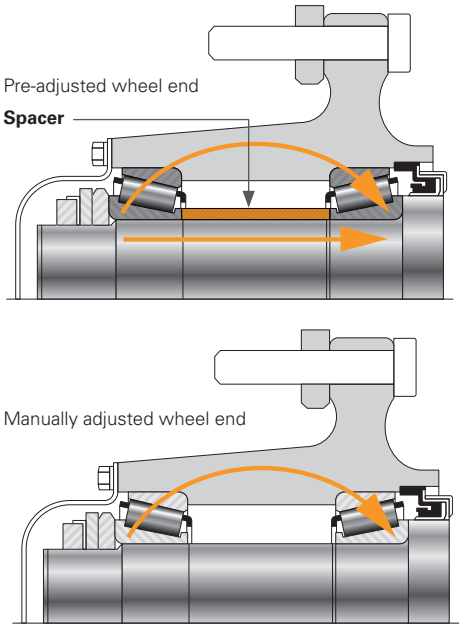


**Fig. 1:** Comparison of a pre-adjusted wheel end (with spacer) and a manually adjusted wheel end (no spacer)



**Fig. 2:** Common types of spacers

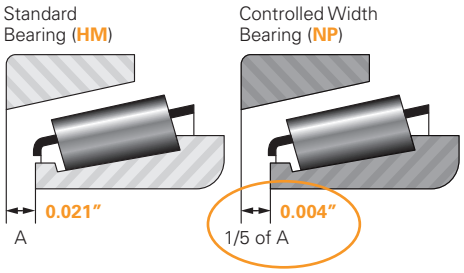


**Fig. 3:** Comparison of a standard and a controlled width bearing

Pre-adjusted wheel ends (Fig. 1) use a spacer (Fig. 2) and tightly controlled tolerances among the bearings, spacer and hub to create the bearing setting.

**When using a spacer, you must use the correct bearings (controlled width) or the bearing setting will be too loose or tight — potentially causing seal leaks, tire wear, hub burn up or wheel separation.**

Timken® Set-Right® bearings are controlled width bearings (Fig. 3) with unique NP part numbers (i.e. NP840302) to clearly differentiate them from traditional bearings (i.e. 580) and to help reduce the chance of improper installation. **Set-Right bearings are engineered to help achieve proper bearing setting with spacers.**

**Skill Level: Intermediate | Special Tools: None**

TIMKEN

Visit www.timken.com/techseriespro
to enroll in free technical training.

## WHEEL-END COMPONENT PERFORMANCE




Bearing setting too loose = excessive endplay that can lead to seal leakage or tire wear
Bearing setting too tight = excessive preload that can lead to hub burn up or wheel separation

## IMPROVED BEARING LIFE

**WARNING:** Never use standard bearings with a spacer as they will double the possible setting range.

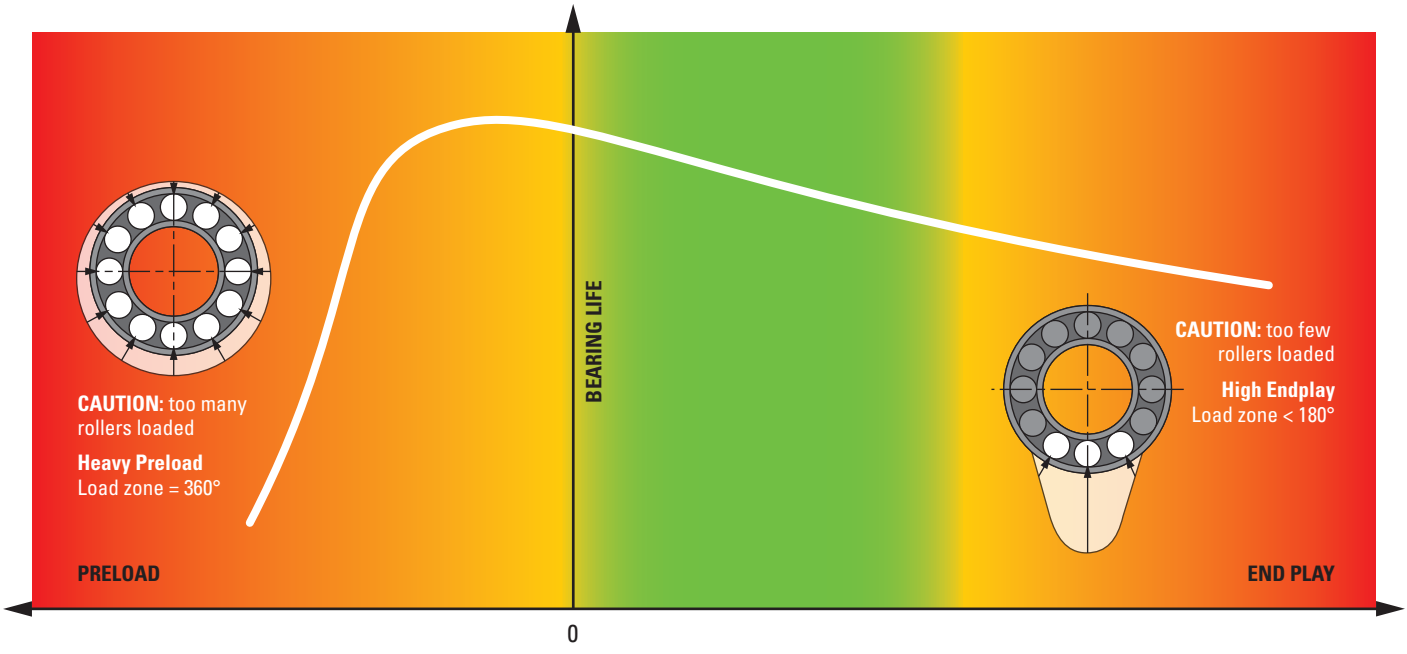


**RED SHADED AREAS HAVE A HIGHER LIKELIHOOD OF:** Hub burn up, seal leaks, tire wear, wheel seperation

## WHEEL BEARING PART NUMBERS FOR HUBS WITH AND WITHOUT SPACERS

| | | | SPACER | | | | NO SPACER | |
|---|---|---|---|---|---|---|---|---|
| | Position | Type | Reduced Width | Reduced Width Sets | Reduced Width Kits with Both Inner and Outer Bearing and Spacer | | Standard P/N | Standard Sets |
| FF (Steer) | Inner | Bearing | NP899357 | Set 427 | FFTC1 | FF Steer Kit | HM212049 | Set 413 |
| | | Race | NP026773 | Set 427 | Set 427 | 1 | HM212011 | Set 413 |
| | Outer | Bearing | NP874005 | Set 428 | Set 428 | 1 | 3782 | Set 406 |
| | | Race | NP435398 | Set 428 | Spacer 103592 | 1 | 3720 | Set 406 |
| FL (Steer) | Inner | Bearing | NP294109 | Set 445 | FLTC1 | FL Steer Kit | 6461A | Set 423 |
| | | Race | NP039695 | Set 445 | Set 445 | 1 | 6420 | Set 423 |
| | Outer | Bearing | NP107091 | Set 446 | Set 446 | 1 | 555-S | Set 424 |
| | | Race | NP183330 | Set 446 | Spacer 103807 | 1 | 552A | Set 424 |
| R (Drive) | Inner | Bearing | NP034946 | Set 429 | RDTC1 | R Drive Kit | 594A | Set 403 |
| | | Race | NP363298 | Set 429 | Set 429 | 1 | 592A | Set 403 |
| | Outer | Bearing | NP840302 | Set 430 | Set 430 | 1 | 580 | Set 401 |
| | | Race | NP053874 | Set 430 | Spacer 103593 | 1 | 572 | Set 401 |
| TN (Trailer) | Inner | Bearing | NP965350 | Set 431 | TNTC1 | N Trailer Kit | HM218248 | Set 414 |
| | | Race | NP503727 | Set 431 | Set 431 | 1 | HM218210 | Set 414 |
| | Outer | Bearing | NP899357 | Set 427 | Set 427 | 1 | HM212049 | Set 413 |
| | | Race | NP026773 | Set 427 | Spacer 104144 | 1 | HM212011 | Set 413 |
| TP (Trailer) | Inner/ Outer | Bearing | NP174964 | Set 432 | TPTC1 | P Trailer Kit | HM518445 | Set 415 |
| | | Race | NP593561 | Set 432 | Set 432 | 2 | HM518410 | Set 415 |
| | | | | | Spacer 104412 | 1 | | |
| | | | Controlled Width Bearings | | | | Standard Bearings | |

# CONMET TO TIMKEN WHEEL BEARING INTERCHANGE

## PreSet / PreSet Plus Hub Bearing Sets

| | TIMKEN | | | | | |
|---|---|---|---|---|---|---|
| **Application** | **Set No.** | **Cup / Cone No.** | **454 Set No.** | **454 Cup / Cone No.** | **Conmet No.** | **Hyatt Cup / Cone No.** |
| FF Steer Axle / Inner Bearing Cup & Cone | SET427 | NP026773 / NP899357 | SET603 | NP454773 / NP454357 | 10041905 | HM212011 PS / HM212049 PS |
| FF Steer Axle / Outer Bearing Cup & Cone | SET428 | NP435398 / NP874005 | SET605 | NP454398 / NP454005 | 10041906 | 3720 PS / 3782 PS |
| FL Steer Axle / Inner Bearing Cup & Cone | SET445 | NP039695 / NP294109 | N/A | N/A | 10041925 | 461A PS / 6420 PS |
| FL Steer Axle / Outer Bearing Cup & Cone | SET446 | NP107091 / NP183330 | N/A | N/A | 10041926 | 555S PS / 552A PS |
| R Drive Axle / Inner Bearing Cup & Cone | SET429 | NP363298 / NP034946 | SET600 | NP454298 / NP454946 | 10041915 | 592A PS / 594A PS |
| R Drive Axle / Outer Bearing Cup & Cone | SET430 | NP053874 / NP840302 | SET601 | NP454874 / NP454302 | 10041916 | 572 PS / 580 PS |
| TN Trailer Axle / Inner Bearing Cup & Cone | SET431 | NP503727 / NP965350 | SET602 | NP454727 / NP454350 | 10041935 | HM218210 PS / HM218248 PS |
| TN Trailer Axle / Outer Bearing Cup & Cone | SET427 | NP026773 / NP899357 | SET603 | NP454773 / NP454357 | 10041905 | HM212011 PS / HM212049 PS |
| TP Trailer Axle / Inner & Outer Bearing Cup & Cone | SET432 | NP593561 / NP174964 | SET604 | NP454561 / NP454964 | 10041945 | HM518410 PS / HM518445 PS |

**⚠WARNING**
***Failure to observe the following warnings could create a risk of death or serious injury.***

Never spin a bearing with compressed air. The components may be forcefully expelled.

Proper maintenance and handling practices are critical. Always follow installation instructions and maintain proper lubrication.

A bearing/component should not be put into service if its shelf life has been exceeded.

**CAUTION**
***Failure to follow these cautions may result in property damage***

Use of improper bearing fits may cause damage to equipment.

Do not use damaged bearings.

*TechTips is not intended to substitute for the specific recommendations of your equipment suppliers.*

*Every reasonable effort has been made to ensure the accuracy of the information contained in this writing, but no liability is accepted for errors, omissions or for any other reason.*

TIMKEN

The Timken team applies their know-how to improve the reliability and performance of machinery in diverse markets worldwide. The company designs, makes and markets bearings, gear drives, automated lubrication systems, belts, brakes, clutches, chain, couplings, linear motion products and related power transmission rebuild and repair services.

Stronger. By Design.

**www.timken.com/aftermarket**

05-24 Order No. 11449 | Timken® is a registered trademark of The Timken Company. | © 2024 The Timken Company | Printed in U.S.A.