TIMKEN

# TIMKEN® COMMERCIAL VEHICLE HUB ASSEMBLIES

ENGINEERED TO ENHANCE COMMERCIAL VEHICLE PERFORMANCE, SAFETY AND UPTIME

TIMKEN PREMIUM BEARINGS INSIDE

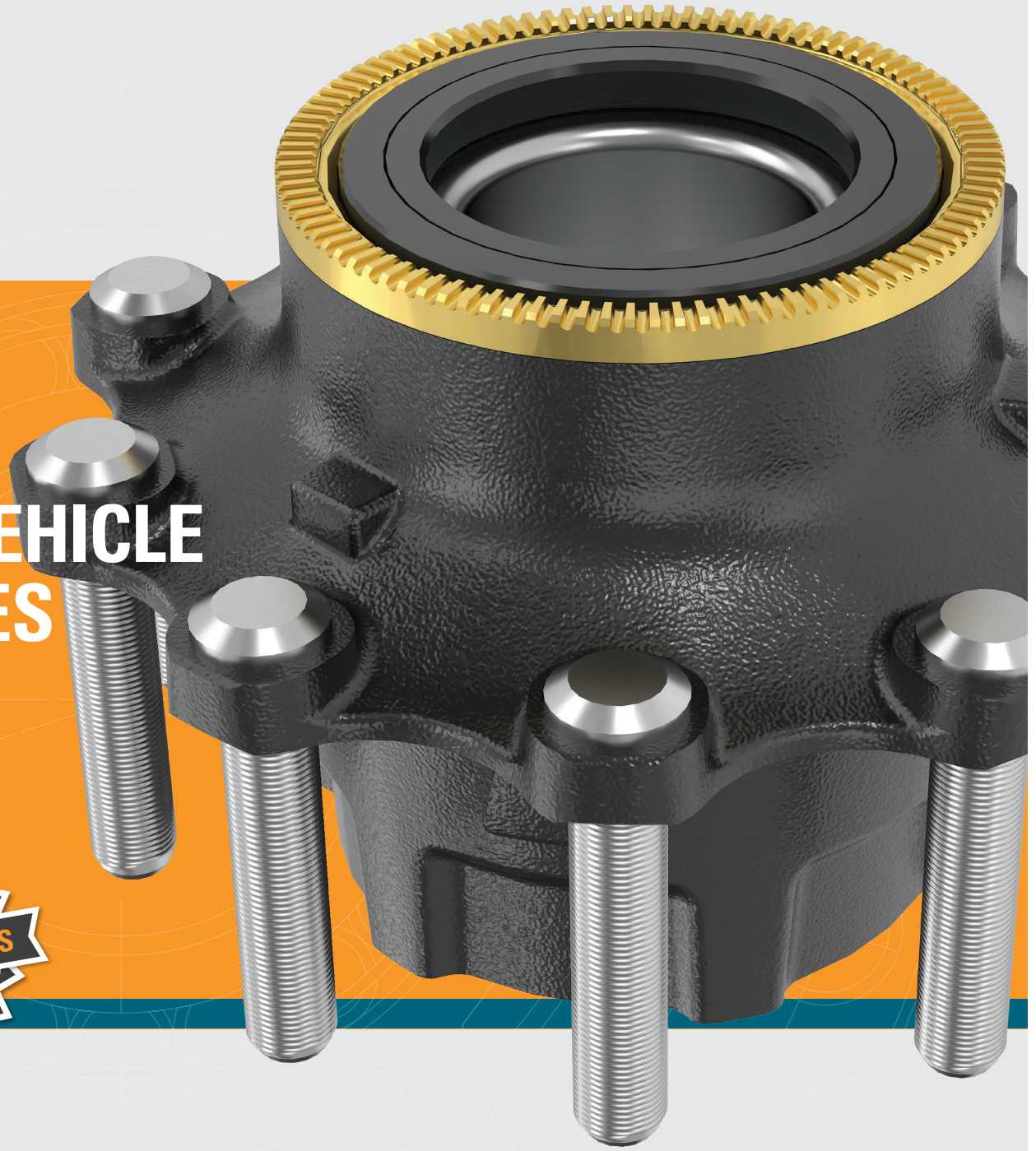

# THE TIMKEN DIFFERENCE – PREMIUM TIMKEN® TAPERED ROLLER BEARINGS

The difference between our hubs and others is what's inside – premium Timken® Tapered Roller Bearings with Set-Right® tolerances. Engineered for exceptional performance – even in severe-duty applications – **our tapered roller bearings outperform other bearings by a 2:1 margin***.

*Information derived from Bearing Fatigue Life Test Machines. Testing methods accepted by original equipment manufacturers. Data represents the median test life.

**PERFORMANCE COMPARISON* 580/572 (SET 401)**

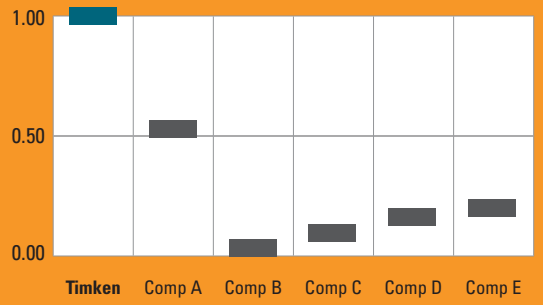


- **A** PREMIUM TIMKEN® TAPERED ROLLER BEARINGS WITH SET-RIGHT® TOLERANCES
- **B** PREMIUM SEAL
- **C** PRECISION SPACER
- **D** IRON HUB FOR DURABILITY AND ENDURANCE
- **E** LONG STUDS

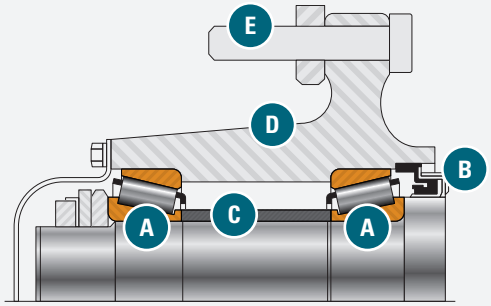


## PRE-ADJUSTED HUB ASSEMBLIES

- Pre-assembled and pre-adjusted for optimal bearing setting
- Easily replace entire assembly
- Reduces the risk of reusing worn parts
- Improves equipment performance
- Reduces downtime and maintenance costs
- Can use your preferred axle lock nut
- Interchangeable with competitor parts
- For commercial vehicle wheel end positions: steer, drive and trailer

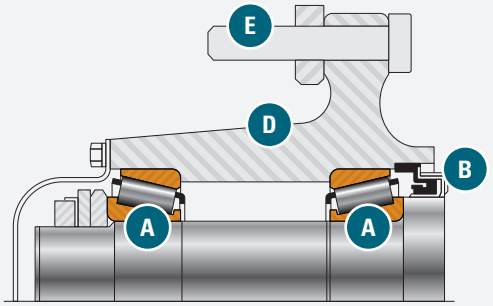


## MANUALLY ADJUSTED HUB ASSEMBLIES

- Easily replace entire assembly
- Reduces the risk of reusing worn parts
- Improves equipment performance
- Reduces downtime and maintenance costs
- Can use your preferred axle lock nut
- Interchangeable with competitor parts
- For commercial vehicle wheel end positions: steer, drive and trailer

# COMMERCIAL VEHICLE HUB ASSEMBLIES: INTERCHANGE

| Timken* | Description | Stud Length | Conmet | | Webb | SKF |
|---|---|---|---|---|---|---|
| Iron | | | Iron | Aluminum | Iron | Iron |
| RD1HUBPA | Drive Pre-Adjusted Hub Loaded | Short Stud | 10082218 | 10082216 | 26432-5T-2200P | |
| | | Long Stud | 10082219 | 10082217 | 26431-3T | |
| FF1HUBPA | Front FF1 (5.06") Pre-Adjusted Hub Loaded | Short Stud | 10082210 | 10082206 | 25062-3T-2200P | |
| | | Long Stud | 10082211 | 10082207 | 25062-3T-2300P | |
| | | Short Stud | | 10082208 | 25061-OT | |
| | | Long Stud | | 10082209 | | |
| FF2HUBPA | Front FF2 (5.44") Pre-Adjusted Hub Loaded | Short Stud | 10082204 | 10082200 | 25202-1T-2300P | |
| | | Long Stud | 10082205 | 10082201 | 25202-3T-2300P | |
| | | Short Stud | | 10082202 | 25202-3T-2200P | |
| | | Long Stud | | 10082203 | | |
| FL1HUBPA | Front FL1 Pre-Adjusted Hub Loaded 5.30" Wheel Inset | Short Stud | 10082214 | 10082212 | 25302-7T-2300P | |
| | | Long Stud | 10082215 | 10082213 | | |
| TN1HUBPA | Trailer TN Pre- Adjusted Hub Loaded | Short Stud | 10082226 | 10082224 | 21032-3T-2200P | |
| | | Long Stud | 10082227 | 10082225 | 21032-5T-2200P | |
| | | Short Stud | 10086804 | 10086810 | | |
| | | Long Stud | 10086805 | 10086811 | | |
| TN1HUB | Trailer TN Manual Adjusted Hub Includes Cups/Races only | Short Stud | 10082251 | 10082249 | 20231-3T | TNHUB1 |
| | | Long Stud | 10082252 | 10082250 | 20231-5T | |
| TP1HUBPA | Trailer TP Pre-Adjusted Hub Loaded | Short Stud | 10082230 | 10082228 | 23032-3T-2200P | |
| | | Long Stud | 10082231 | 10082229 | 23032-5T-2200P | |
| | | Short Stud | 10086807 | 10086813 | | |
| | | Long Stud | 10086808 | 10086814 | | |
| TP1HUB | Trailer TP Manual Adjusted Hub Includes Cups/Races only | Short Stud | 10082255 | 10082253 | 23431-3T | TPHUB1 |
| | | Long Stud | 10082256 | 10082254 | 23431-5T | |

*Timken hubs have long studs

Interchange information shown above is based on information available at the time of publication, portions of which were obtained from unconfirmed sources. Therefore, accuracy of interchangeability information cannot be assured.

# FF1 STEER HUB: FEATURES

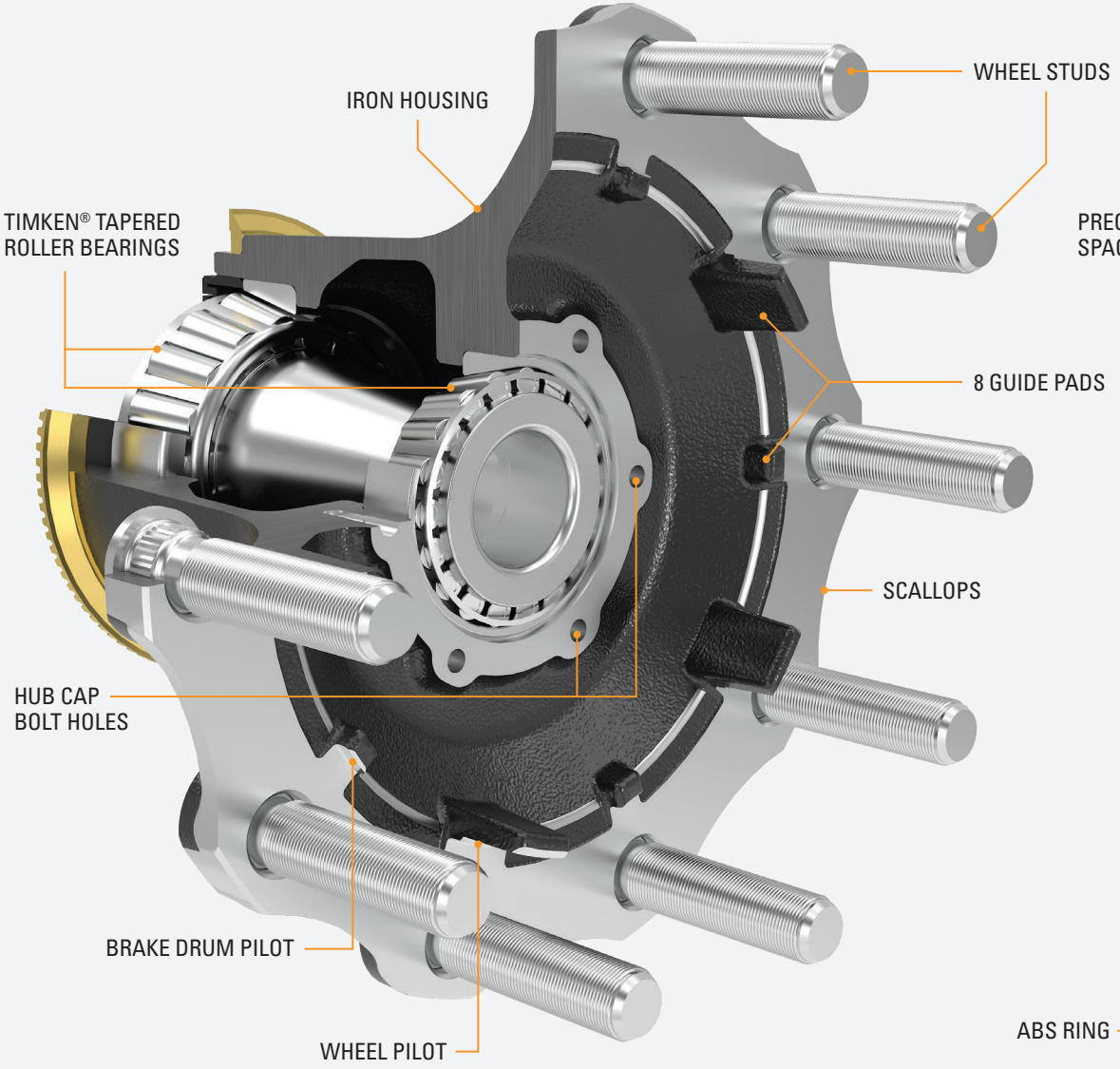


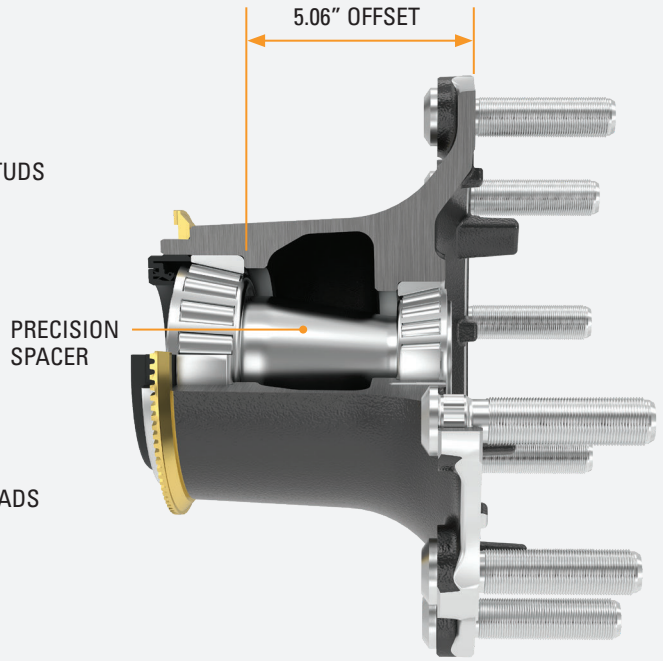


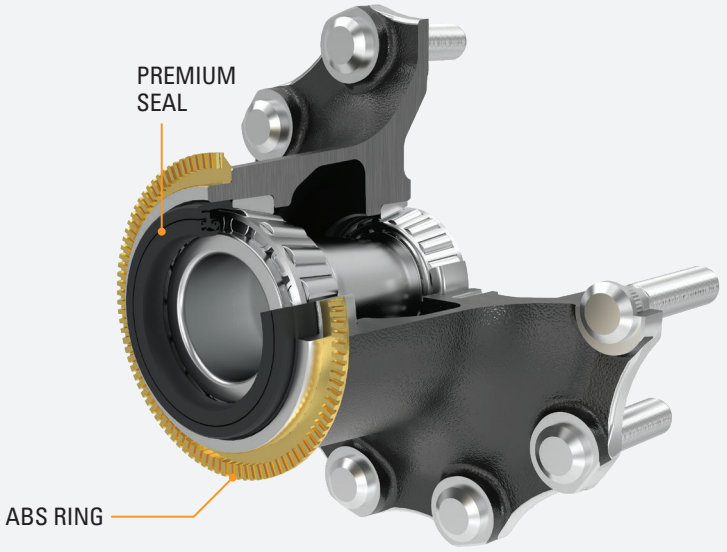

# FF1 STEER HUB: SPECIFICATIONS

| | FF1HUBPA - Pre-Adjusted | FF1HUBA - Manual Adjusted | FF1HUB - Cups Only |
|---|---|---|---|
| MATERIAL | IRON | IRON | IRON |
| AXLE POSITION | STEER | STEER | STEER |
| AXLE | FF1 - STEER 5.06" Offset | FF1 - STEER 5.06" Offset | FF1 - STEER 5.06" Offset |
| ASSEMBLY TYPE | PRESET | MANUAL | HUB |
| BEARING SET (INBOARD) | SET427 | SET427 | NP026773 |
| BEARING SET (OUTBOARD) | SET428 | SET428 | NP435398 |
| COMPATIBLE BRAKE TYPE | DRUM | DRUM | DRUM |
| WHEEL MOUNTING SYSTEM | 10 Stud x 11.25" Bolt Circle Dia. | 10 Stud x 11.25" Bolt Circle Dia. | 10 Stud x 11.25" Bolt Circle Dia. |
| WHEEL STUD SIZE (MM) | M22 X 1.5 | M22 X 1.5 | M22 X 1.5 |
| WHEEL STUD STANDOUT (IN.) | 3.19 | 3.19 | 3.19 |
| WHEEL PILOT DIAMETER (IN) | 8.65 | 8.65 | 8.65 |
| BRAKE DRUM PILOT DIAMETER (IN) | 8.78 | 8.78 | 8.78 |
| HUB CAP BOLT PATTERN | (6 X 4.5" BC ) 5/16-18 UNC | (6 X 4.5" BC ) 5/16-18 UNC | (6 X 4.5" BC ) 5/16-18 UNC |
| WEIGHT (LBS.) | 55 | 50 | 45 |
| HUB REBUILD KIT | FFTC1 | SET413/SET406 | SET413/SET406 |
| SPACER | 103592TKR | N/A | N/A |
| SEAL PART NUMBER | 10P35000 | 10P35000 | 10P35000 |

# FF2 STEER HUB: FEATURES

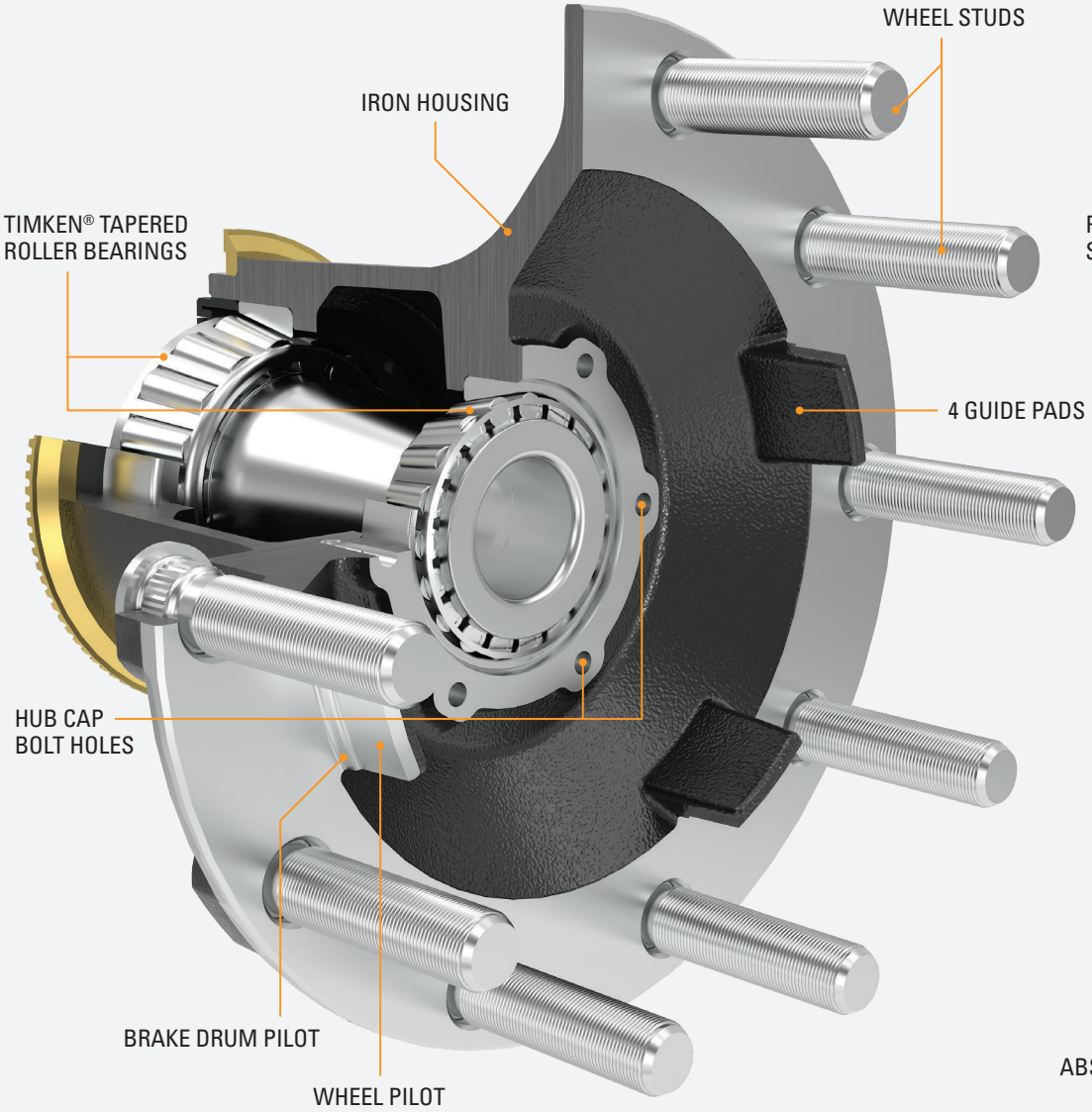


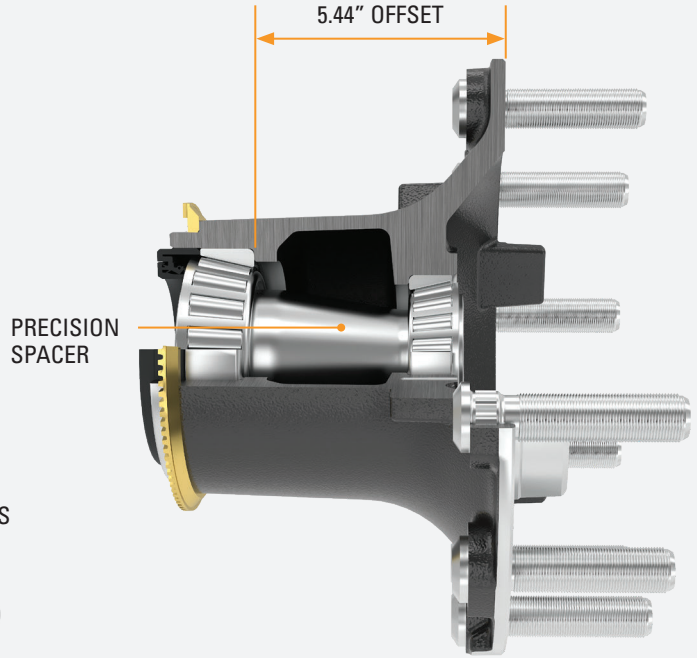


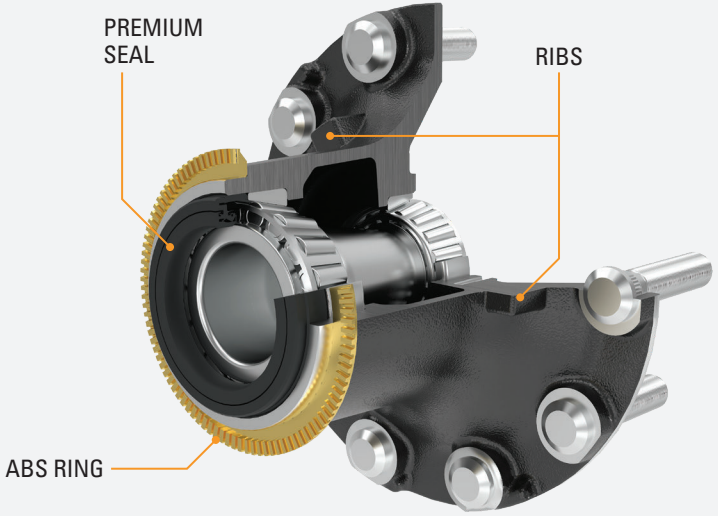

# FF2 STEER HUB: SPECIFICATIONS

| | FF2HUBPA - Pre-Adjusted | FF2HUBA - Manual Adjusted | FF2HUB - Cups Only |
|---|---|---|---|
| MATERIAL | IRON | IRON | IRON |
| AXLE POSITION | STEER | STEER | STEER |
| AXLE | FF2 - STEER 5.44" Offset | FF2 - STEER 5.44" Offset | FF2 - STEER 5.44" Offset |
| ASSEMBLY TYPE | PRESET | MANUAL | HUB |
| BEARING SET (INBOARD) | SET427 | SET427 | NP026773 |
| BEARING SET (OUTBOARD) | SET428 | SET428 | NP435398 |
| COMPATIBLE BRAKE TYPE | DRUM | DRUM | DRUM |
| WHEEL MOUNTING SYSTEM | 10 Stud x 11.25" Bolt Circle Dia. | 10 Stud x 11.25" Bolt Circle Dia. | 10 Stud x 11.25" Bolt Circle Dia. |
| WHEEL STUD SIZE (MM) | M22 X 1.5 | M22 X 1.5 | M22 X 1.5 |
| WHEEL STUD STANDOUT (IN.) | 3.19 | 3.19 | 3.19 |
| WHEEL PILOT DIAMETER (IN) | 8.65 | 8.65 | 8.65 |
| BRAKE DRUM PILOT DIAMETER (IN) | 8.78 | 8.78 | 8.78 |
| HUB CAP BOLT PATTERN | (6 X 4.5" BC ) 5/16-18 UNC | (6 X 4.5" BC ) 5/16-18 UNC | (6 X 4.5" BC ) 5/16-18 UNC |
| WEIGHT (LBS.) | 54 | 49 | 44 |
| HUB REBUILD KIT | FFTC1 | SET413/SET406 | SET413/SET406 |
| SPACER | 103592TKR | N/A | N/A |
| SEAL PART NUMBER | 10P35000 | 10P35000 | 10P35000 |

# FL STEER HUB: FEATURES

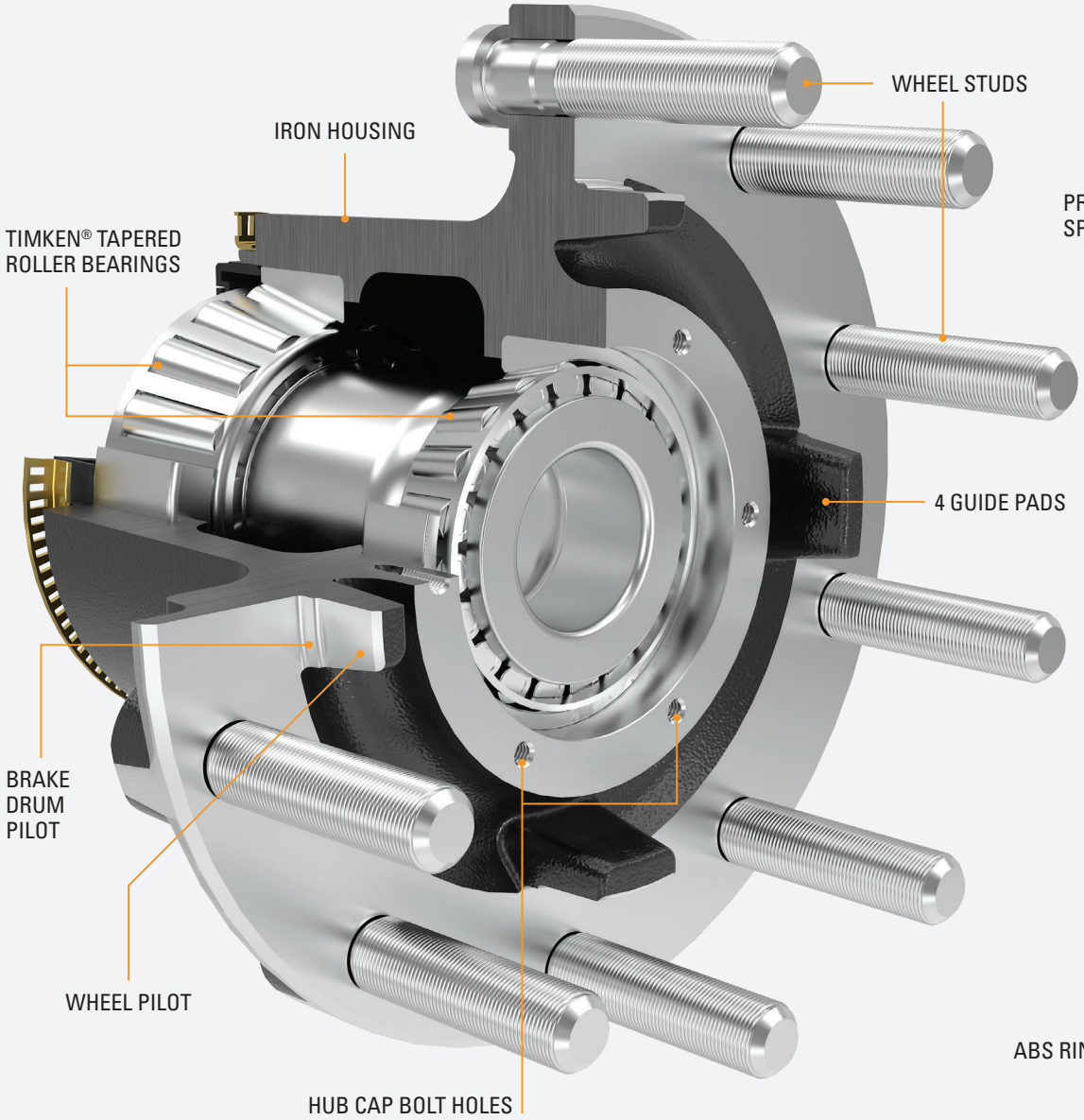


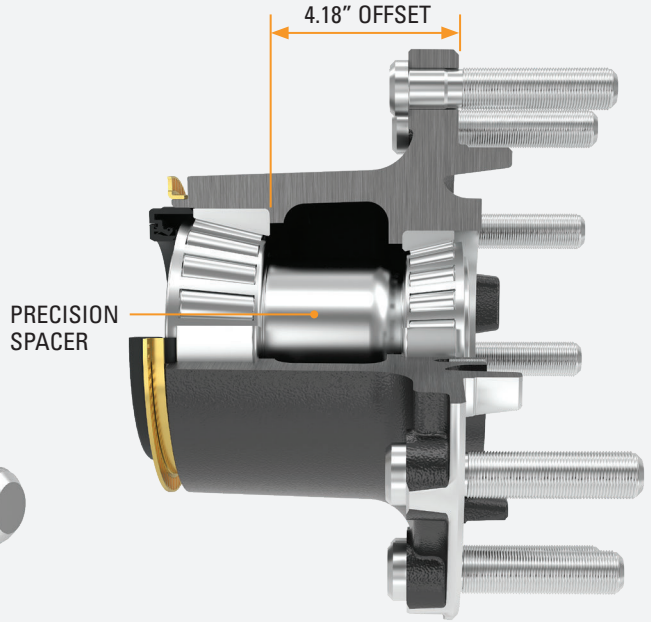


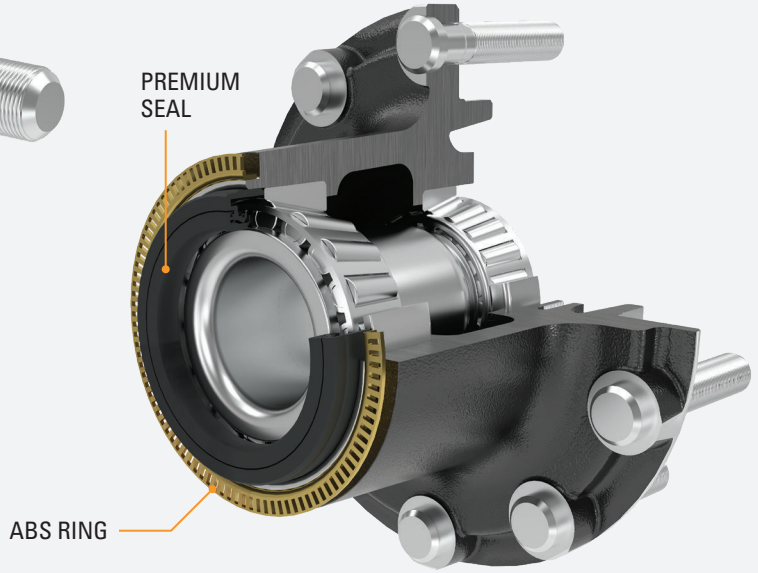

# FL STEER HUB: SPECIFICATIONS

| | FL1HUBPA - Pre-Adjusted | FL1HUBA - Manual Adjusted | FL1HUB - Cups Only |
|---|---|---|---|
| MATERIAL | IRON | IRON | IRON |
| AXLE POSITION | STEER | STEER | STEER |
| AXLE | FL- STEER 4.18" Offset | FL- STEER 4.18" Offset | FL- STEER 4.18" Offset |
| ASSEMBLY TYPE | PRESET | MANUAL | HUB |
| BEARING SET (INBOARD) | SET445 | SET445 | NP039695 |
| BEARING SET (OUTBOARD) | SET446 | SET446 | NP183330 |
| COMPATIBLE BRAKE TYPE | DRUM | DRUM | DRUM |
| WHEEL MOUNTING SYSTEM | 10 Stud x 11.25" Bolt Circle Dia. | 10 Stud x 11.25" Bolt Circle Dia. | 10 Stud x 11.25" Bolt Circle Dia. |
| WHEEL STUD SIZE (MM) | M22 X 1.5 | M22 X 1.5 | M22 X 1.5 |
| WHEEL STUD STANDOUT (IN.) | 3.03 | 3.03 | 3.03 |
| WHEEL PILOT DIAMETER (IN) | 8.65 | 8.65 | 8.65 |
| BRAKE DRUM PILOT DIAMETER (IN) | 8.78 | 8.78 | 8.78 |
| HUB CAP BOLT PATTERN | (6 X 5.5" BC ) 5/16-18 UNC | (6 X 5.5" BC ) 5/16-18 UNC | (6 X 5.5" BC ) 5/16-18 UNC |
| WEIGHT (LBS.) | 81 | 71 | 62 |
| HUB REBUILD KIT | FLTC1 | SET423/SET424 | SET423/SET424 |
| SPACER | 103807TKR | N/A | N/A |
| SEAL PART NUMBER | 10P43750 | 10P43750 | 10P43750 |

# R DRIVE HUB: FEATURES

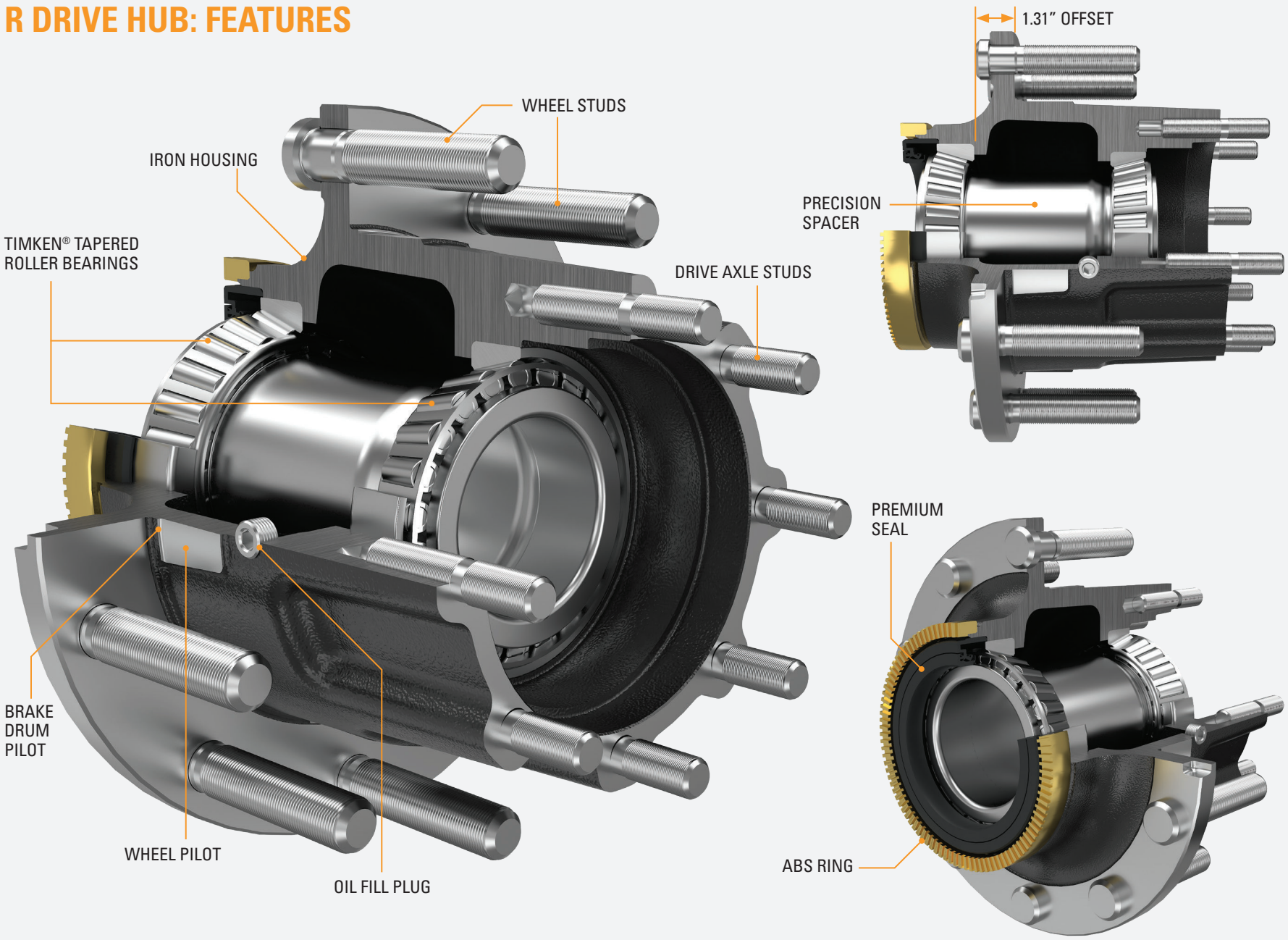

# R DRIVE HUB: SPECIFICATIONS

| | RD1HUBPA - Pre-Adjusted | RD1HUBA - Manual Adjusted | RD1HUB - Cups Only |
|---|---|---|---|
| MATERIAL | IRON | IRON | IRON |
| AXLE POSITION | DRIVE | DRIVE | DRIVE |
| AXLE | RD - Drive 1.31" Offset | RD - Drive 1.31" Offset | RD - Drive 1.31" Offset |
| ASSEMBLY TYPE | PRESET | MANUAL | HUB |
| BEARING SET (INBOARD) | SET429 | SET429 | NP363298 |
| BEARING SET (OUTBOARD) | SET430 | SET430 | NP053874 |
| COMPATIBLE BRAKE TYPE | DRUM | DRUM | DRUM |
| WHEEL MOUNTING SYSTEM | 10 Stud x 11.25" Bolt Circle Dia. | 10 Stud x 11.25" Bolt Circle Dia. | 10 Stud x 11.25" Bolt Circle Dia. |
| WHEEL STUD SIZE (MM) | M22 X 1.5 | M22 X 1.5 | M22 X 1.5 |
| WHEEL STUD STANDOUT (IN.) | 4.06 | 4.06 | 4.06 |
| WHEEL PILOT DIAMETER (IN) | 8.65 | 8.65 | 8.65 |
| BRAKE DRUM PILOT DIAMETER (IN) | 8.78 | 8.78 | 8.78 |
| DRIVE AXLE STUD | (8 X 7.00 BC ) 5/8-18 UNF STUDS | (8 X 7.00 BC ) 5/8-18 UNF STUDS | (8 X 7.00 BC ) 5/8-18 UNF STUDS |
| WEIGHT (LBS.) | 80 | 68 | 57 |
| HUB REBUILD KIT | RDTC1 | SET403/SET401 | SET403/SET401 |
| SPACER | 103593TKR | N/A | N/A |
| SEAL PART NUMBER | 11P47670 | 11P47670 | 11P47670 |

# N (TAPERED SPINDLE) TRAILER HUB: FEATURES

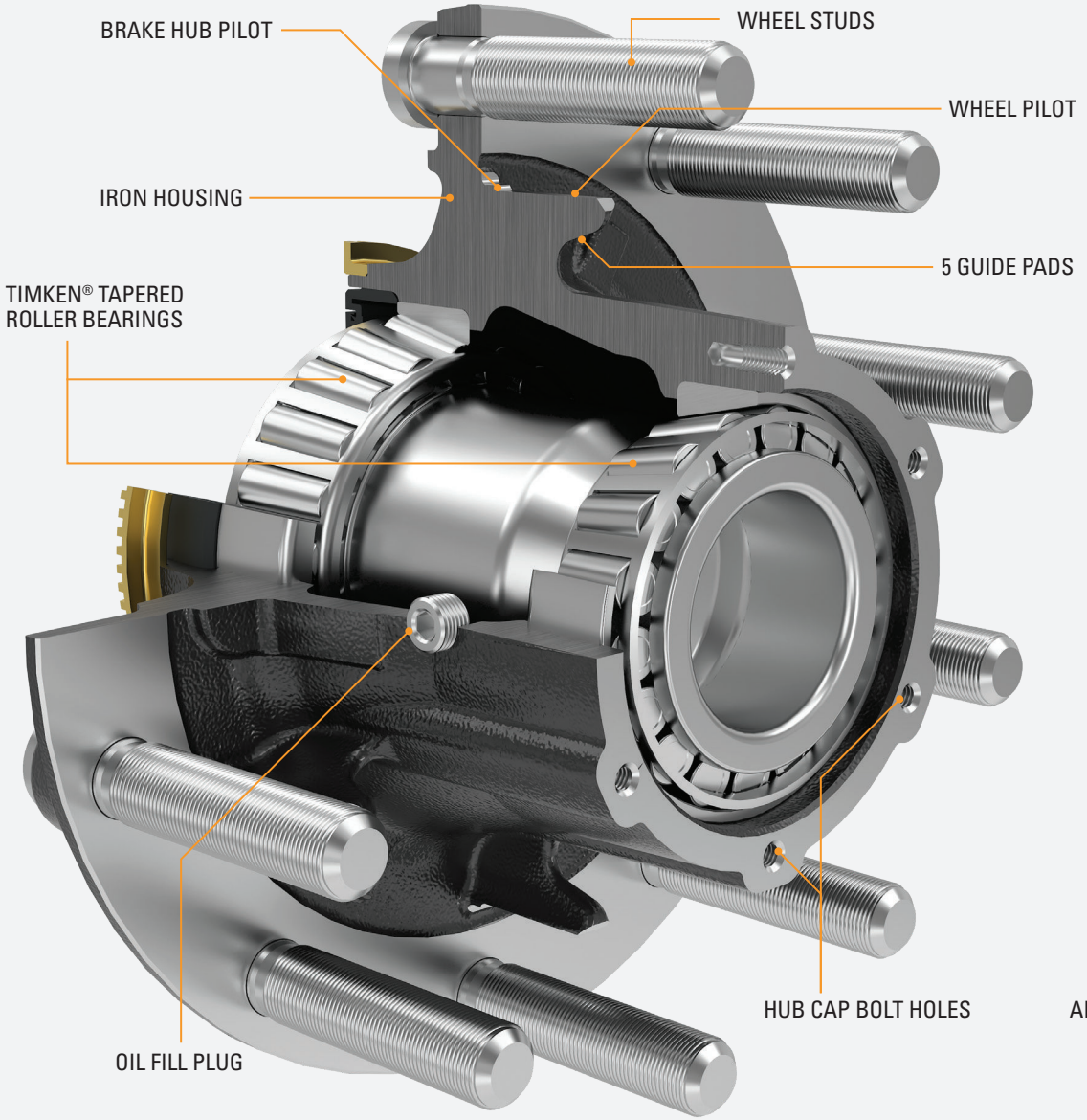


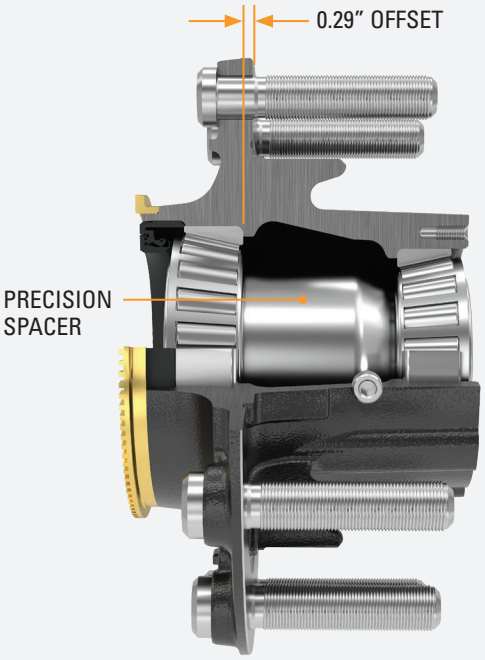


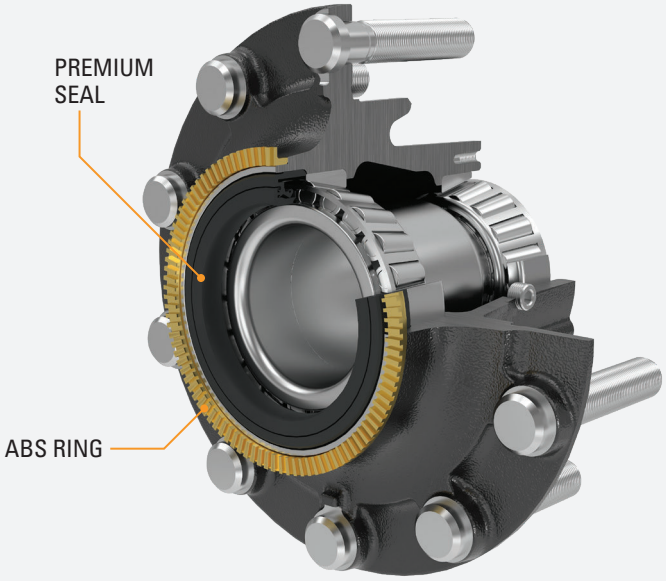

# N (TAPERED SPINDLE) TRAILER HUB: SPECIFICATIONS

| | TN1HUBPA - Pre-Adjusted | TN1HUBA - Manual Adjusted | TN1HUB - Cups Only |
|---|---|---|---|
| MATERIAL | IRON | IRON | IRON |
| AXLE POSITION | TRAILER | TRAILER | TRAILER |
| AXLE | TN - Trailer 0.29" Offset | TN - Trailer 0.29" Offset | TN - Trailer 0.29" Offset |
| ASSEMBLY TYPE | PRESET | MANUAL | HUB |
| BEARING SET (INBOARD) | SET431 | SET431 | NP503727 |
| BEARING SET (OUTBOARD) | SET427 | SET427 | NP026773 |
| COMPATIBLE BRAKE TYPE | DRUM | DRUM | DRUM |
| WHEEL MOUNTING SYSTEM | 10 Stud x 11.25" Bolt Circle Dia. | 10 Stud x 11.25" Bolt Circle Dia. | 10 Stud x 11.25" Bolt Circle Dia. |
| WHEEL STUD SIZE (MM) | M22 X 1.5 | M22 X 1.5 | M22 X 1.5 |
| WHEEL STUD STANDOUT (IN.) | 4.16 | 4.16 | 4.16 |
| WHEEL PILOT DIAMETER (IN) | 8.65 | 8.65 | 8.65 |
| BRAKE DRUM PILOT DIAMETER (IN) | 8.78 | 8.78 | 8.78 |
| HUB CAP BOLT PATTERN | (6 x 5.500 BC ) 5/16-18 UNC | (6 x 5.500 BC ) 5/16-18 UNC | (6 x 5.500 BC ) 5/16-18 UNC |
| WEIGHT (LBS.) | 51 | 49 | 47 |
| HUB REBUILD KIT | TNTC1 | SET414/SET413 | SET414/SET413 |
| SPACER | 104144TKR | N/A | N/A |
| SEAL PART NUMBER | 12P46250 | 12P46250 | 12P46250 |

# P (PARALLEL SPINDLE) TRAILER HUB: FEATURES

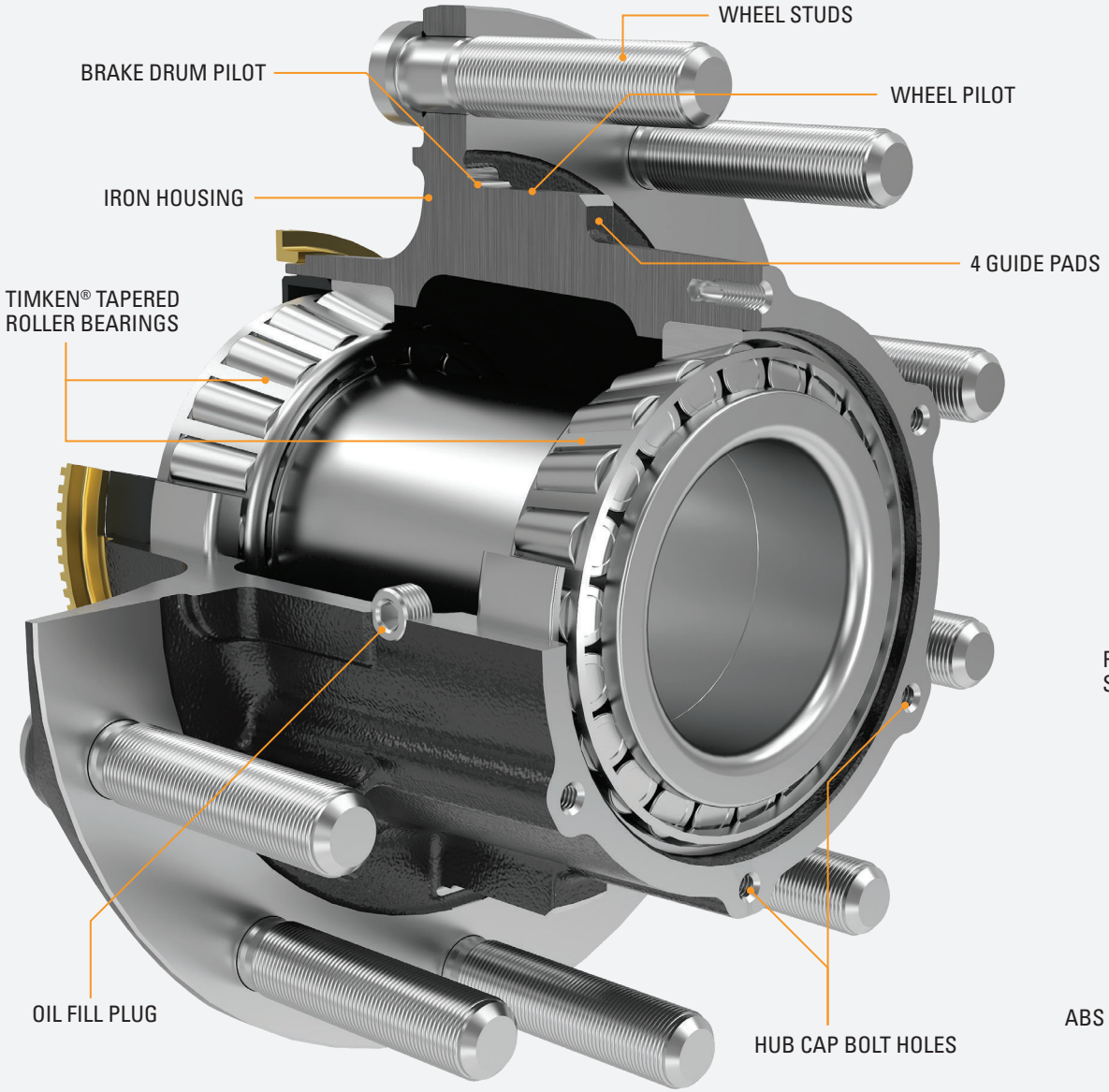


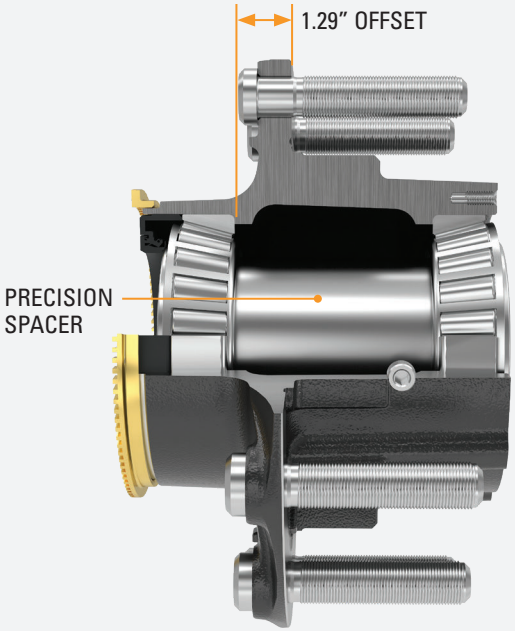


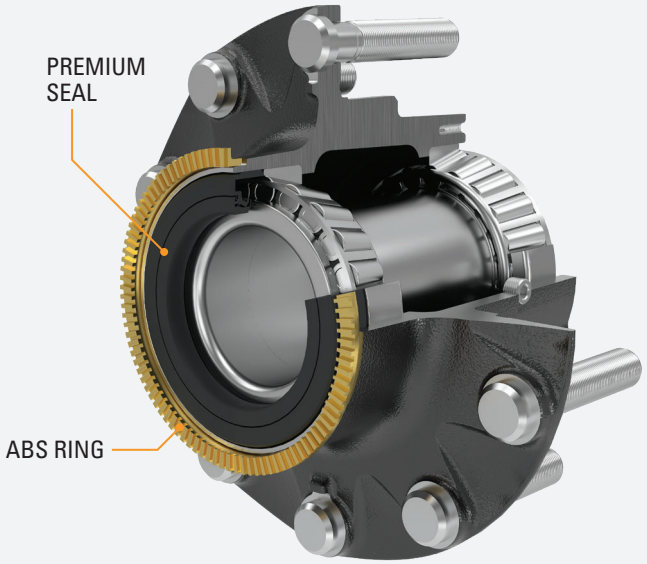

# P (PARALLEL SPINDLE) TRAILER HUB: SPECIFICATIONS

| | TP1HUBPA - Pre-Adjusted | TP1HUBA - Manual Adjusted | TP1HUB - Cups Only |
|---|---|---|---|
| MATERIAL | IRON | IRON | IRON |
| AXLE POSITION | TRAILER | TRAILER | TRAILER |
| AXLE | TP - Trailer 1.29" Offset | TP - Trailer 1.29" Offset | TP - Trailer 1.29" Offset |
| ASSEMBLY TYPE | PRESET | MANUAL | HUB |
| BEARING SET (INBOARD) | SET432 | SET432 | NP593561 |
| BEARING SET (OUTBOARD) | SET432 | SET432 | NP593561 |
| COMPATIBLE BRAKE TYPE | DRUM | DRUM | DRUM |
| WHEEL MOUNTING SYSTEM | 10 Stud x 11.25" Bolt Circle Dia. | 10 Stud x 11.25" Bolt Circle Dia. | 10 Stud x 11.25" Bolt Circle Dia. |
| WHEEL STUD SIZE (MM) | M22 X 1.5 | M22 X 1.6 | M22 X 1.7 |
| WHEEL STUD STANDOUT (IN.) | 4.16 | 4.16 | 4.16 |
| WHEEL PILOT DIAMETER (IN) | 8.65 | 8.65 | 8.65 |
| BRAKE DRUM PILOT DIAMETER (IN) | 8.78 | 8.78 | 8.78 |
| HUB CAP BOLT PATTERN | (6 x 6.750 BC ) 5/16-18 UNC | (6 x 6.750 BC ) 5/16-18 UNC | (6 x 6.750 BC ) 5/16-18 UNC |
| WEIGHT (LBS.) | 56 | 54 | 45 |
| HUB REBUILD KIT | TPTC1 | SET415 | SET415 |
| SPACER | 104412TKR | N/A | N/A |
| SEAL PART NUMBER | 12P42500 | 12P42500 | 12P42500 |

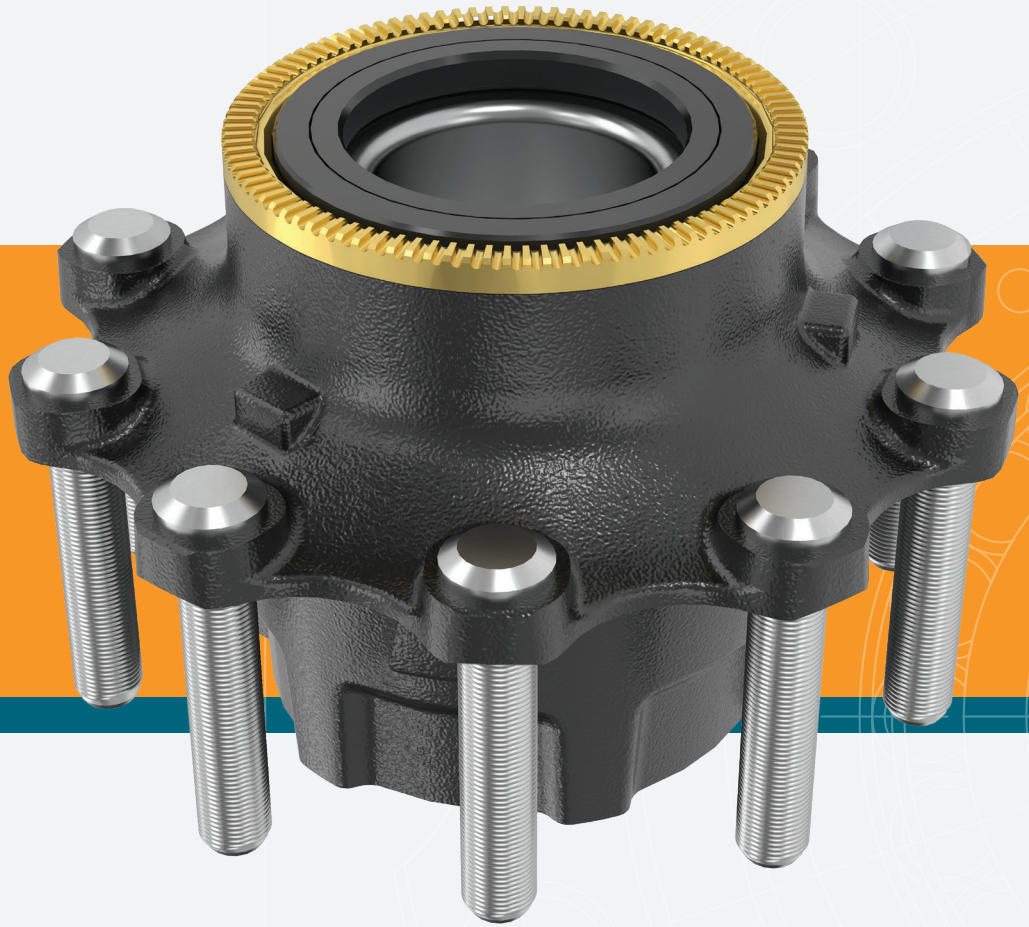

Visit our Commercial Vehicle Hub Assembly page with Interchange look up.

View our Commercial Vehicle Hub Assembly videos on YouTube.

# TIMKEN

The Timken team applies their know-how to improve the reliability and performance of machinery in diverse markets worldwide. The company designs, makes and markets bearings, gear drives, automated lubrication systems, belts, brakes, clutches, chain, couplings, linear motion products and related industrial motion rebuild and repair services.

**Stronger. By Design.**

**www.timken.com/aftermarket**

08-25 Order No. 11812 | Timken® is a registered trademark of The Timken Company. | © 2025 The Timken Company | Printed in U.S.A.
Other registered and unregistered trademarks are the property of their respective owners.