TIMKEN



# TIMKEN® ADAPT™ BEARING INSTALLATION GUIDE

**⚠WARNING:** ***Failure to observe the following warnings could lead to a risk of death or serious bodily harm.***

This bearing features a separable inner and outer ring. Care must be taken when handling or installing a fully assembled bearing to prevent the inner ring and roller-retainer assembly from accidentally sliding out of the assembly. When using this bearing to replace a unitized bearing in a roll end position, ensure that the shaft end plate design retains the bearing and housing assembly on the shaft during installation.

Proper maintenance and handling practices are critical.
Always follow installation instructions and maintain proper lubrication.

Never spin a bearing with compressed air. The roller set may be forcefully expelled.

*This manual is not intended to substitute for the specific recommendations of your equipment supplier. Every reasonable effort has been made to ensure the accuracy of the information contained in this writing, but no liability is accepted for errors, omissions or for any other reason.*

## TABLE OF CONTENTS


The ADAPT™ Bearing Design 4

Storing and Unpacking ADAPT Bearings 6

Preparing for Installation 6

Tools Required 6

Roll and Housing Preparation 6

Assembly Notes 8

Installation: End of Roll Position 8

Short Roll Sections Combined to Form Support Roll 10

Installation: Center of Roll Position 11

ADAPT Bearing Parts List 14

Bearing Tolerances and Radial Internal Clearances 14

Recommended End Plate Dimensions 15

Suggested Fitting Practice 15

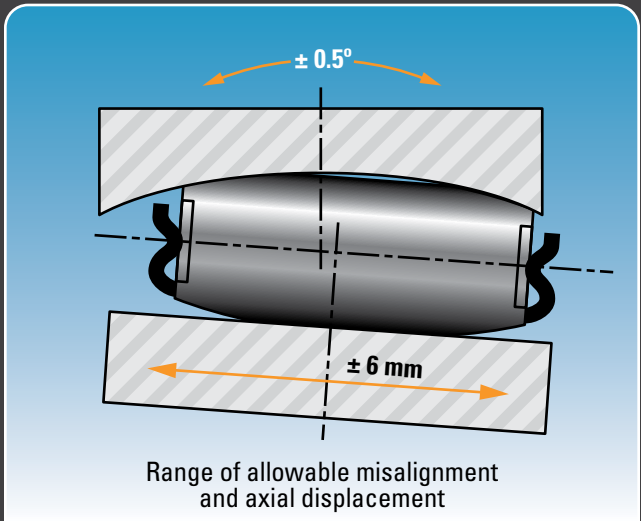


Range of allowable misalignment and axial displacement

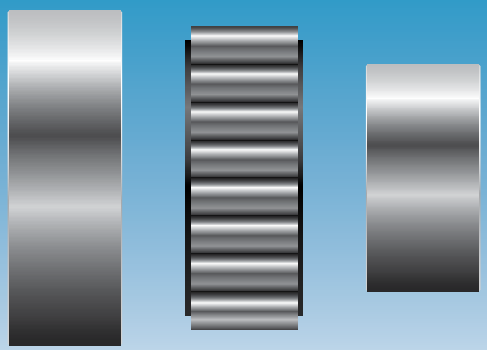


Separable components

## THE ADAPT™ BEARING DESIGN

The Timken® ADAPT™ bearing fully lives up to its name. It simultaneously adapts to changes in load, alignment and axial movement of the caster roll. Operating internal clearance remains constant, regardless of axial float or misalignment. In addition, the axial float capability is not reduced by roll misalignment, and vice versa.

The unique design incorporates the key features of both the spherical roller bearing (SRB) and cylindrical roller bearing (CRB) designs. The inner ring is cylindrical, allowing the shaft to move (float) left or right relative to the outer ring. This allows the bearing to adapt to axial thermal growth and roll movement.

The outer ring and full-complement rollers are manufactured with a proprietary profile that provides several benefits. The bearing can tolerate up to 0.5 degree misalignment to compensate for shaft bending. The full-complement rollers self-align with the inner ring regardless of axial displacement and misalignment, with reduced potential for roller skewing.

The bearing design also includes features that speed and simplify installation. The inner ring, outer ring and roller-retainer assembly are separate components, giving you more flexibility during installation and facilitating bearing inspection. The full-complement of rollers is held together as an assembly by a hardened steel retainer, eliminating the problem of loose rollers. Inner rings and outer assemblies (outer ring and full complement rollers) of the same size and internal clearance are interchangeable; the inner rings and outer assemblies are not matched. The roller-retainer assembly and outer ring are matched with the same serial number and must be kept together as a set.

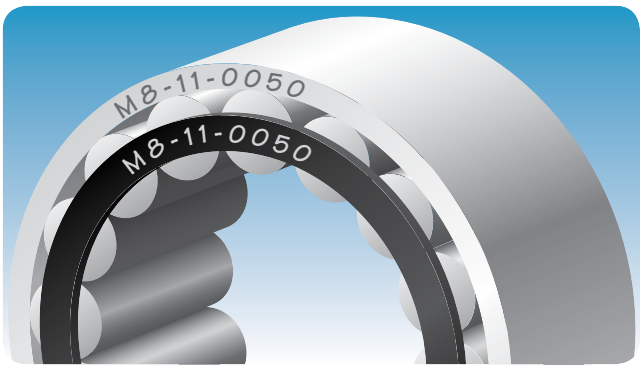


*Matched Roller-Retainer Assembly and Outer Ring Serial Numbers*

When the ADAPT bearing is used in end positions, the shaft end plate must have a diameter that is large enough to retain the bearing and housing assembly. The minimum required end plate diameters are shown in the End Plate Dimensions data table on page 15.




A snap ring version of the ADAPT bearing is also available for use in applications where the end cover does not restrain the roller assembly. The snap ring retains the roller assembly in one direction and when the roller assembly is retained the whole outer assembly is also retained.

## STORING AND UNPACKING ADAPT BEARINGS

Store all Timken bearings in a dry and clean area to minimize the possibility of corrosion, contamination or other damage.

The inner ring and outer ring assembly with rollers are packed separately in a one-high shipping container. Keep the bearings in their shipping container until you are ready to install them.

The bearing components are treated with preservative oil. It is compatible with most commonly used oils and other lubricants, so the bearing does not have to be cleaned or washed before mounting. Leaving the preservative oil in place will protect the bearing from corrosion prior to installation.

If the bearing was removed from its original packaging and not installed immediately, we recommend washing the bearing to remove contaminants before lubricating and installing it.

The roller-retainer assembly is a self-contained unit. The rollers are retained, eliminating the possibility of losing one or more rollers during installation.

Inner rings are interchangeable with outer assemblies [outer ring and roller-retainer set]. Inner rings are not matched to outer assemblies.

## PREPARING FOR INSTALLATION

Before beginning the installation, plan your work. Be certain that you have the correct bearing components. Also determine what tools will be required and have them on hand.

Bearings should be installed in a clean environment, free from dust, debris, moisture and other contaminants. Because of the risk of contamination from dirt, abrasives, etc., that may be present in the maintenance area, keep the outer ring assembly in its protective plastic wrap or cover it with a clean shop rag during the installation process until the bearing is ready to place in the housing.

To ensure safety during installation, while removing or installing bearings, lock or secure the rolls to avoid the risk of them rolling unexpectedly.

## TOOLS REQUIRED

While not required, an induction heater can be very helpful when installing components with a tight fit. The heater can be used to warm the components, creating slight thermal growth that will ease installation.



## ROLL AND HOUSING PREPARATION

After removing the old bearing from the roll, inspect the spacers (sleeves), shaft and the interior of the housing to ensure that there are no sharp edges, burrs, gouges or score marks. Any of these types of damage can make it difficult to install the new bearing, and may shorten its life. Do not install bearings on a damaged or worn shaft or in a damaged or worn housing.

If there are any burrs, nicks, score marks or other raised metal areas, use the appropriate tools to remove the raised metal and create a smooth surface before installing the bearing.

**1.** To provide a good mounting surface for the bearing, wipe the roll end clean of grease and dirt. Then use 180-grit emery cloth to remove small imperfections in the metal, lightly polishing the shaft where the bearing inner ring will be seated, and the interior of the housing where the outer ring will be mounted.

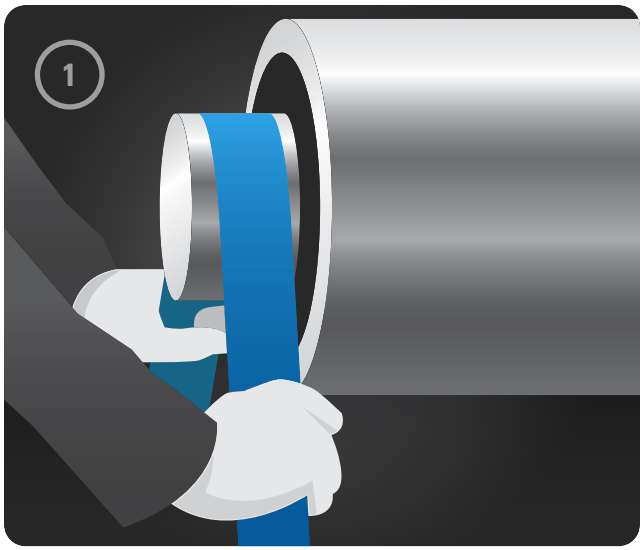


**2.** Clean out any oil holes in the housing.

**3.** Check the diameter of the bearing "seat," the area on the shaft where the bearing inner will be mounted on the shaft. Take measurements in one direction, and then rotate the micrometer 90 degrees to ensure that the shaft end is both symmetrical and the proper size. The correct dimensions are shown in the Suggested Fitting Practice Table on page 15.

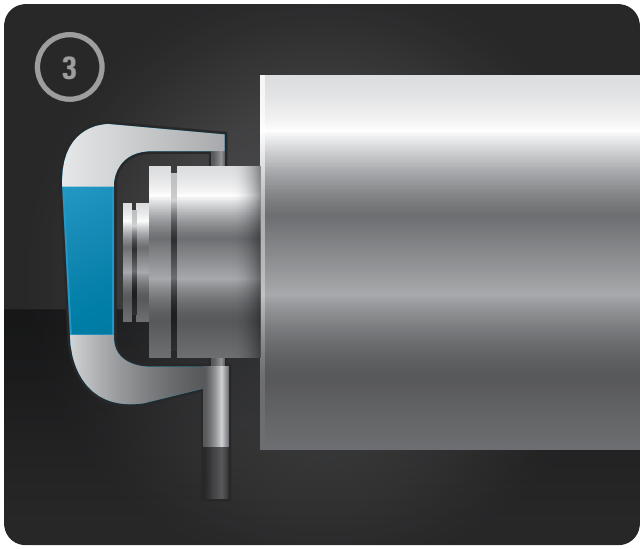


**4.** Measure the inside diameter of the housing. Take measurements in one direction, and then rotate the micrometer 90 degrees to ensure that the housing is both symmetrical and the proper size. The correct dimensions are shown in the Suggested Fitting Practice Table on page 15.




**5.** If the bearings are not going to be installed immediately, protect the mounting surface of the roll with clean plastic sheeting or cloths.

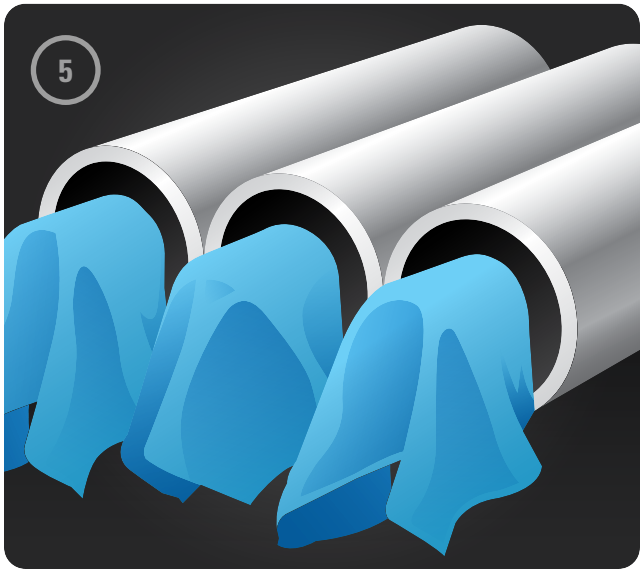


**6.** Just before installing the bearing, wipe clean the shaft where the inner ring will be seated, and wipe clean the housing surface where the outer ring will be mounted.

## ASSEMBLY NOTES

The ADAPT bearing is designed to be used in a float position on a caster roll, and can be mounted at either the roll's center or end support position, depending on the caster and roll configuration.

The ADAPT bearing boundary dimensions conform to standard ISO dimensions, but the internal geometry and separable inner ring concepts are unique. Therefore, each application, including the mounting and installation procedures, should be reviewed prior to installing the ADAPT bearing. Contact your Timken representative for assistance.

The following installation procedures describe the basic process used in typical installations on slab support rolls. You may need to alter or adjust these procedures to address the specific configuration or design of your rolls.

**Note: If metal sealing rings are used in either the end or center position, be careful when removing or installing them to avoid damage to shaft, housing or bearing components.**

There are two styles of an ADAPT bearing, with and without a snap ring on the inner ring. This procedure describes the bearing equipped WITHOUT the snap ring. If you are interested in learning about the snap ring version, contact your Timken representative.

For applications where the shaft end plate does not capture the bearing outer assembly and housing on the roll end, Timken also offers a version of the ADAPT bearing that includes an inner-ring snap ring. The snap ring secures the bearing outer assembly and housing in place, on the roll end, preventing the assembly from accidentally falling from the roll during assembly and handling.

## INSTALLATION: END OF ROLL POSITION

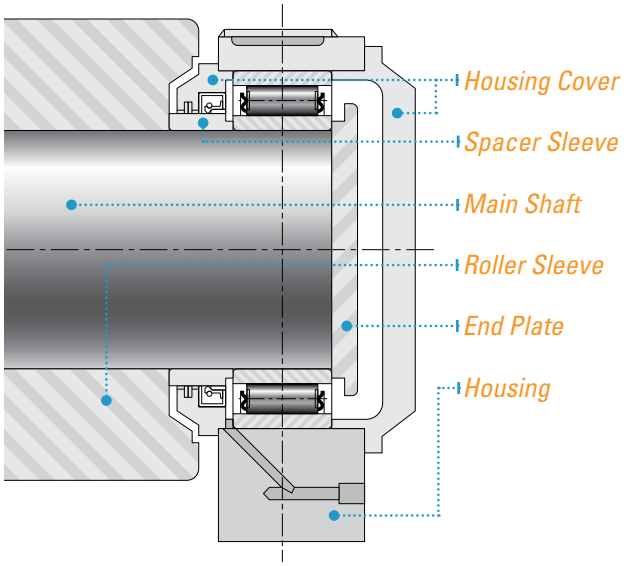


**1.** Check the inboard roll spacers for any damage. Remove any raised metal or other physical damage with the appropriate tools.

**2.** Apply anti-seize lubricant or a thin layer of grease to the end of the roll/shaft where the spacer and bearing inner ring will be located.

**3.** Install the spacer on the end of the roll. For tight fitted spacers use an induction heater to heat the spacer to 100°C [212°F], or use an impact sleeve to press the spacer into position. The spacer must be firmly seated against the roll face or shaft shoulder.

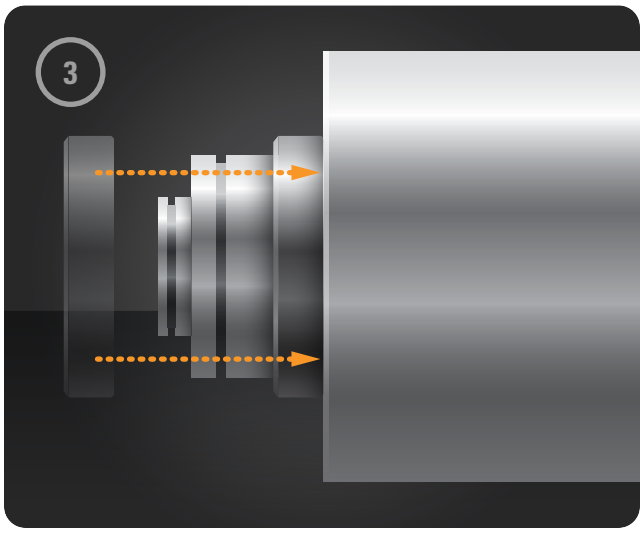

**4.** Install the bearing inner ring on the end of the roll using the same technique and temperature used for the spacer. The inner ring must be firmly seated against the spacer.

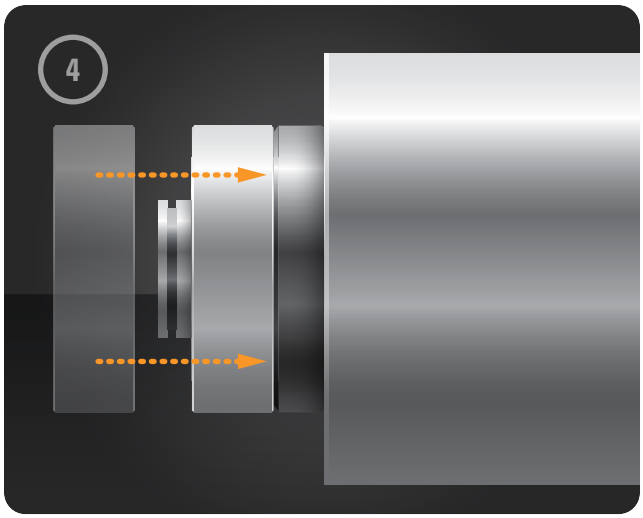


**5.** Apply a thin coat of oil or grease to the inside of the housing to make the outer ring easier to insert.

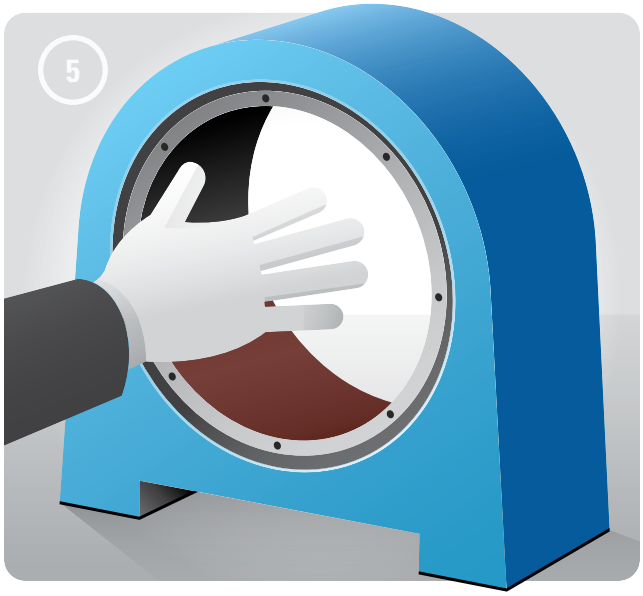


**6.** Remove the roller assembly from the outer ring prior to assembling the outer ring in the housing. The roller-retainer assembly and outer ring are matched and the roller-retainer must be kept together during mounting process. Place the bearing outer ring (without the roller assembly) into the housing and slide it into place. The outer ring is typically a loose fit and easily mounts in the housing. If needed, use a soft-faced mallet to tap the ring into position or an induction heater to warm the housing to 100°C [212°F].

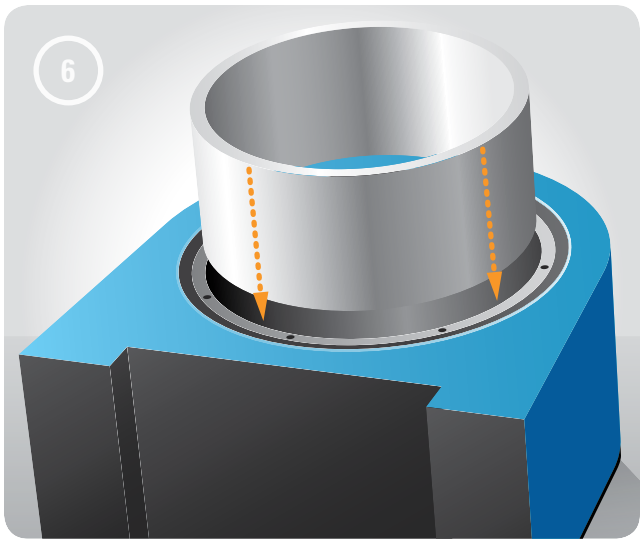


**7.** Use a feeler gauge to ensure that the contact face of the bearing outer ring is in contact with the housing shoulder or inboard cover.

**8.** Insert the matched roller-retainer assembly into the outer ring. Guide the rollers into the outer ring so they do not catch on the outer ring corner.

**Note: Take care when feeding the rollers into the outer ring to avoid scratching the bearing components. Rotate the roller assembly as it is lowered into the outer ring.**

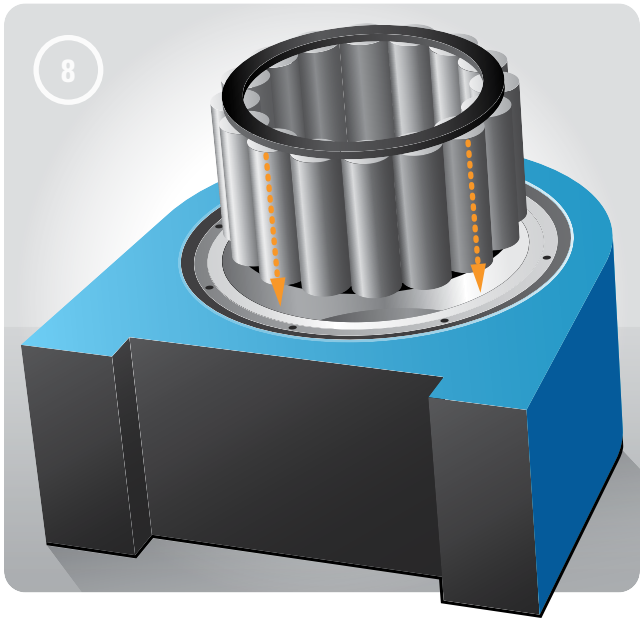

**9.** Lubricate the rollers using the same oil or grease used on your caster. There is no need to remove the anti-rust coating on the bearing. Rotate the roller assembly one revolution to distribute the lubricant. Center the cage and roller assembly in the outer ring.

**Note: At this point, the bearing components are constrained in the housing in only one direction. As you install the housing assembly on the roll end, be careful to avoid having the rollers and inner ring fall out of the front of the housing.**

**10.** Install the housing assembly, including the bearing outer ring and roller assembly, on the bearing inner ring that's already mounted on the roll end. Take care to align the outer assembly with the roll end. Also be careful to avoid damage to the housing seals. Rock the housing back and forth in the direction of rotation as you move it onto the roll end to ease installation and minimize the chance of damage to the rollers or inner ring.

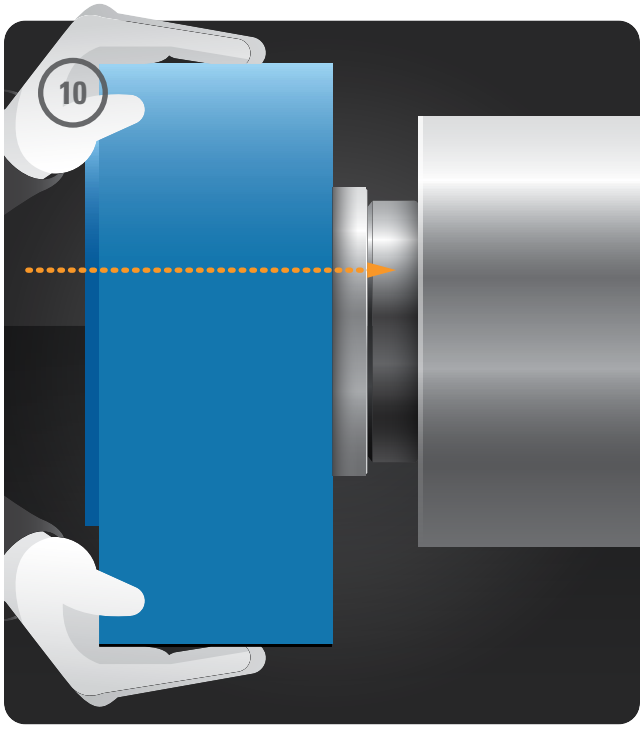


**11.** Install the end plate on the end of the roll to secure the bearing inner ring in place. Secure the end plate using the appropriate fasteners, further secure with a locking fluid (e.g. Loctite 243). Torque the fasteners as specified by the roll manufacturer.

**Note: If the diameter of the end plate is large enough to cover/constrain the bearing's roller and retainer assembly, then the housing assembly cannot fall off the end of the roll. If the end plate covers only the bearing inner ring, then the housing assembly can fall off the end of the roll, possibly causing injury. In this case, the end plate must be replaced or the snap ring version of the bearing installed. If you are interested in learning about the snap ring version, contact your Timken representative.**

**12.** Once in place, rotate the housing back and forth to check for bearing freedom of motion. If the bearing binds or cannot move freely, remove the bearing and diagnose the problem. Before being put back into service, the bearing must rotate freely on the roll.

**13.** Apply sealant to the housing cover, then install the housing cover and bolt it in place according to manufacturer's specification. If the end cover has a lubrication groove, ensure that it is in the right position.

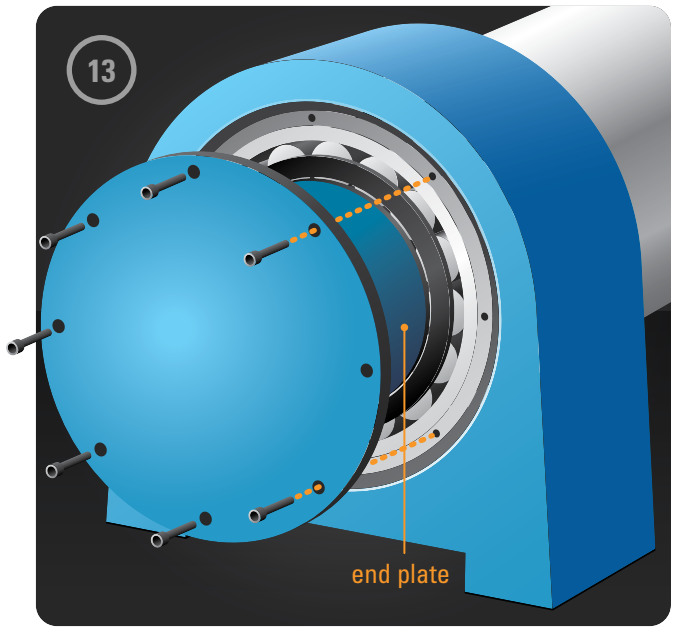


## SHORT ROLL SECTIONS COMBINED TO FORM SUPPORT ROLL

Some continuous casters use a slab support roll design that includes two or more short roll sections combined to make up the total roll width. Each separate roll section has a bearing and housing at

each end, with the housings mounted back-to-back in the intermediate support positions. Driven rolls incorporate a coupling arrangement between the roll ends in these intermediate support positions.

ADAPT bearing installation in these positions can be treated as an end of roll position and the above procedures used. Note, however, that adjustments to the procedure may be necessary to accommodate the specific design of the equipment. One example of a variation may be that the end plate also functions as one half of a coupling between the adjacent roll ends. Another example is the elimination of the housing covers because the housings are mounted with their faces in contact with each other.

## INSTALLATION: CENTER OF ROLL POSITION

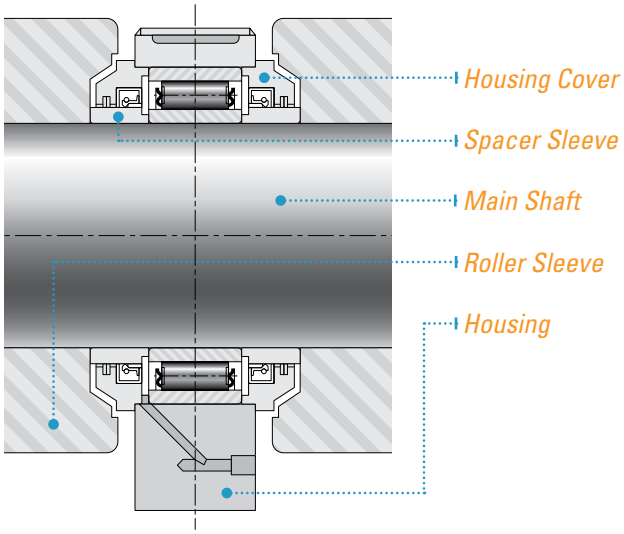


**1.** Check the inboard roll spacers for any damage. Remove any raised metal or other physical damage with the appropriate tools.

**2.** Apply an anti-seize lubricant or a thin layer of grease to the area on the roll where the bearing inner ring will be located.

**3.** If the bearing housing has removable covers on both sides, install one of the covers on the housing and bolt it in place according to manufacturer's specification. If the end cover has a lubrication groove, ensure it is in the right position.

**4.** Apply a thin coat of oil or grease to the inside of the housing to make it easier to insert the bearing outer ring.




**5.** Remove the roller assembly from the outer ring prior to assembling the outer ring in the housing. The roller-retainer assembly and outer ring are matched and the roller-retainer must be kept together during the mounting process. Place the bearing outer ring (without the roller assembly) into the housing and press it into place. The outer ring should be a loose fit and easily mount in the housing. If it is a tight fit, you can use an induction heater to warm the housing to 100°C [212°F]. If needed, you can also use a soft-faced mallet to tap the ring into position.

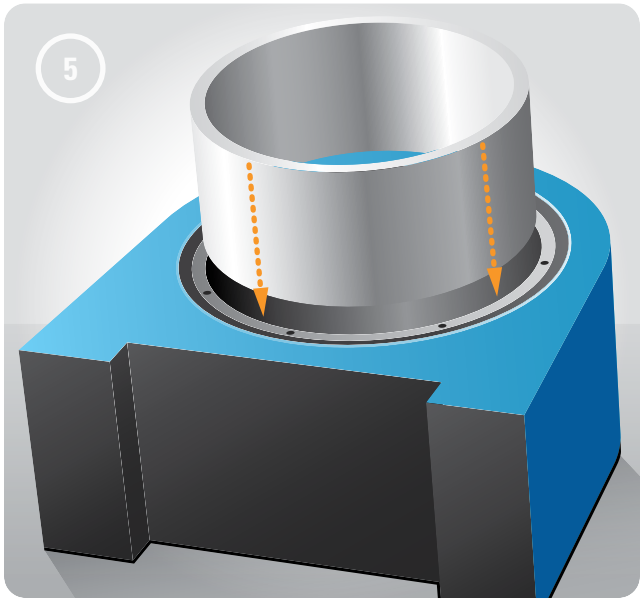

**6.** Use a feeler gauge to ensure that the contact face of the bearing outer ring is in contact with the housing shoulder or inboard cover.

**7.** Insert the matched roller-retainer assembly into the outer ring. Guide the rollers into the outer ring so they do not catch on the outer ring corner.

**Note: Take care when feeding the rollers into the outer ring to avoid scratching the bearing components. Rotate the roller assembly as it is lowered into the outer ring.**

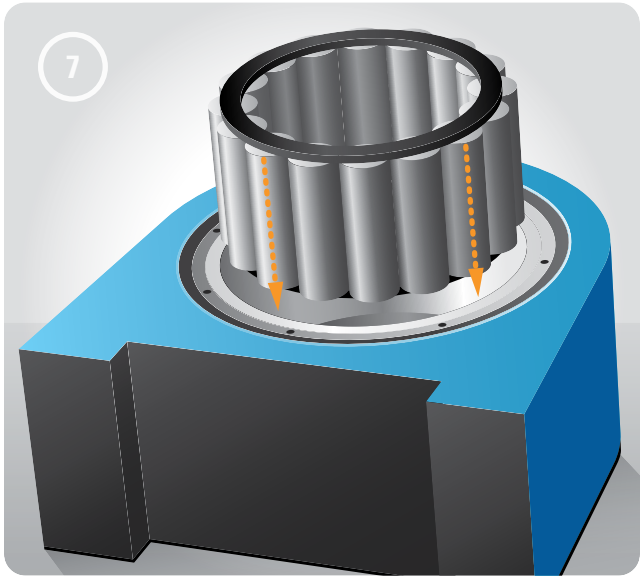


**8.** Lubricate the rollers using the same oil or grease used on your caster. There is no need to remove the anti-rust coating on the bearing. Rotate the roller assembly one revolution to distribute the lubricant.

**9.** Install the bearing inner ring in the bearing. Rotate the inner ring back and forth as it is installed in order to minimize the chance of damage to the rollers or inner ring. You can use an induction heater to warm the inner ring to 100ºC [212ºF] to facilitate installation on the roll end in Step 13. Do not exceed this temperature or the inner-ring may expand to the point that it won't fit into the bearing outer assembly.

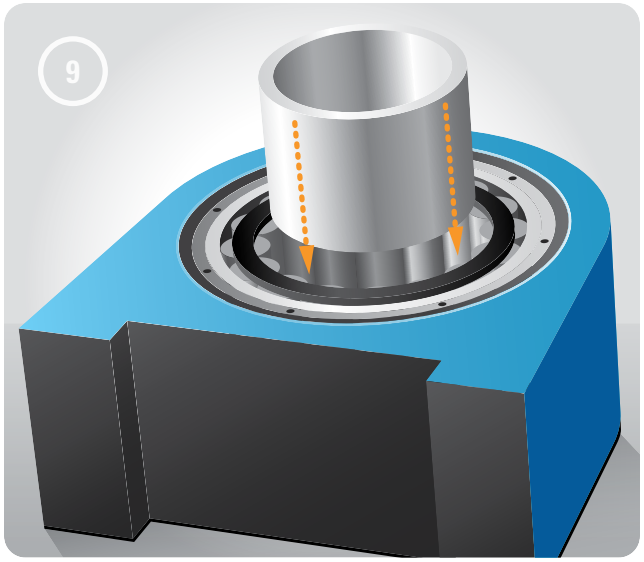


**10.** Install the second cover on the housing and bolt it in place according to manufacturer's specification. Apply sealant to the joint face, then install the housing cover and bolt it in place according to manufacturer's specification. If the end cover has a lubrication groove, ensure it is in the right position.

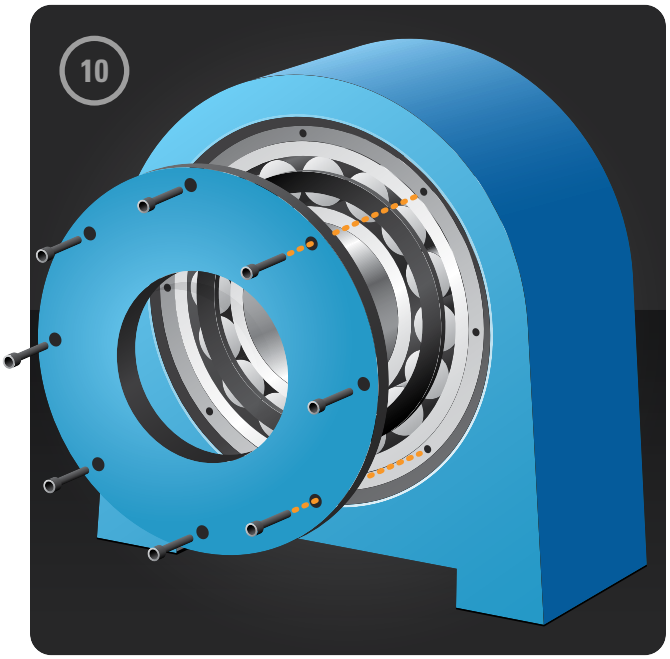


**11.** Apply a light film of oil or grease to the outside surface of the spacers.

**12.** Install the spacer in the cover on one side of the housing assembly, being careful to avoid damage to

the seals. If the spacers are a tight fit on the roll, you can use an induction heater to heat them to 100°C [212°F] to ease installation. After installing the spacer on one side, flip the housing to repeat the procedure on the other side. Be careful when flipping the housing to not dislodge the first spacer.

**Note: At this point, the spacers are only held in place by friction with the seals. Be careful as you handle and install the housing assembly on the roll to avoid having one or both fall out of the assembly.**

**13.** Install the complete assembly on the roll, ensuring that the inboard spacer seats firmly against the roll body face and that the outboard spacer is not displaced from the assembly.

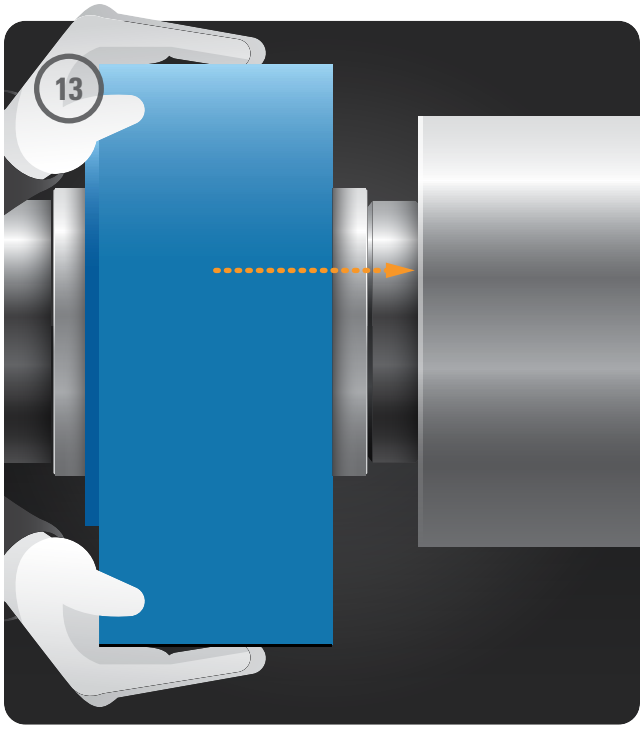


**14.** Rock the housing back and forth in the direction of rotation to check for bearing freedom of motion. If the bearing binds or cannot move freely, remove the bearing and diagnose the problem. Do not put the roll in service until you can verify that the bearing rotates freely on the roll.

**Note: In some cases, it may be easier not to install the inner ring and sleeves into the housing assembly, but instead to install them directly onto the shaft. You can heat the spacers and inner ring to ease installation on the shaft.**

The inboard spacer is installed onto the shaft first, followed by the inner ring. The housing assembly is then installed, followed by the outboard sleeve.

Take great care threading the covers and seals over the spacers and inner ring to avoid damaging the seals.

## ADAPT BEARING PARTS LIST

| Timken Part Number | d | D | C | DUR (Diameter Under Roller) | Co | F | r (Note 1) | $d_s$ | $D_s$ | c | |
|---|---|---|---|---|---|---|---|---|---|---|---|
| | Bore | O.D. | Width | | Static Capacity | Float | Fillet | Shoulder | Shoulder | Retainer Clearance | Weight |
| | mm | mm | mm | mm | kN | ±mm | mm | mm max | mm min | mm min | Kg |
| TA4020V | 100 | 150 | 50 | 112.80 | 580 | 6.0 | 1.3 | 111.0 | 139.5 | 3.5 | 3.0 |
| TA5020V | 100 | 150 | 67 | 112.90 | 872 | 5.0 | 1.5 | 110.6 | 141.0 | 3.5 | 4.3 |
| TA3120V | 100 | 165 | 52 | 116.19 | 653 | 5.0 | 2.0 | 113.0 | 153.0 | 4.0 | 4.5 |
| TA4022V | 110 | 170 | 60 | 125.40 | 810 | 6.0 | 1.8 | 123.5 | 157.0 | 4.0 | 4.9 |
| TA4122V | 110 | 180 | 69 | 127.90 | 988 | 6.0 | 2.0 | 123.9 | 166.0 | 4.5 | 7.1 |
| TA4024V | 120 | 180 | 60 | 135.50 | 880 | 6.0 | 1.8 | 133.5 | 167.0 | 4.0 | 5.4 |
| TA4026V | 130 | 200 | 69 | 147.80 | 1140 | 6.0 | 1.8 | 146.0 | 185.0 | 4.5 | 7.8 |
| TA4126V | 130 | 210 | 80 | 150.00 | 1390 | 6.0 | 2.0 | 146.1 | 194.0 | 5.0 | 11.2 |
| TA2226V | 130 | 230 | 64 | 154.49 | 1070 | 6.0 | 2.5 | 149.5 | 210.5 | 5.6 | 11.6 |
| TA4028V | 140 | 210 | 69 | 158.00 | 1220 | 6.0 | 1.8 | 156.0 | 195.0 | 4.0 | 8.4 |
| TA4030V | 150 | 225 | 75 | 169.30 | 1430 | 6.4 | 1.9 | 167.0 | 209.0 | 4.0 | 10.4 |
| TA4130V | 150 | 250 | 100 | 175.40 | 1990 | 8.0 | 2.0 | 170.9 | 229.5 | 5.8 | 20.5 |
| TA4032V | 160 | 240 | 80 | 180.60 | 1680 | 6.0 | 1.9 | 178.5 | 223.0 | 5.2 | 12.9 |
| TA4034V | 170 | 260 | 90 | 193.40 | 1980 | 7.4 | 1.9 | 191.5 | 240.5 | 5.2 | 17.3 |

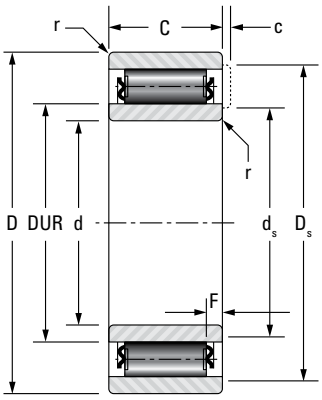


Please contact your Timken sales representative for additional sizes and designs.

Note 1: Maximum shaft or housing fillet radius to clear corners of bearing

All bearings have a misalignment capability of ±0.5 degrees [8.7 millirads]

## BEARING TOLERANCES AND RADIAL INTERNAL CLEARANCES

| Timken Part Number | Bore Diameter | Outside Diameter | Ring Width | Radial Internal Clearance | | | |
|---|---|---|---|---|---|---|---|
| | Variation from Nominal | Variation from Nominal | Variation from Nominal | | | | |
| | micron [µm] | micron [µm] | micron [µm] | micron [µm] | | | |
| | +00 | +00 | +00 | C3 Min | C3 Max | C4 Min | C4 Max |
| TA4020V | -20 | -18 | -200 | 75 | 130 | 105 | 160 |
| TA5020V | -20 | -18 | -200 | 75 | 130 | 105 | 160 |
| TA3120V | -20 | -25 | -200 | 75 | 130 | 105 | 160 |
| TA4022V | -20 | -25 | -200 | 85 | 145 | 125 | 185 |
| TA4122V | -20 | -25 | -200 | 85 | 145 | 125 | 185 |
| TA4024V | -20 | -25 | -200 | 85 | 145 | 125 | 185 |
| TA4026V | -25 | -30 | -250 | 100 | 165 | 145 | 210 |
| TA4126V | -25 | -30 | -250 | 100 | 165 | 145 | 210 |
| TA2226V | -25 | -30 | -250 | 100 | 165 | 145 | 210 |
| TA4028V | -25 | -30 | -250 | 100 | 165 | 145 | 210 |
| TA4030V | -25 | -30 | -250 | 115 | 185 | 165 | 235 |
| TA4130V | -25 | -30 | -250 | 115 | 185 | 165 | 235 |
| TA4032V | -25 | -30 | -250 | 115 | 185 | 165 | 235 |
| TA4034V | -25 | -35 | -250 | 120 | 190 | 170 | 240 |

## RECOMMENDED END PLATE DIMENSIONS

| Timken Part Number | $d_s$ | C | $E_s$ |
|---|---|---|---|
| TA4020V | 111.0 | 3.5 | 131.0 |
| TA5020V | 112.5 | 3.0 | 132.5 |
| TA3120V | 115.8 | 3.7 | 142.0 |
| TA4022V | 123.5 | 4.0 | 148.0 |
| TA4122V | 127.6 | 4.3 | 155.0 |
| TA4024V | 133.5 | 4.0 | 158.0 |
| TA4026V | 146.0 | 4.5 | 174.0 |
| TA4126V | 149.6 | 4.3 | 181.0 |
| TA2226V | 154.0 | 5.3 | 193.3 |
| TA4028V | 156.0 | 4.5 | 183.0 |
| TA4030V | 167.0 | 4.5 | 196.0 |
| TA4130V | 175.0 | 5.3 | 213.7 |
| TA4032V | 178.5 | 5.2 | 210.0 |
| TA4034V | 191.5 | 4.8 | 225.0 |

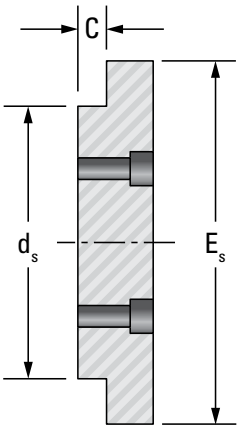


## SUGGESTED FITTING PRACTICE

T=Tight, L=Loose

| Timken Part Number | Shaft Dia | Shaft Fit | Housing Bore | Housing Fit |
|---|---|---|---|---|
| | g6 mm | mm | G6 mm | mm |
| TA4020V | 99.966 - 99.988 | .008T - .034L | 150.014 - 150.039 | .014L - .057L |
| TA5020V | 99.966 - 99.988 | .008T - .034L | 150.014 - 150.039 | .014L - .057L |
| TA3120V | 99.966 - 99.988 | .008T - .034L | 165.014 - 165.039 | .014L - .064L |
| TA4022V | 109.966 - 109.988 | .008T - .034L | 170.014 - 170.039 | .014L - .064L |
| TA4122V | 109.966 - 109.988 | .008T - .034L | 180.014 - 180.039 | .014L - .064L |
| TA4024V | 119.966 - 119.988 | .008T - .034L | 180.014 - 180.039 | .014L - .064L |
| TA4026V | 129.961 - 129.986 | .011T - .039L | 200.015 - 200.044 | .015L - .074L |
| TA4126V | 129.961 - 129.986 | .011T - .039L | 210.015 - 210.044 | .015L - .074L |
| TA2226V | 129.961 - 129.986 | .011T - .039L | 230.015 - 230.044 | .015L - .074L |
| TA4028V | 139.961 - 139.986 | .011T - .039L | 210.015 - 210.044 | .015L - .074L |
| TA4030V | 149.961 - 149.986 | .011T - .039L | 225.015 - 225.044 | .015L - .074L |
| TA4130V | 149.961 - 149.986 | .011T - .039L | 250-015 - 250.044 | .015L - .074L |
| TA4032V | 159.961 - 159.986 | .011T - .039L | 240.015 - 240.044 | .015L - .074L |
| TA4034V | 169.961 - 169.986 | .011T - .039L | 260.017 - 260.049 | .017L - .084L |

Note: An f7 shaft and an H7 housing are also acceptable.



# TIMKEN

The Timken team applies their know-how to improve the reliability and performance of machinery in diverse markets worldwide. The company designs, makes and markets high-performance mechanical components, including bearings, gears, chain and related mechanical power transmission products and services.

Stronger. **Commitment.** Stronger. **Value.** Stronger. **Worldwide.** Stronger. **Together.** | **Stronger.** By Design.

**www.timken.com**

11-13:29 Order No. 10477 | Timken® is a registered trademark of The Timken Company. | © 2013 The Timken Company | Printed in U.S.A.