TIMKEN

TIMKEN® MOUNTED TAPERED ROLLER BEARING CATALOG

ABOUT THE TIMKEN COMPANY

As a global leader in bearings and power transmission systems, Timken focuses on precise solution design, materials and craftsmanship to deliver reliable and efficient performance that improves productivity and uptime. Timken offers a full range of bearings, belts, chains, couplings, gears and lubricants, along with rebuild and repair services.

Timken (NYSE; TKR; www.timken.com) applies its proven expertise in metallurgy, tribology and mechanical power transmission to create innovative approaches to customers' complex needs. Global availability of products and engineering talent, combined with exceptional service delivery across markets, makes Timken a preferred choice worldwide.

To view more Timken catalogs, go to **www.timken.com/catalogs** for interactive versions, or to download our catalog app to your smart phone or mobile device.

TIMKEN® MOUNTED TAPERED ROLLER BEARING CATALOG INDEX

INTRODUCTION . . . 2
HOW TO USE THIS CATALOG . . . 4
SHELF LIFE AND STORAGE . . . 4
WARNINGS . . . 8

ENGINEERING
- Product Information . . . 8
- Size Range and Configuration . . . 10
- Bearing Selection and Life Calculations . . . 10
- Load and Speed Rating Tables . . . 13
- Housing Ratings . . . 14
- Type E Installation and Lubrication . . . 16
- Self Aligning Installation and Lubrication . . . 19

TYPE E MOUNTED TAPERED ROLLER BEARING PRODUCT DATA TABLES
- Nomenclature . . . 24
- Pillow Block: Two-Bolt Base . . . 26
  - Single Locking Collar . . . 26
  - Double Locking Collar . . . 27
- Pillow Block: Four-Bolt Base . . . 28
  - Single Locking Collar . . . 28
  - Double Locking Collar . . . 29
- Flange: Four-Bolt . . . 30
  - Single Locking Collar . . . 30
  - Double Locking Collar . . . 31
- Flange: Piloted . . . 32
  - Single Locking Collar . . . 32
  - Double Locking Collar . . . 33
- Take-Up: Wide Slot . . . 34
  - Single Locking Collar . . . 34
  - Double Locking Collar . . . 35
- Take-Up: Top Angle . . . 36
  - Single Locking Collar . . . 36
  - Double Locking Collar . . . 37
- Type E End Covers . . . 38

SELF-ALIGNING MOUNTED TAPERED ROLLER BEARINGS PRODUCT DATA TABLES
- Nomenclature . . . 40
- Type E Self-Aligning (ESA) Mounted Tapered Roller Bearing Pillow Block: Two-Bolt Base . . . 42
  - Single Locking Collar . . . 42
  - Double Locking Collar . . . 43
- Type E Self-Aligning (ESA) Mounted Tapered Roller Bearing Pillow Block: Four-Bolt Base . . . 44
  - Single Locking Collar . . . 44
  - Double Locking Collar . . . 45
- Type E Self-Aligning (ESA) Mounted Tapered Roller Bearing: Four-Bolt Flange Block . . . 46
  - Single Locking Collar . . . 46
  - Double Locking Collar . . . 48
- Self-Aligning SAF (SAFSA) Mounted Tapered Roller Bearing Pillow Block: Two-Bolt Base . . . 50
  - Single Locking Collar . . . 50
  - Double Locking Collar . . . 52
- Self-Aligning SAF (SAFSA) Mounted Tapered Roller Bearing Pillow Block: Four-Bolt Base . . . 54
  - Single Locking Collar . . . 54
  - Double Locking Collar . . . 56
- Self-Aligning DI (DISA) Mounted Tapered Roller Bearing Pillow Block: Two-Bolt Base . . . 58
  - Double Locking Collar . . . 58
- Self-Aligning DI (DISA) Mounted Tapered Roller Bearing Pillow Block: Four-Bolt Base . . . 60
  - Double Locking Collar . . . 60
- Self-Aligning Type K (KSA) Mounted Tapered Roller Bearing Pillow Block: Two-Bolt Base . . . 62
  - Single Locking Collar . . . 62
- Self-Aligning Type K (KSA) Mounted Tapered Roller Bearing Pillow Block: Four-Bolt Base . . . 64
  - Single Locking Collar . . . 64
- Self-Aligning SN (SNSA) Mounted Tapered Roller Bearing Pillow Block: Two-Bolt Base . . . 66
  - Double Locking Collar . . . 66
- Self-Aligning SN (SNSA) Mounted Tapered Roller Bearing Pillow Block: Four-Bolt Base . . . 68
  - Double Locking Collar . . . 68
- Self-Aligning Mounted Tapered Roller Bearing Cartridges . . . 70
  - Single Locking Collar . . . 70
  - Double Locking Collar . . . 72
- Self-Aligning Mounted Tapered Roller Bearing Secondary Covers . . . 74

TIMKEN® MOUNTED TAPERED ROLLER BEARINGS

BEAT EXPECTATIONS. EXCEED STANDARDS.

In the harshest, most demanding operating conditions, industrial applications need product that can manage high axial and radial loads while avoiding contamination. Timken® Type E and Self-Aligning Mounted Tapered Roller Bearings, also known as housed units, can meet these challenges head-on.

You gain a product with a better load carrying capacity than industry standard tapered roller bearing designs. This makes our Type E and self-aligning mounted bearings an ideal fit for industries like pulp and paper, power generation, mining, cement and aggregate.

TYPE E MOUNTED TAPERED ROLLER BEARINGS

Timken Type E Mounted Tapered Roller Bearings feature enhanced core components that can help reduce maintenance costs, increase uptime and lower overall cost of ownership. They include:

- High performance seals offering better grease retention and protection against mud, water and salt ingress
- Locking collars providing maximum corrosion resistance, better locking power and less set screw back-out, even in severe applications
- E-coated housings featuring superior corrosion resistance over black oxide or powder coating, and interchangeable bolt holes and shaft centerline dimensions
- Premium tapered roller bearing delivering longer bearing life and better performance

TIMKEN SELF-ALIGNING MOUNTED TAPERED ROLLER BEARINGS

Timken Self-Aligning Mounted Tapered Roller Bearings are built better from the inside out. They offer lower bearing operating temperatures, improved lube film thickness and reduced internal stresses thanks to:

- Steel cartridges designed to accept +/- 4 degrees of misalignment
- Cast steel housings which can accept secondary sealing covers
- Powder-coated housings and E coated collars that can protect against corrosion
- Timken tapered roller bearings yielding a design life that is 47% higher than leading competitors
- Optimized bearing profiles and improved surface finishes

Self-Aligning Mounted Tapered Roller Bearings are available in two-bolt pillow block sizes 1 3/16 -3 ½ in. (35-90 mm) and in four-bolt pillow block sizes 2 ¼ - 5 in. (60-125 mm).

And with the most robust sealing system in the industry, both Type E and self-aligning mounted bearings can last longer against contamination and moisture.

TIMKEN TYPE E MOUNTED TAPERED ROLLER BEARING SECONDARY SEALING SYSTEM

Unlock premium performance with an unrivaled multi-point internal and external sealing solution. Our full range of end covers protects bearings and improves grease retention. Users reported significantly increased uptime in severely contaminated and wet environments.

- Available in the full range of units from 1 3⁄16 in. to 7 in. and 35 mm to 180 mm.
- Outboard contact lip provides initial protection from ingress and inboard contact lip provides secondary protection.
- A triple barrier internal seal withstands abrasion and keeps bearings performing even in harsh, dirty environments.
- Rugged, cost effective covers are designed to fight heavy contamination in industries where particulates are a challenge.
- All units can accommodate end covers, which can be purchased separately.

UNRIVALED MULTI-POINT SEALING SYSTEM

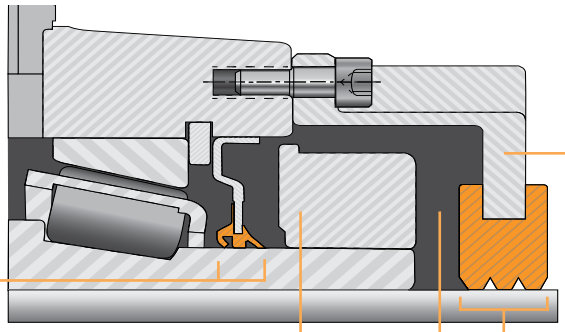

Upgraded triple-barrier internal bearing seal • **Two contact lips and one rigid middle labyrinth section** to help retain grease and reduce contamination ingress • **New enhanced seal material to provide greater performance** with two times more abrasion resistance than the industry standard nitrile seal	Locking collar	Grease in cavity of end cover	Triple-lip external rubber through shaft seal	External secondary cover
3	1	1	3	1

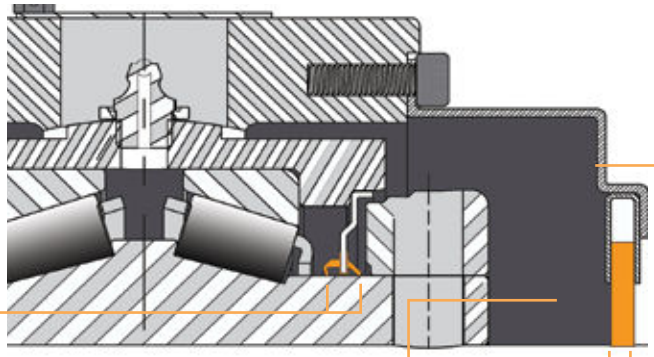

• **Two contact lips and one rigid middle labyrinth section** to help retain grease and reduce contamination ingress • **New enhanced seal material to provide greater performance** with two times more abrasion resistance than the industry standard nitrile seal	**Full grease pack in cover** (all covers have grease zerks)	**Single lip Teflon through Shaft Seal**	**External through shaft cover** (steel)
3	1	1	1

HOW TO USE THIS CATALOG

We designed this catalog to help you find the Timken bearings best suited to your equipment needs and specifications.

This publication contains dimensions, tolerances and load ratings, as well as engineering sections describing fitting practices for shafts and housings, internal clearances and other bearing features. For more information, please use the Timken Engineering Manual (order no. 10424). It provides valuable assistance in the initial consideration of the type and characteristics of the bearings that may best suit your particular needs.

Updates are made periodically to this catalog. Visit www.timken.com/catalogs for the most recent version of the Timken® Mounted Tapered Roller Bearing Catalog.

SHELF LIFE AND STORAGE OF GREASE-LUBRICATED BEARINGS AND COMPONENTS

To help you get the most value from our products, Timken provides guidelines for the shelf life of grease-lubricated ball and roller bearings, components and assemblies. Shelf life information is based on Timken and industry test data and experience.

SHELF LIFE

Shelf life should be distinguished from lubricated bearing and component design life as follows:

Shelf life of the grease-lubricated bearing and component represents the period of time prior to use or installation.

The shelf life is a portion of the anticipated aggregate design life. It is impossible to accurately predict design life due to variations in lubricant bleed rates, oil migration, operating conditions, installation conditions, temperature, humidity and extended storage.

TIMKEN IS NOT RESPONSIBLE FOR THE SHELF LIFE OF ANY BEARING/COMPONENT LUBRICATED BY ANOTHER PARTY.

European REACH compliance

Timken lubricants, greases and similar products sold in standalone containers or delivery systems are subject to the European REACH (Registration, Evaluation, Authorization and Restriction of CHemicals) directive. For import into the European Union, Timken can sell and provide only those lubricants and greases that are registered with ECHA (European CHemical Agency). For further information, please contact your Timken engineer.

STORAGE

Timken suggests the following storage guidelines for our finished products (bearings, components and assemblies, referred to as "products"):

- Unless directed otherwise by Timken, products should be kept in their original packaging until they are ready to be placed into service.
- Do not remove or alter any labels or stencil markings on the packaging.
- Products should be stored in such a way that the packaging is not pierced, crushed or otherwise damaged.
- After removing the product from its packaging, cleaning is suggested just before installation for certain food and beverage applications.
- When removing a product that is not individually packaged from a bulk pack container, the container should be resealed immediately after the product is removed.
- Do not use product that has exceeded its shelf life as defined in the Timken shelf life guidelines statement.
- The storage area temperature should be maintained between 0° C (32° F) and 40° C (104° F); temperature fluctuations should be minimized.
- The relative humidity should be maintained below 60 percent and the surfaces should be dry.
- The storage area should be kept free from airborne contaminants such as, but not limited to dust, dirt, harmful vapors, etc.
- The storage area should be isolated from undue vibration.
- Extreme conditions of any kind should be avoided.

Due to the fact that Timken is not familiar with your particular storage conditions, we strongly suggest following these guidelines. However, you may be required by circumstances or applicable government requirements to adhere to stricter storage requirements.

Most bearing components typically ship protected with a corrosion-preventive compound that is not a lubricant. These components may be used in oil-lubricated applications without removal of the corrosion-preventive compound. When using some specialized grease lubrications, we advise you to remove the corrosion-preventive compound before packing the bearing components with suitable grease.

Be careful in selecting lubrication, however, since different lubricants are often incompatible.

When you receive a bearing shipment, do not remove products from their packaging until they are ready for mounting so they do not become corroded or contaminated.

Store bearings and bearing housings in an appropriate atmosphere so they remain protected for the intended period.

WARNING

Failure to observe the following warnings could create a risk of death or serious injury.

Proper maintenance and handling practices are critical. Failure to follow selection recommendations and installation instructions and to maintain proper lubrication can result in equipment failure.

Overheated bearings can ignite explosive atmospheres. Special care must be taken to properly select, install, maintain, and lubricate mounted unit bearings that are used in or near atmospheres that may contain explosive levels of combustible gases or accumulations of dust such from grain, coal, or other combustible materials. Consult your equipment designer or supplier for installation and maintenance instructions.

CAUTION

Failure to follow these cautions could create a risk of injury.

Do not use damaged mounted bearings. The use of a damaged mounted bearing can result in equipment damage and/or injury.

CAUTION

Failure to follow these cautions may result in property damage.

If hammer and bar are used for installation or removal of a part, use a mild steel bar (e.g., 1010 or 1020 grade). Mild steel bars are less likely to cause release of high-speed fragments from the hammer, bar or the part being removed.

Warnings for this product line are in this catalog and posted on www.timken.com/en-us/products/warnings/PagesTimkenHousedUnitWarnings.aspx.

NOTE

Do not use excessive force when mounting or dismounting the unit.

Follow all tolerance, fit, and torque recommendations.

Always follow the Original Equipment Manufacturer's installation and maintenance guidelines.

Ensure proper alignment.

Never weld mounted units.

Do not heat components with an open flame.

Do not operate at bearing temperatures above 121° C (250° F).

ENGINEERING

Tapered roller bearings can manage broad ranges of speed and many combinations of radial and thrust loads. Other important environmental conditions affect bearing operation, such as low and high temperature, dust and dirt, moisture and unusual mounting conditions.

This engineering section is not intended to be comprehensive, but does serve as a useful guide when selecting Type E mounted bearings.

To view the complete engineering catalog, please visit www.timken.com. To order the catalog, please contact your Timken engineer and request a copy of the Timken Engineering Manual, order number 10424.

Benefits and Features 8

Size Range and Configuration 10

Bearing Selection and Life Calculations 10

Load and Speed Rating Tables 13

Housing Ratings 14

Type E Installation and Lubrication 16

Self Aligning Installation and Lubrication 19

PRODUCT INFORMATION

TIMKEN-DESIGNED TRIPLE-LIP BARRIER SEALS

Features

- Triple-lip design
- Designed to optimize lip contact

Benefits

- Improved grease retention
- Significantly reduced contaminant ingress
- Rotating collar acts as an initial flinger
- Enhanced seal material to provide greater performance with two times more abrasion resistance than the industry standard nitrile seal

COLLAR

Features

- Electrodeposition coating (E-coat)
- 65-degree set screw angle for maximum locking power and greatly reduced set screw back out
- Set screw
- Machined steel

Benefits

- Better corrosion-resistance than black oxide and powder-coating
- All surfaces are protected with E-coat for superior corrosion protection
- Increased locking power
- Greatly reduced set screw back out even in the most severe applications

PREMIUM TIMKEN® TAPERED ROLLER BEARING

Features

- 25 percent more load capacity
- Optimized bearing profiles
- Improved surface finishes
- Super-clean, high-alloy bearing steel

Benefits

- 113 percent increased calculated life over standard Timken® bearings
- Up to three-times greater misalignment capability than standard Timken bearings
- Improved lubrication performance
- Reduced internal stresses
- Enhanced performance

HOUSING

Features

- Electrodeposition coating (E-coat)
- Material spec: ASTM –A48 grade 30 cast iron

Benefits

- Better corrosion resistance than black oxide or powder coating
- Designed to Type E dimensions
- Bolt holes and shaft centerline dimensions interchangeable, conforming with industry practice

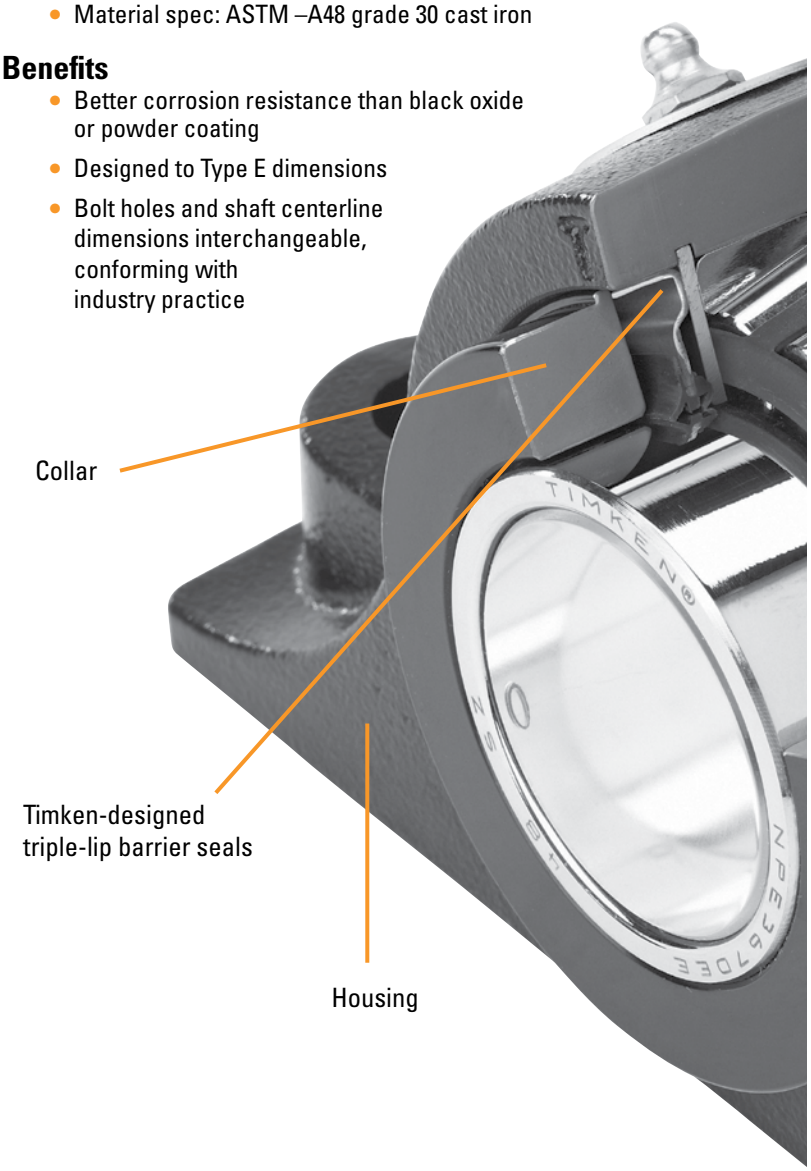

Fig. 1. Self-aligning mounted tapered roller bearings.

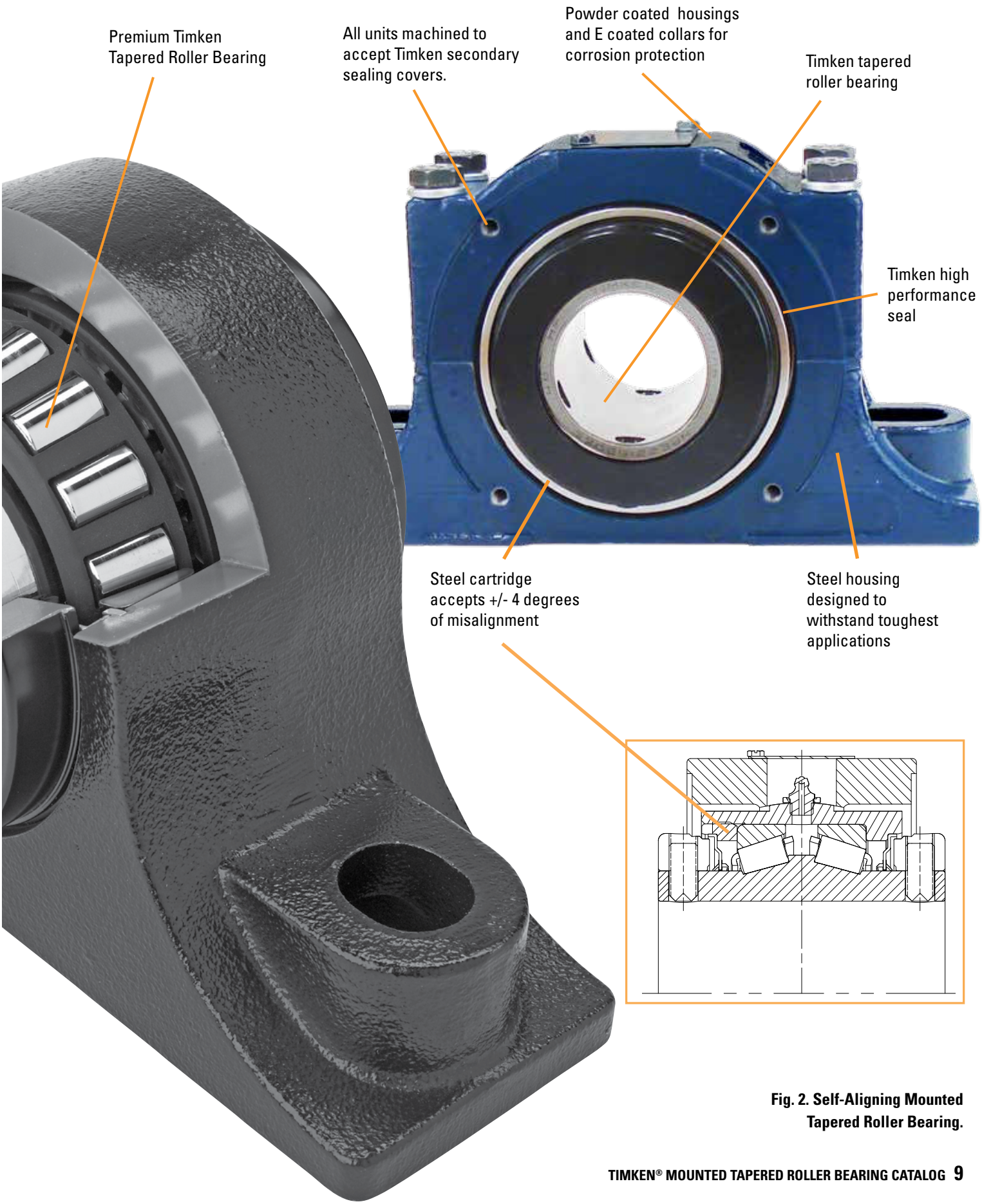

Fig. 2. Self-Aligning Mounted Tapered Roller Bearing.

SIZE RANGE AND CONFIGURATION

Timken Type E mounted tapered bearings are available in a wide variety of sizes and configurations.

TABLE 1. TYPE E MOUNTED TAPERED ROLLER BEARING SHAFT SIZES AND RANGES

Mounted Unit Configuration	Inches (in.)	**Metric (mm)**
Pillow Block: Two-Bolt Base	1 3⁄16 thru 3 1⁄2	**35 thru 90**
Pillow Block: Four-Bolt Base	2 1⁄4 thru 7	**60 thru 180**
Flange: Four-Bolt	1 3⁄16 thru 4 1⁄2	**35 thru 115**
Flange: Piloted	1 3⁄16 thru 5	**35 thru 125**
Take-Up: Wide Slot	1 3⁄8 thru 3	**35 thru 75**
Take-Up: Top Angle	1 3⁄4 thru 4	**45 thru 100**

TABLE 2. SELF-ALIGNING (ESA) MOUNTED TAPERED ROLLER BEARING SHAFT SIZES AND RANGES

Mounted Unit Configuration	Inches (in.)	**Metric (mm)**
Pillow Block: Two-Bolt Base	1 3⁄16 thru 3 1⁄2	**35 thru 90**
Pillow Block: Four-Bolt Base	2 1⁄4 thru 5	**60 thru 125**
Flange: Four-Bolt	1 3⁄16 thru 4 1⁄2	**35 thru 115**

BEARING SELECTION AND LIFE CALCULATIONS

Many different performance criteria exist that dictate how a bearing should be selected. These criteria include bearing fatigue life, rotational precision, power requirements, temperature limits, speed capabilities, sound and more. The life can also be limited by other system components such as the shaft, shaft interface and the housing. This section deals primarily with bearing life as related to material associated fatigue. The standard mounted tapered roller bearing seal is rated for up to 250° F.

BEARING LIFE

Bearing life is defined here as the length of time, or number of revolutions, until a fatigue spall of 6 mm^2 (0.01 $in.^2$) develops. Since metal fatigue is a statistical phenomenon, the life of an individual bearing is impossible to precisely predetermine. Bearings that may appear to be identical can exhibit considerable life scatter when tested under identical conditions. Thus, it is necessary to base life predictions on a statistical evaluation of a large number of bearings operating under similar conditions. The Weibull distribution function is commonly used to predict the life of a population of bearings at any given reliability level.

RATING LIFE

Rating life, (L_{10}), is the life that 90 percent of a group of apparently identical bearings will complete or exceed before a fatigue spall develops. The L_{10} life also is associated with 90 percent reliability for a single bearing under a certain load.

BEARING LIFE EQUATIONS

The L_{10} life has been calculated as follows for bearings under radial or combined loading where the dynamic equivalent radial load, (P_r), has been determined.

Tapered roller bearings often use a dynamic load rating (C_{90}) based on 90 million cycles, yielding the equations as follows:

$$L_{10} = \left(\frac{C_{90}}{P_r}\right)^{10/3} (90 \times 10^6) \text{ revolutions}$$

or based on shaft speed, (RPM),

$$L_{10} = \left(\frac{C_{90}}{P_r}\right)^{10/3} \left(\frac{90 \times 10^6}{60n}\right) \text{ hours}$$

Timken has expanded standard life equations to include certain additional variables that can affect bearing performance. The approach that considers these factors in bearing analysis and selection has been termed Bearing Systems Analysis (BSA).

The Timken expanded bearing life equation for tapered roller bearings is:

$$L_{na} = a_1 a_2 a_{3d} a_{3k} a_{3l} a_{3m} a_{3p} \left(\frac{C_{90}}{P_r}\right)^{10/3} \left(\frac{90 \times 10^6}{60n}\right) \text{ hours}$$

Where,

a_1 = Reliability life factor
a_2 = Material life factor
a_{3d} = Debris life factor
a_{3k} = Load zone life factor
a_{3l} = Lubrication life factor
a_{3m} = Misalignment life factor
a_{3p} = Low-load life factor

More details on Life Adjustment Factors can be found in the Timken Engineering Manual (order no. 10424) available on timken.com or by contacting a Timken engineer.

Other factors that can be taken into account within the simple bearing life equation are shock or vibration. These are known to occur in many industrial applications due to combined factors including imbalanced dynamic forces, abusive handling, equipment misuse or neglect. These are difficult to predict.

When these conditions are known or suspected to occur, we suggest that equipment designers use a multiplication factor of ($1.5 \times P_r$) to estimate effects on mounted unit selection and system reliability. Performance testing or advanced analysis is strongly suggested to validate final product selection.

TIMKEN® MOUNTED ROLLER BEARING SELECTION

The double extended tapered roller bearings used in the Type E mounted tapered roller bearings are suited for carrying radial, thrust or a combination of both types of loading. This section will describe the bearing selection process using different methods based on selection criteria and application details.

METHOD 1 – SELECTION TABLE (RADIAL LOADS ONLY)

Note: Based on reference conditions with adequate lubrication.

Determine criteria for bearing selection:

- L_{10} life required.
- Size of bearing based on shaft size (if known).
- Loading conditions (radial) of the application.
- Shaft speed measured by revolutions per minute (RPM).

Use table 3:

- Find speed criteria on upper row.
- Proceed in the column directly below that speed to the equivalent radial load (P_r) that is equal to or greater than that required.
- Follow that row to the left to determine what the minimum shaft size should be for the required L_{10} life (hours). Many values are listed to help in selecting the proper bearing.

METHOD 2 – USING BEARING LIFE EQUATION TO SELECT BEARING FOR A DIFFERENT L_{10} LIFE (RADIAL LOADS ONLY)

If a different life is required than what is found in table 3, it can be calculated from the bearing life equation. Note that each value in the selection table was calculated using this equation. The equation can be rewritten based on the unknown value.

Take the bearing life equation shown previously:

$$L_{10} = \left(\frac{C_{90}}{P_r}\right)^{10/3} \left(\frac{90 \times 10^6}{60n}\right) \text{ hours}$$

Or rewritten as:

$$L_{10} = \left(\frac{C_{90}}{P_r}\right)^{10/3} \left(\frac{1500000}{n}\right) \text{ hours}$$

After calculating the C_{90}, check table 4 to determine the shaft size needed. (Note: Ensure that the application speed does not exceed the maximum RPM found on that same table). Check the radial load, as well, with regard to the maximum allowable slip-fit radial load ($F_{r\text{-}max}$, see table 6). If this value is exceeded, then a tighter line-to-line or press fit is required.

TIMKEN METHOD 3A – DETERMINE EQUIVALENT RADIAL LOADS AND USE BEARING LIFE EQUATION (FOR COMBINED RADIAL- AND THRUST-LOADED APPLICATIONS)

For combined radial- and thrust-loaded applications, it is necessary to calculate an equivalent dynamic radial bearing load, designated by P_r, before applying the L_{10} bearing life equation. The dynamic equivalent radial load is defined as a single radial load that, if applied to the bearing, will result in the same life as the combined loading under which the bearing operates.

Tapered roller bearings are ideally suited to carrying all types of loads – radial, thrust and any combination of both. Due to the tapered design of the bearing, a radial load will induce a thrust reaction that must be opposed by an equal or greater thrust load to keep the bearing cone and cup from separating.

The ratio of the radial to the thrust load and the bearing included cup angle determine the load zone in a given bearing and the number of rollers in contact in the load zone in the bearing. If all the rollers are in contact, the load zone is referred to as being 360 degrees. When only radial load is applied to a tapered roller bearing – for convenience it is assumed in using the traditional calculation method that half the rollers support the load – the load zone is 180 degrees.

For Type E mounted tapered bearings with no external thrust load ($F_a = 0$), the dynamic equivalent radial load (P_r) equals F_r. This P_r value can then be used in the bearing life equation shown on page 10.

For Type E units with thrust loading, table 3 can be used. In this table, only bearing A has an applied thrust load. If bearing B has the applied thrust load, each A in the equations should be replaced by a B and vice versa.

The equations in the first row of table 3 yield single-row equivalent radial loads (P_{rA} and P_{rB}). To find the two-row (Type E mounted unit) life, the following equations must be used to solve for L_{10} life of each bearing row, and then combined for the system unit life:

$$L_{10A} = \left(\frac{C_{90}}{1.74 \times P_{rA}}\right)^{10/3} \left(\frac{1500000}{n}\right) \text{ hours}$$

and,

$$L_{10B} = \left(\frac{C_{90}}{1.74 \times P_{rB}}\right)^{10/3} \left(\frac{1500000}{n}\right) \text{ hours}$$

then,

$$L_{10} = \left[\left(\frac{1}{L_{10A}}\right)^{3/2} + \left(\frac{1}{L_{10B}}\right)^{3/2}\right]^{-2/3} \text{ hours}$$

In the second row of table 3, $P_{rB} = 0$; therefore, $P_{rA} = P_r$ in the standard bearing life equation shown on page 10.

ISO METHOD 3B

The ISO Method uses the following equation to determine the equivalent dynamic radial load:

$P_r = XF_r + YF_a$

Where,

P_r = Dynamic equivalent radial load
F_r = Applied radial load
F_a = Applied axial load
X = Radial load factor
Y = Axial load factor

The values for X and Y are found in table 6. In order to find these values, the value of F_r / F_a must be compared to the e value. Determine if the value is greater than or less than the e and then use the corresponding X and Y values below that formula.

After the P_r value is calculated, then use the bearing life equation as shown on page 10.

ISO METHOD 4 – (THRUST ONLY APPLICATIONS)

Use the equation $P_r = YF_a$. Use Y from table 6 (for $F_a / F_r > e$). Then use this P_r value for the equivalent radial load in the bearing life equation. This value can also be used as the radial load in the load rating selection table 5.

After selection has been made, verify that the application does not exceed the maximum allowable speed, allowable thrust loads and allowable housing loads. Heavy loads should be directed through the base of the units. See table 5 for housing ratings for loads applied upward through the top of the mounted unit perpendicular to the shaft axis. The housings need to be bolted down with adequate strength.

TABLE 3.
DYNAMIC EQUIVALENT RADIAL LOAD CALCULATIONS

Design	Thrust Condition	Dynamic Equivalent Radial Load
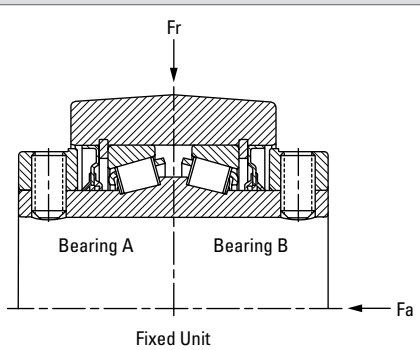	$F_a \leq \frac{0.6\,F_r}{K}$	$P_{rA} = 0.5\,F_r + 0.83\,K\,F_a$ $P_{rB} = 0.5\,F_r - 0.83\,K\,F_a$
	$F_a > \frac{0.6\,F_r}{K}$	$P_{rA} = 0.4\,F_r + K\,F_a$ $P_{rB} = 0$

LOAD AND SPEED RATING TABLES

The table below shows the allowable equivalent radial load for a given shaft size, speed, and L_{10} life under normal operating conditions with adequate lubrication. Refer to the discussion on the previous pages of this catalog to determine the criteria for combinations not shown in this table or for combined load applications.

NOTE

The shaded area in this table indicates radial loads that exceed the maximum allowable slip-fit radial load (Fr-max). Operation at these conditions may require line-to-line (g6 or h6) or light press fit (m6) on the shaft.

TABLE 4.
TYPE E MOUNTED TAPERED BEARING LOAD RATING SELECTION TABLE

Shaft Dia.	Dynamic Capacity C	Basic Dynamic Load Rating C_{90}	Max Speed Timken Triple-Lip Barrier Seal	Life L_{10}	Equivalent Radial Loads Allowed, P_r at Various Speeds, RPM																		
					50	100	150	250	500	750	1000	1200	1360	1530	1640	1750	2060	2420	2730	3050	3320	3820	4490
in. **mm**	**kN** lbs.	**kN** lbs.	RPM	hrs.	lbs.	lbs.	lbs.	lbs.	lbs.	lbs.	lbs.	lbs.	lbs.	lbs.	lbs.	lbs.	lbs.	lbs.	lbs.	lbs.	lbs.	lbs.	lbs.
1 3/16 1 1/4	**65** 14707	**17** 3810	4490	10000	5297	4303	3810	3269	2655	2351	2157	2042	1966	1898	1859	1823	1736	1654	1596	1543	1505	1443	1374
				30000	3810	3095	2740	2351	1910	1691	1551	1468	1414	1365	1337	1311	1249	1190	1148	1110	1082	1038	988
				40000	3495	2839	2514	2157	1752	1551	1423	1347	1297	1252	1227	1203	1145	1091	1053	1018	993	952	907
				60000	3095	2514	2226	1910	1551	1373	1260	1193	1149	1109	1086	1065	1014	966	932	902	879	843	803
				100000	2655	2157	1910	1638	1331	1178	1081	1023	986	951	932	914	870	829	800	774	754	723	689
1 3/8 1 7/16 **35 mm**	**105** 23546	**27** 6100	3820	10000	8481	6889	6100	5233	4251	3764	3453	3269	3148	3039	2976	2919	2780	2649	2555	2471	2409	2310	
				30000	6100	4955	4387	3764	3057	2707	2483	2351	2264	2186	2141	2099	1999	1905	1837	1777	1733	1661	
				40000	5596	4545	4024	3453	2804	2483	2278	2157	2077	2005	1964	1926	1834	1747	1685	1630	1589	1524	
				60000	4955	4024	3564	3057	2483	2199	2017	1910	1839	1775	1739	1705	1624	1547	1492	1444	1407	1349	
				100000	4251	3453	3057	2623	2130	1886	1730	1638	1578	1523	1492	1463	1393	1327	1280	1238	1207	1158	
1 1/2 1 5/8 1 11/16 **40 mm**	**135** 30340	**35** 7860	3320	10000	10928	8877	7860	6743	5477	4850	4449	4212	4057	3916	3835	3761	3582	3413	3292	3184	3104		
				30000	7860	6384	5653	4850	3939	3488	3200	3029	2918	2816	2758	2705	2576	2455	2367	2290	2232		
				40000	7210	5856	5186	4449	3614	3200	2935	2779	2677	2584	2530	2482	2363	2252	2172	2101	2048		
				60000	6384	5186	4592	3939	3200	2833	2599	2461	2370	2288	2241	2197	2092	1994	1923	1860	1813		
				100000	5477	4449	3939	3380	2745	2431	2230	2111	2033	1963	1922	1885	1795	1710	1650	1596	1556		
1 3/4 1 7/8 1 15/16 2 **45 mm** **50 mm**	**177** 39758	**46** 10300	3050	10000	14321	11632	10300	8837	7178	6355	5830	5520	5316	5132	5026	4929	4694	4472	4313	4172			
				30000	10300	8366	7408	6355	5162	4571	4193	3970	3824	3691	3615	3545	3376	3217	3102	3001			
				40000	9448	7674	6795	5830	4735	4193	3846	3642	3507	3386	3316	3252	3097	2951	2846	2753			
				60000	8366	6795	6017	5162	4193	3713	3406	3225	3106	2998	2936	2879	2742	2613	2520	2437			
				100000	7178	5830	5162	4429	3597	3185	2922	2766	2664	2572	2519	2470	2352	2241	2162	2091			
2 3/16 **55 mm**	**187** 42074	**48** 10900	2730	10000	15155	12310	10900	9351	7596	6726	6170	5841	5626	5431	5319	5216	4967	4733	4565				
				30000	10900	8854	7840	6726	5463	4837	4437	4201	4046	3906	3825	3752	3572	3404	3283				
				40000	9999	8121	7191	6170	5011	4437	4070	3854	3712	3583	3509	3441	3277	3122	3012				
				60000	8854	7191	6368	5463	4437	3929	3604	3412	3287	3172	3107	3047	2902	2765	2667				
				100000	7596	6170	5463	4687	3807	3371	3092	2928	2820	2722	2666	2614	2489	2372	2288				
2 1/4 2 7/16 2 1/2 **60 mm** **65 mm**	**199** 44776	**51** 11600	2420	10000	16129	13100	11600	9952	8083	7158	6566	6216	5987	5779	5660	5551	5286	5037					
				30000	11600	9422	8343	7158	5814	5148	4722	4471	4306	4157	4071	3992	3802	3622					
				40000	10641	8643	7653	6566	5333	4722	4332	4101	3950	3813	3734	3662	3487	3323					
				60000	9422	7653	6777	5814	4722	4181	3836	3631	3498	3376	3307	3243	3088	2942					
				100000	8083	6566	5814	4988	4051	3587	3291	3116	3001	2897	2837	2782	2649	2524					
2 11/16 2 3/4 2 15/16 3 **70** **75**	**211** 47478	**55** 12300	2060	10000	17102	13891	12300	10552	8571	7590	6962	6591	6348	6128	6002	5886	5605						
				30000	12300	9991	8846	7590	6165	5459	5007	4741	4566	4407	4317	4233	4031						
				40000	11283	9165	8115	6962	5655	5007	4593	4349	4188	4043	3960	3883	3698						
				60000	9991	8115	7186	6165	5007	4434	4067	3851	3709	3580	3506	3439	3274						
				100000	8571	6962	6165	5289	4296	3804	3489	3304	3182	3071	3008	2950	2809						
3 3/16 3 1/4 3 7/16 3 1/2 **80 mm** **85 mm** **90 mm**	**337** 75656	**87** 19600	1640	10000	27252	22135	19600	16815	13658	12094	11094	10503	10116	9765	9564								
				30000	19600	15920	14097	12094	9823	8698	7979	7554	7276	7023	6879								
				40000	17979	14604	12931	11094	9011	7979	7319	6930	6674	6443	6310								
				60000	15920	12931	11450	9823	7979	7065	6481	6136	5910	5705	5587								
				100000	13658	11094	9823	8428	6845	6061	5560	5264	5070	4894	4793								

LOAD AND SPEED RATING TABLES – *continued*

TABLE 4. TYPE E MOUNTED TAPERED BEARING LOAD RATING SELECTION TABLE – *Continued from previous page.*

Shaft Dia.	Dynamic Capacity C	Basic Dynamic Load Rating C_{90}	Max Speed Timken Triple-Lip Barrier Seal	Life L_{10}	Equivalent Radial Loads Allowed, P_r at Various Speeds, RPM																		
					50	100	150	250	500	750	1000	1200	1360	1530	1640	1750	2060	2420	2730	3050	3320	3820	4490
in. **mm**	**kN** lbs.	**kN** lbs.	RPM	hrs.	lbs.	lbs.	lbs.	lbs.	lbs.	lbs.	lbs.	lbs.	lbs.	lbs.	lbs.	lbs.	lbs.	lbs.	lbs.	lbs.	lbs.	lbs.	lbs.
3 15/16 4 **100 mm**	**462** 103834	**119** 26900	1530	10000	37401	30379	26900	23078	18745	16598	15226	14415	13884	13402									
				30000	26900	21850	19347	16598	13482	11938	10951	10368	9986	9639									
				40000	24676	20043	17747	15226	12367	10951	10045	9511	9160	8842									
				60000	21850	17747	15715	13482	10951	9697	8895	8421	8111	7829									
				100000	18745	15226	13482	11566	9395	8319	7631	7225	6959	6717									
4 7/16 4 1/2 **110 mm** **115 mm**	**567** 127380	**146** 33000	1360	10000	45883	37268	33000	28311	22996	20362	18678	17684	17033										
				30000	33000	26804	23734	20362	16539	14645	13434	12719	12250										
				40000	30271	24588	21772	18678	15172	13434	12323	11667	11237										
				60000	26804	21772	19278	16539	13434	11895	10912	10331	9950										
				100000	22996	18678	16539	14189	11525	10205	9361	8863	8536										
4 15/16 5 **125 mm**	**781** 175630	**201** 45500	1200	10000	63263	51385	45500	39035	31706	28075	25754	24383											
				30000	45500	36957	32725	28075	22804	20192	18523	17537											
				40000	41738	33902	30019	25754	20918	18523	16991	16087											
				60000	36957	30019	26581	22804	18523	16401	15045	14244											
				100000	31706	25754	22804	19564	15891	14071	12907	12220											
5 7/16 5 1/2 5 15/16 6 **135 mm** **140 mm** **150 mm**	**754** 169454	**195** 43900	1000	10000	61279	49774	44074	37812	30712	27195	24946												
				30000	44074	35799	31699	27195	22089	19559	17942												
				40000	40429	32839	29078	24946	20263	17942	16458												
				60000	35799	29078	25747	22089	17942	15887	14573												
				100000	30712	24946	22089	18951	15393	13630	12503												
6 7/16 6 1/2 6 15/16 7 **170 mm** **180 mm**	**1210** 272130	**313** 70500	750	10000	98047	79639	70518	60498	49140	43512													
				30000	70518	57278	50718	43512	35343	31295													
				40000	64687	52542	46524	39914	32420	28707													
				60000	57278	46524	41196	35343	28707	25419													
				100000	49140	39914	35343	30321	24628	21808													

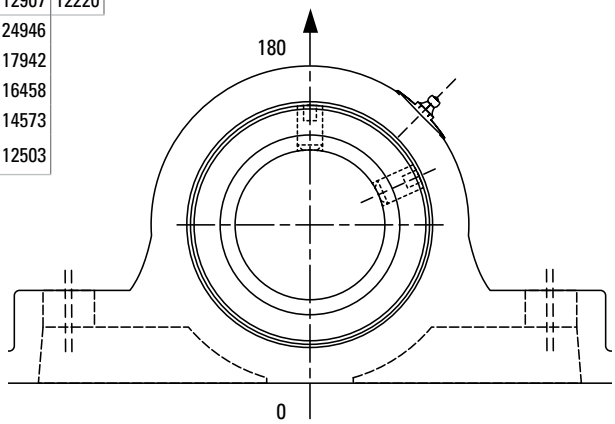

Fig. 3. Type E mounted tapered roller bearing.

HOUSING RATINGS

TABLE 5. HOUSING RATINGS – TYPE E PILLOW BLOCKS: TWO-BOLT BASE, FOUR-BOLT BASE

Shaft Dia.		Maximum Housing Rating Gray Iron at 180°
in.	**mm**	lbs.
1 3/16 thru 1 1/4		1600
1 3/8 thru 1 7/16	**35**	3150
1 1/2 thru 1 11/16	**40**	3000
1 3/4 thru 2	**45 thru 50**	5150
2 3/16	**55**	3500
2 1/4 thru 2 1/2	**60 thru 65**	6550
2 11/16 thru 3	**70 thru 75**	7000
3 3/16 thru 3 1/2	**80 thru 90**	15700
3 15/16 thru 4	**100**	16250
4 7/16 thru 4 1/2	**110 thru 115**	21000
4 15/16 thru 5	**125**	22860
5 7/16 thru 6	**135 thru 150**	50900
6 7/16 thru 7	**170 thru 180**	

These ratings have been calculated for initial bearing selection. These include a nominal safety factor for the standard Type E two- and four-bolt pillow blocks. The following conditions apply: standard cast-iron material, the force is applied perpendicular to the shaft axis, and the housing bolts are properly clamped.

These limits should not be applied to operating conditions that include impact (shock) loads or combined radial and thrust loads that are not directed into the pillow block base.

If heavy cap loads are expected, use the following modifications to mounting method or equipment design: Grade 8 base bolts and hardened washers; ensure that proper installation torque is achieved and is uniform.

If axial loads are expected, provide mechanical stops or shear bars with strength sufficient to support the load. Specification of the strength, material, method of fastening, and precision location are the responsibility of the machinery designer.

TABLE 6.
TAPERED ROLLER BEARING – RADIAL AND THRUST FACTORS; SPEED AND SLIP-FIT LOAD LIMITS

Shaft Dia.	e	$F_a / F_r \leq e$		$F_a / F_r > e$		K Factor	Dynamic Load Rating[1]	Dynamic Capacity	Static Load Rating	Maximum Permissible Thrust Load[2]	Max Speed[3]	Maximum Allowable Slip-Fit Radial Load[4]
		X	Y	X	Y		C_{90}	C	C_0	$F_{a\text{-}max}$		$F_{r\text{-}max}$
in. **mm**							**kN** lbs.	**kN** lbs.	**kN** lbs.	**kN** lbs.	RPM	**kN** lbs.
1 3/16 1 1/4	0.49	0.87	1.77	0.70	2.14	1.23	**17** 3810	**65** 14707	**70** 15760	**9** 2000	4490	**14** 3100
1 3/8 1 7/16 **35 mm**	0.46	0.87	1.89	0.70	2.28	1.31	**27** 6100	**105** 23546	**115** 26000	**12** 2590	3820	**22** 5000
1 1/2 1 5/8 1 11/16 **40 mm**	0.44	0.87	1.96	0.70	2.37	1.36	**35** 7860	**135** 30340	**146** 33000	**12** 2590	3320	**28** 6400
1 3/4 1 7/8 1 15/16 2 **45 mm** **50 mm**	0.33	0.87	2.64	0.70	3.18	1.83	**46** 10300	**177** 39758	**190** 43000	**12** 2590	3050	**37** 8400
2 3/16 55 mm	0.36	0.87	2.38	0.70	2.87	1.65	**48** 10900	**187** 42074	**213** 48200	**15** 3454	2730	**40** 8900
2 1/4 2 7/16 2 1/2 **60 mm** **65 mm**	0.4	0.87	2.17	0.70	2.63	1.51	**51** 11600	**199** 44776	**239** 54000	**15** 3454	2420	**42** 9500
2 11/16 2 3/4 2 15/16 3 **70 mm** **75 mm**	0.46	0.87	1.87	0.70	2.26	1.3	**54** 12300	**211** 47478	**270** 61200	**23** 5181	2060	**44** 10000
3 3/16 3 1/4 3 7/16 3 1/2 **80 mm** **85 mm** **90 mm**	0.5	0.87	1.71	0.70	2.07	1.19	**87** 19600	**337** 75656	**480** 108600	**23** 5181	1640	**71** 16000
3 15/16 4 **100 mm**	0.49	0.87	1.77	0.70	2.14	1.23	**119** 26900	**462** 103834	**681** 154000	**31** 6908	1530	**98** 22000
4 7/16 4 1/2 **110 mm**	0.53	0.87	1.63	0.70	1.97	1.13	**146** 33000	**567** 127380	**833** 188400	**31** 6908	1360	**120** 27000
4 15/16 5 **125 mm**	0.47	0.87	1.83	0.70	2.21	1.27	**201** 45500	**781** 175630	**1176** 266000	**31** 6908	1200	**156** 35000
135 mm 5 7/16 5 1/2 **140 mm** **150 mm** 5 15/16 6	0.49	0.87	1.76	0.70	2.12	1.22	**194** 43900	**754** 169454	**1565** 354000	**38** 8635	1000	**188** 42400
6 7/16 6 1/2 **170 mm** 6 15/16 7 **180 mm**	0.54	0.87	1.61	0.70	1.95	1.12	**312** 70500	**1210** 272130	**2537** 574000	**55** 12282	750	**320** 72000

[1] C_{90} is the dynamic load rating based on a rated life of 90 million revolutions (3000 hrs. at 500 RPM).
[2] $F_{a\text{-}max}$ is based on the limits of the holding force of two properly tightened collars and set screws. When a single collar is installed, 50 percent of the values should be used.
[3] Triple-lip barrier seal.
[4] Operating at conditions where loads approach or exceed $F_{r\text{-}max}$ may require line-to-line (g6 or h6) or light press-fit (m6) on the shaft.
NOTE: The maximum permissible thrust load applies to conditions of slip-fit with set screw mounting or in applications where a large moment loading occurs. The values shown are valid only when two collars and set screws are used.
NOTE: When heavy thrust forces are applied, the friction between the pillow block and base may not be sufficient to prevent movement. Mechanical stops or shear bars with strength sufficient to support the load should be added. Never weld the pillow block or bearing to secure it to the shaft or base.

TYPE E INSTALLATION AND LUBRICATION

INSTALLATION

Proper installation of the mounted unit is necessary. This includes the use of shafts that are clean, free from nicks and burrs, straight and of proper diameter. Follow table 7. The recommended shaft tolerances shown in table 7 are for normal loaded applications. Refer to table 4 to verify the maximum allowable slip-fit radial load ($F_{r\text{-}max}$) and to determine if a tighter fit is required.

Do not mount the bearing on a worn section of the shaft. Use of shafts with hardness greater than HRC 45 will reduce the effectiveness of locking devices.

Also, it is necessary that the mounted units and shafts are in alignment (fig. 4). Verify that the mounting surfaces are in the same flat plane to help make sure good alignment is achieved. If shimming is required to minimize misalignment, use full shims across the entire housing base (fig. 5). The bolts then need to be alternately torqued securely to their mounting supports.

Flat washers should be used when installing any kind of mounted unit (fig. 5). Washers should be properly sized to the bolt diameter. Typically, the diameters of SAE washers are too small to properly cover the bolt slots on the units. After the locking collar(s) are lined up flush with the end of the cone (inner ring) face (fig. 6), apply thread locker as needed to set screws, then tighten properly per table 8. Set screws in multiple units should be aligned to each other (fig. 7).

LUBRICATION

To help maintain a rolling bearing's antifriction characteristics, lubrication is needed to:

- Minimize rolling resistance due to deformation of the rolling elements and raceway under load by separating the mating surfaces.
- Minimize sliding friction occurring between rolling elements, raceways and cage.
- Protect from corrosion and, with grease lubrication, from contaminant ingress.

Bearings have been factory prelubricated with Timken Premium All Purpose Industrial Grease, which is an NLGI No. 2 lithium-complex-based grease. This is suitable for normal operating conditions. Units should be relubricated with the Timken grease or one that is compatible and made for roller bearings.

It is vital that the greases used are compatible. Please consult with a Timken engineer for the grease specifications if the use of a grease other than the Timken grease mentioned above is needed.

Normal service is considered as operation in a clean, dry environment at temperatures between -34º C to +82º C (-30º F and +180º F). If service is beyond normal conditions due to speed, temperature or exposure to moisture, dirt or corrosive chemicals, periodic relubrication may be advisable. For extreme conditions or conditions in which special chemicals are used, consult your Timken engineer.

After extended storage or periods when the unit is not in operation, fresh grease should be added.

For units operating in dirty or wet environments, the bearing should contain as much grease as possible, based on the shaft speed, to help protect against contamination. For slower applications, with shaft speeds typically less than 200 RPM, the unit should have additional grease added at start-up to fill the bearing.

Lubrication affects the bearing operating temperature as well. If the bearing does not have enough grease, this could lead to higher temperature operation due to inadequate lubrication film thickness. Excessive grease will lead to higher operating temperatures due to grease churning. This can cause bearing overheating. To avoid this, it may be necessary to remove some of the grease inside the unit. The grease fitting may be removed briefly in this circumstance to allow excess grease to purge. The grease fitting must be put back in place. It is best to observe the bearing and its temperature to adjust the lubrication as needed.

RELUBRICATION CYCLE

Adequate lubrication is an essential element affecting the bearing life. The two primary considerations that determine the relubrication cycle on any application are operating temperature and contamination. Every attempt should be made to maintain seals at peak efficiency.

The higher the temperature, the more rapidly the grease oxidizes. Grease life is reduced by approximately half for every 10º C (18º F) rise in temperature. The higher the operating temperature, the more often the grease must be replenished. Table 9 can be used as a suggested initial point of reference. Relubrication frequency and quantity intervals are best developed through experience for each application based on types of service, which may differ from the suggestions in table 9.

When the bearing is not in operation for an extended period of time, grease should be added to prevent corrosion.

Table 9 shows general lubrication suggested starting points only. Please read the entire installation instructions prior to using these tables. Applications should be regularly reviewed and lubrication amounts and intervals modified as needed to assure best results.

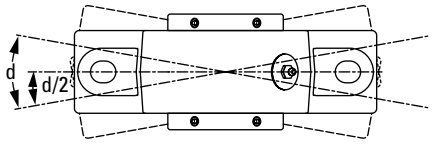

ALIGN HOUSING TO ½ TOTAL ANGULAR MOVEMENT.

Fig. 4.

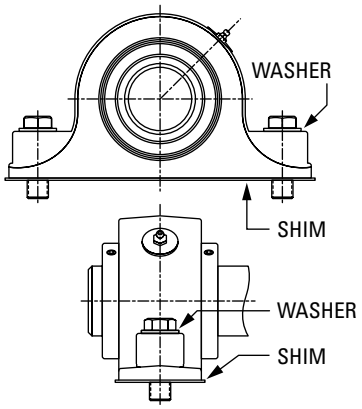

USE WASHERS AND FULL SHIMS.

Fig. 5.

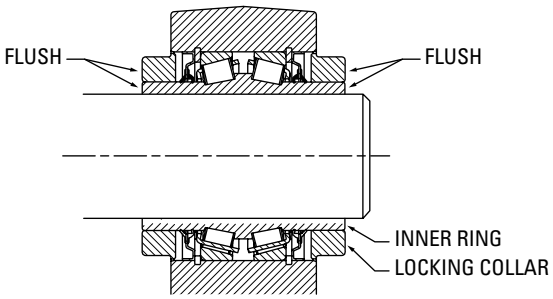

LINE UP COLLAR(S) WITH INNER RING.

Fig. 6.

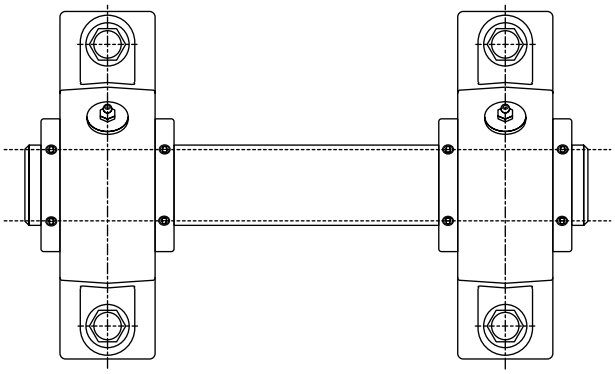

LINE UP SET SCREWS IN MULTIPLE UNITS.

Fig. 7.

TABLE 7.
RECOMMENDED SHAFT TOLERANCE

Shaft Dia.	Tolerance
in. **mm**	in. **mm**
Up thru 1 ½ **35 mm**	+0.0000 to -0.0005 **+0.000 to -0.013**
1 ⅝ thru 4 **40 thru 100 mm**	+0.0000 to -0.0010 **+0.000 to -0.025**
4 7/16 thru 5 **110 thru 125 mm**	+0.0000 to -0.0015 **+0.000 to -0.038**
5 7/16 thru 6 **135 thru 150 mm**	+0.0000 to -0.0015 **+0.000 to -0.038**
6 7/16 thru 7 **170 thru 180 mm**	+0.0000 to -0.0020 **+0.000 to -0.051**

NOTE:

Refer to the Timken Engineering Manual (order no. 10424) for ISO g6, h6 or m6 shaft tolerance data.

TABLE 8.
RECOMMENDED SET SCREW TIGHTENING TORQUE

Shaft Dia.	Set Screw Size	Tightening Torque
in. **mm**	in.	in. - lbs. **N-m**
1 3/16 thru 1 11/16 **35 thru 40 mm**	5/16-18	155 **17.5**
1 ¾ thru 2 ½ **45 thru 65 mm**	⅜-16	275 **31.7**
2 11/16 thru 3 ½ **70 thru 90 mm**	½-13	615 **69.4**
3 15/16 thru 5 **100 thru 125 mm**	⅝-11	1315 **148.6**
5 7/16 thru 6 **135 thru 150 mm**	¾-10	2150 **242.9**
6 7/16 thru 7 **170 thru 180 mm**	⅞-9	5130 **579.6**

TABLE 9.
SUGGESTED RELUBRICATION INTERVALS
(BASED ON EIGHT HOURS/DAY OPERATION)

Environment	Clean: Un-Exposed			Moderate: Exposed			Extreme: Harsh		
Application Speed[1]	Low	Med.	Hi	Low	Med.	Hi	Low	Med.	Hi
Greasing Interval	1 year	2 months	2 weeks	1 month	2 weeks	(2)	1 week	1 week	(2)

[1]Low < 25% max RPM; 25% < Med. < 75%; 75% < Hi – See table 5.
[2]Use extra caution due to heat generation.
Relubrication frequency and quantity are best developed through experience.
At all times, follow Original Equipment Manufacturer's maintenance instructions.

WARNING

Failure to observe the following warnings could create a risk of death or serious injury.

Overheated bearings can ignite explosive atmospheres. Special care must be taken to properly select, install, maintain, and lubricate mounted unit bearings that are used in or near atmospheres that may contain explosive levels of combustible gases or accumulations of dust such from grain, coal, or other combustible materials. Consult your equipment designer or supplier for installation and maintenance instructions.

SELF ALIGNING INSTALLATION AND LUBRICATION

PRODUCT NOTES

1. Self-aligning tapered roller bearing housed units are designed to be installed on the shaft without needing to disassemble the split housing. The unit is ready to install on the shaft out of the box.
2. The bearing is designed for maximum permissible static misalignment of +/-4 degrees. Going in excess of this may result in reduced bearing life.
3. All self-aligning tapered roller bearing housed units come prelubricated with factory grease. There is no need to add grease during installation.

INSTALLATION

1. Proper installation of the housed unit is necessary. This includes the use of shafts that are clean, free from nicks and burrs, straight and of proper diameter. Follow Table 10 for recommended shaft tolerances (those shown in the table are for normal loaded applications). Refer to catalog to verify the maximum allowable slip-fit radial load (Fmax) and to determine if a tighter fit is required. Do not mount the bearing on a worn section of the shaft. The use of shafts with hardness greater than HRC 45 will reduce the effectiveness of the locking collars.
2. If using an open-end cover on the inboard side, slide the open-end cover/seal combination into position on the shaft.
3. Apply a thin oil film to the shaft and bearing bore.
4. Slide the bearing onto the shaft into position starting with the fixed (non-expansion) bearing and then proceeding to the floating (expansion) bearings down the shaft.
   a. It is necessary to make sure that the housed units and shafts are in alignment (Fig. 8). The self-aligning units come with machined foot ends on the base of the housing to assist with alignment. Verify that the mounting surfaces are in the same flat plane to help make sure good alignment is achieved. If shimming is required to minimize misalignment, use full shims across the entire housing base (Fig. 9).
   b. Position expansion (floating) bearing assemblies on the mounting surface, then align and tighten base mounting bolts. Do not tighten the housing cap bolts or locking collar set screws at this time. Housing mounting bolts need to be alternately torqued securely to their mounting supports. Flat washers should be used when installing any kind of housed unit (Fig. 9). Washers should be properly sized to the bolt diameter and should not be an SAE grade less than SAE grade 8 or equivalent.
   c. Position non-expansion (fixed) bearing assemblies in correct relation to the shaft and mounting surface. Tighten base mounting bolts. Do not tighten the housing cap bolts or locking collar set screws at this time. Housing mounting bolts need to be alternately torqued securely to their mounting supports. Flat washers should be used when installing any kind of housed unit (Fig. 9). Washers should be properly sized to the bolt diameter and should not be an SAE grade less than SAE grade 8 or equivalent.
5. Verify the alignment of the fixed (non-expansion) unit. Rotating the bearing by hand without the cap bolts tightened down will help the bearing to accurately align. If it's not possible to rotate by hand - and it's safe to do so - run under power for a short time. Tighten the housing cap bolts to the torque specified in Table 12. Then ensure that the locking collars are lined up flush with the end of the cone (inner ring) face (Fig. 10). Set screws then need to be properly tightened per Table 11 using a cross pattern. Set screws in multiple units should be aligned to each other (Fig. 11).
6. Locate the first float (expansion) unit closest to fixed bearing and begin setting and locking expansion bearings from closest to fixed out. Locate the cartridge of the expansion unit in the center of its axial travel or at extreme if maximum expansion is required (do not preload anti-rotation washer/grease fitting against the access slot in the top of the housing). Verify the alignment of the unit. Rotating the bearing by hand without the cap bolts tightened down will help the bearing to accurately align. If it's not possible to rotate by hand - and it is safe to do so - run the unit for a short time. Tighten the cap bolts to the torque specified in Table12. Then ensure that the locking collars are lined up flush with the end of the cone (inner ring) face (Fig. 10). Set screws then need to be properly tightened per Table 11 using a cross pattern. Set screws in multiple units should be aligned to each other (Fig. 11). Then move to the next float (expansion) bearing in line and repeat step 6.
7. If using covers, complete the inboard cover installation and any outboard cover installations per the installation guide provided with the covers.

TABLE 10.
RECOMMENDED SHAFT TOLERANCE

Shaft Dia.	Tolerance
mm in.	**mm** in.
35 Up thru 1 ½	**+0.000 to -0.013** +0.0000 to -0.0005
40 thru 100 1 ⅝ thru 4	**+0.000 to -0.025** +0.0000 to -0.0010
110 thru 125 4 7/16 thru 5	**+0.000 to -0.038** +0.0000 to -0.0015
135 thru 150 5 7/16 thru 6	**+0.000 to -0.038** +0.0000 to -0.0015
170 thru 180 6 7/16 thru 7	**+0.000 to -0.051** +0.0000 to -0.0020

TABLE 11.
RECOMMENDED SET SCREW TIGHTENING TORQUE

Shaft Dia.	Set Screw Size	Tightening Torque
in. **mm**	in.	in. - lbs. **N-m**
1 3/16 thru 1 11/16 **35 thru 40 mm**	5/16-18	155 **17.5**
1 ¾ thru 2 ½ **45 thru 65 mm**	⅜-16	275 **31.7**
2 11/16 thru 3 ½ **70 thru 90 mm**	½-13	615 **69.4**
3 15/16 thru 5 **100 thru 125 mm**	⅝-11	1315 **148.6**
5 7/16 thru 6 **135 thru 150 mm**	¾-10	2150 **242.9**
6 7/16 thru 7 **170 thru 180 mm**	⅞-9	5130 **579.6**

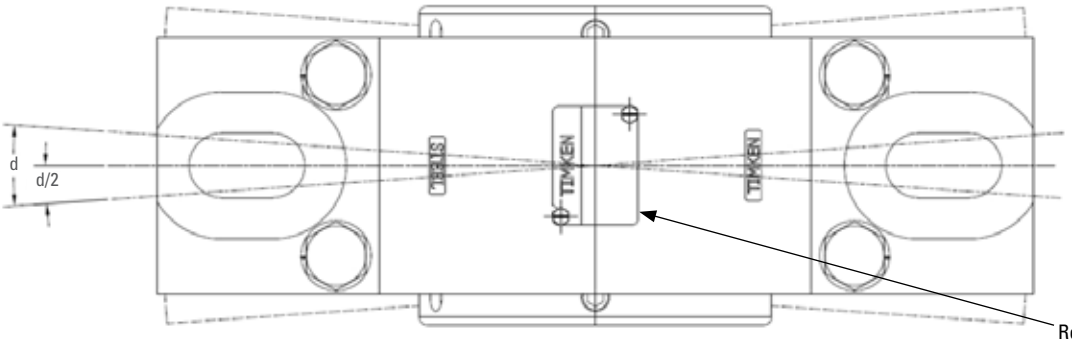

Fig. 8. Align housing to 1/2 total angular movement.

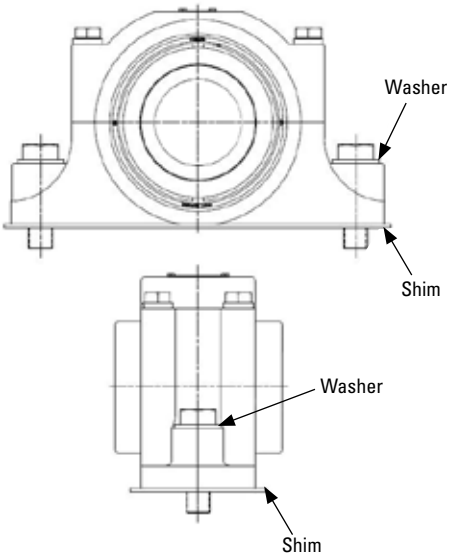

Fig. 9.

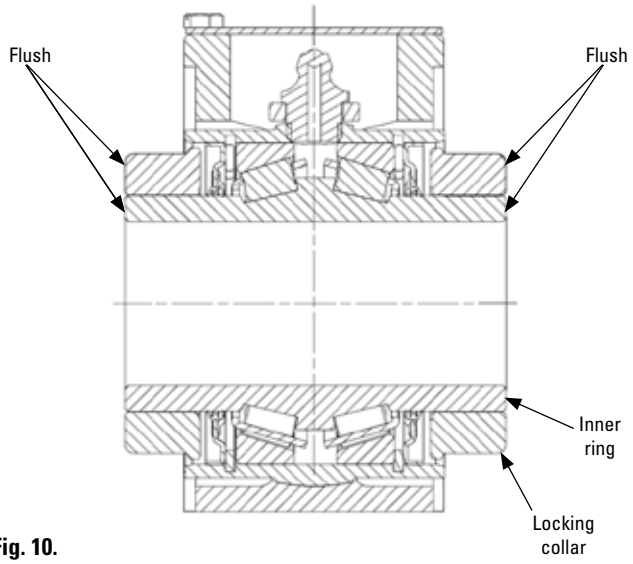

Fig. 10.

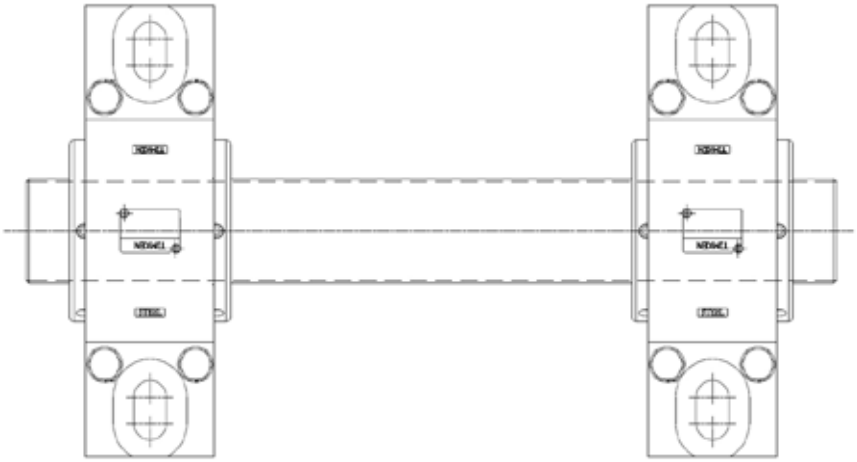

Fig. 11. Line up set screws in multiple units.

REPLACING CARTRIDGE ASSEMBLY IN SELF-ALIGNING HOUSED UNIT ASSEMBLY

1. The self-aligning housings are serialized as matched sets (caps and bases). When reassembling the cap and base, ensure that the serial numbers match.
2. Remove old cartridge bearing assembly. Then clean and inspect the cap and base housing bore for any damage. Installing replacement cartridge assemblies into a damaged housing may result in reduced bearing life.
3. Apply a film of anti-seize compound to the spherical bore of the cap and base of the housing.
4. Insert the cartridge assembly to the bolted base:
   a. For non-expansion (fixed), drop the cartridge assembly into the base with the grease fitting facing towards the top of the housing.
   b. For expansion (float), place the cartridge assembly into the base with the grease fitting facing towards the top of the housing. If the float required is centered, then there will be 6.6 mm (0.26 in.) float available on each side, and the cartridge should be installed at the center of the housing. If the float required is more than 6.6 mm (0.26 in.) toward the one end, the cartridge would be placed in the opposite side with additional expansion from the center of housing.
5. Install the pre-matched cap lining up the dowels with the dowel holes in the base. Then loosely tighten the cap bolts.
6. Then follow the housed unit installation instructions on page 19 for final installation.

TABLE 12. RECOMMENDED CAP BOLT TIGHTENING TORQUE

Shaft Size		Bolt Size (Grade 8)	Tightening Torque
Pillow Block	4 Bolt Flange		
in.	in.	in.	ft. - lbs.
–	1 3/16 - 1 1/4	1/4 UNC	12
1 3/16 - 1 1/4	1 1/2 - 1 11/16	5/16 UNC	25
1 3/8 - 1 11/16	1 3/8 - 1 7/16, 1 3/4 - 2	3/8 UNC	44
1 3/4 - 2 3/16	2 3/16 - 2 1/2	7/16 UNC	70
2 1/4 - 3	2 11/16 - 3	1/2 UNC	107
3 3/16 - 4	3 3/16 - 4 1/2	5/8 UNC	212
4 7/16 - 5	–	3/4 UNC	376
5 7/16 - 7	–	1 UNC	772

Shaft Size		Bolt Size (Class 10.9)	Tightening Torque
Pillow Block	4 Bolt Flange		
mm	mm	mm	Nm
35 - 40	35 - 50	M10 x 1.5	61
45 - 55	55 - 65	M12 x 1.75	107
60 - 75	70 - 75	M14 x 2	171
80 - 100	80 - 115	M16 x 2	266
110 - 125	–	M20 x 2.5	518
135 - 180	–	M24 x 3	895

LUBRICATION

This information is to aid in the proper lubrication of Timken tapered roller bearing housed units for the majority of applications.

Bearings have been factory prelubricated with Timken® Premium All Purpose Industrial Grease, which is an NLGI No. 2 lithium complex based grease. This is suitable for normal operating conditions. Units should be relubricated with the Timken grease or one that is compatible and made for roller bearings. **It is vital that the greases used are compatible. Please consult with a Timken representative for the grease specifications if the use of a grease other than the Timken grease mentioned above is needed.**

Normal service is considered as operation in a clean, dry environment at temperatures between -34° C to +82° C (-30° F and +180° F). If service is beyond normal conditions due to speed, temperature, or exposure to moisture, dirt or corrosive chemicals, periodic relubrication may be advisable. For extreme conditions or conditions in which special chemicals are used, a Timken representative should be consulted.

After extended storage or periods when the unit is not in operation, fresh grease should be added.

For units operating in dirty or wet environments, the bearing should contain as much grease as possible, based on the shaft speed, to help protect against contamination. For slower applications, with shaft speeds typically less than 200 RPM, the unit should have grease added at start-up to fill the bearing.

Lubrication affects the bearing operating temperature as well. If the bearing does not have enough grease, this could lead to higher temperature operation due to inadequate lubrication film thickness. Excessive grease will lead to higher operating temperatures due to grease churning. This can cause bearing overheating. To avoid this, it may be necessary to remove some of the grease inside the unit. The grease fitting may be removed briefly in this circumstance to allow excess grease to purge (the grease fitting must be replaced). It is best to observe the bearing and its temperature and adjust the lubrication as needed.

RELUBRICATION

Grease fitting for relubrication is located under the part number tag (Fig. 8).

Adequate lubrication is an essential element to the bearing life. Table 13, shown below, can be used as a suggested initial point of reference. Relubrication frequency and quantity intervals are best developed through experience for each application, based on types of service, which may differ from the suggestions in the table. When the bearing is not in operation for an extended period of time, grease should be added to prevent corrosion.

The recommended shaft tolerances in Table 10, shown on page 20, are for normal loaded applications. Please refer to the engineering section in the Timken Tapered Roller Bearing Housed Unit Catalog (Order no. 10481) to verify the maximum allowable slip fit radial load and to determine if a tighter fit is required. Table 13 shows general lubrication suggested starting points only. Please read the entire installation instructions prior to using these tables. Applications should be regularly reviewed and lubrication amounts and intervals modified as needed to assure best results.

TABLE 13. SUGGESTED RELUBRICATION INTERVALS (BASED ON 8 HOURS/DAY OPERATION)

	Environment								
	Clean: Un-Exposed			Moderate: Exposed			Extreme: Harsh		
Application Speed[1]	Low	Med	High	Low	Med	High	Low	Med	High
Greasing Interval	1 year	2 months	2 weeks	1 month	2 weeks	(2)	1 week	1 week	(2)

[1] (Low< 25% max. RPM; 25%<Med<75%; 75%<High).
[2] Use extra caution due to heat generation.
Relubrication frequency and quantity are best developed through experience. And at all times, follow the Original Equipment Manufacturer's maintenance instructions.

TYPE E MOUNTED TAPERED ROLLER BEARING PRODUCT DATA TABLES

The following tables include product specification information for Timken Type E mounted bearings. Contact your Timken engineer for more information.

Nomenclature 24

Pillow Block: Two-Bolt Base 26

- Single Locking Collar 26
- Double Locking Collar 27

Pillow Block: Four-Bolt Base 28

- Single Locking Collar 28
- Double Locking Collar 29

Flange: Four-Bolt 30

- Single Locking Collar 30
- Double Locking Collar 31

Flange: Piloted 32

- Single Locking Collar 32
- Double Locking Collar 33

Take-Up: Wide Slot 34

- Single Locking Collar 34
- Double Locking Collar 35

Take-Up: Top Angle 36

- Single Locking Collar 36
- Double Locking Collar 37

Type E End Covers 38

NOMENCLATURE

DOUBLE LOCKING COLLAR NOMENCLATURE

E - P2B - TRB - 2 15/16

Housing Options:
E Type E dimensions

Rolling Element:
TRB Tapered roller bearing

Housing Construction Options:

P2B	Pillow block: two-bolt, cast iron
P4B	Pillow block: four-bolt, cast iron
4BF	Flange: four-bolt, cast iron
PF	Flange: piloted, cast iron
TU	Take-up: wide slot, cast iron
TTU	Take-up: top angle, cast iron

Bore Code:		Bore Size:
1 3/16	–	1 3/16 in.
2 15/16	–	2 15/16 in.
5	–	5 in.
35MM	–	35 mm
120MM	–	120 mm

SINGLE LOCKING COLLAR NOMENCLATURE

E - P2BA - TRB - 2 15/16

Housing Options:
E Type E dimensions

A Single locking collar

Housing Construction Options:

P2B	Pillow block: two-bolt, cast iron
P4B	Pillow block: four-bolt, cast iron
4BF	Flange: four-bolt, cast iron
PF	Flange: piloted, cast iron
TU	Take-up: wide slot, cast iron
TTU	Take-up: top angle, cast iron

Rolling Element:
TRB Tapered roller bearing

Bore Code:		Bore Size:
1 3/16	–	1 3/16 in.
2 15/16	–	2 15/16 in.
5	–	5 in.
35MM	–	35 mm
120MM	–	120 mm

Fig. 12. Type E mounted tapered secondary sealing system nomenclature.

Open End Cover Nomenclature.

E U DR - 2 15/16

Housing Options:
E Type E dimensions

End Cover Material:
U Urethane

End Cover Type:
DR Open End Cover with DR seal

Bore Code:		Bore Size:
1 3/16	–	1 3/16 in.
2 15/16	–	2 15/16 in.
5	–	5 in.
35MM	–	35 mm
120MM	–	120 mm

Closed End Cover Nomenclature.

E U C - F

Housing Options:
E Type E dimensions

End Cover Material:
U Urethane

End Cover Type:
DR Open End Cover with DR seal

Housing End Cover Series:
A thru K *
**See end cover product tables on page 38*
Example:
F 2 1/4 in. - 2 7/16 in. (60 mm - 65 mm)

Fig. 13. Type E end cover nomenclatures.

PILLOW BLOCK: TWO-BOLT BASE SINGLE LOCKING COLLAR

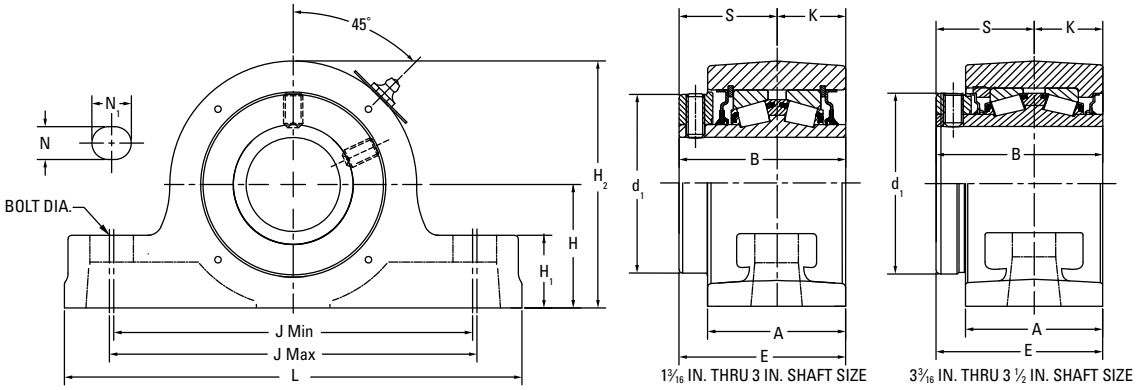

Shaft Dia.	Part No.	B	L	A	J Max.	J Min.	Bolt Dia.	E	N	N_1	H_1	H_2	d_1	H	S	R	Approx. Wt.
in. **mm**		in.	in.	in.	in.	in.	in.	in.	in.	in.	in.	in.	in.	in.	in.	in.	lbs.
1 3/16	E-P2BA-TRB-1 3/16	2 3/8	6	1 7/8	4 13/16	4 3/4	1/2	2 5/16	9/16	19/32	7/8	3	2 1/4	1 1/2	1 3/8	1	4
1 1/4	E-P2BA-TRB-1 1/4																
1 3/8	E-P2BA-TRB-1 3/8	2 17/32	7 3/8	2 1/8	5 7/8	5 5/8	1/2	2 19/32	5/8	3/4	1 1/8	3 3/4	2 3/4	1 7/8	1 1/2	1 1/32	7
1 7/16	E-P2BA-TRB-1 7/16																
35 mm	E-P2BA-TRB-35MM																
1 1/2	E-P2BA-TRB-1 1/2	2 27/32	7 7/8	2 3/8	6 3/8	6 1/8	1/2	2 7/8	5/8	3/4	1 1/4	4 1/4	3 3/16	2 1/8	1 11/16	1 5/32	10
1 5/8	E-P2BA-TRB-1 5/8																
1 11/16	E-P2BA-TRB-1 11/16																
40 mm	E-P2BA-TRB-40MM																
1 3/4	E-P2BA-TRB-1 3/4	2 61/64	8 7/8	2 1/2	7 1/8	6 7/8	5/8	3 1/64	3/4	7/8	1 15/16	4 1/2	3 7/16	2 1/4	1 3/4	1 13/64	12
1 7/8	E-P2BA-TRB-1 7/8																
1 15/16	E-P2BA-TRB-1 15/16																
2	E-P2BA-TRB-2																
45 mm	E-P2BA-TRB-45MM																
50 mm	E-P2BA-TRB-50MM																
2 3/16	E-P2BA-TRB-2 3/16	3 1/8	9 5/8	2 5/8	7 7/8	7 5/8	5/8	3 3/16	3/4	7/8	1 1/2	5	3 3/4	2 1/2	1 7/8	1 29/64	15
55 mm	E-P2BA-TRB-55MM																
2 1/4	E-P2BA-TRB-2 1/4	3 5/16	10 1/2	2 7/8	8 5/8	8 3/8	5/8	3 7/16	3/4	7/8	1 5/8	5 23/32	4 1/16	2 3/4	2	1 5/16	23
2 7/16	E-P2BA-TRB-2 7/16																
2 1/2	E-P2BA-TRB-2 1/2																
60 mm	E-P2BA-TRB-60MM																
65 mm	E-P2BA-TRB-65MM																
2 11/16	E-P2BA-TRB-2 11/16	3 11/16	12	3	9 11/16	9 5/16	3/4	3 29/32	27/32	1	1 7/8	6 1/4	4 23/32	3 1/8	2 1/4	1 7/16	28
2 3/4	E-P2BA-TRB-2 3/4																
2 15/16	E-P2BA-TRB-2 15/16																
3	E-P2BA-TRB-3																
70 mm	E-P2BA-TRB-70MM																
75 mm	E-P2BA-TRB-75MM																
3 3/16	E-P2BA-TRB-3 3/16	4 3/16	14	3 1/2	11 13/16	10 13/16	7/8	4 3/8	1	1 13/16	2 1/4	7 1/2	5 17/32	3 3/4	2 1/2	1 11/16	48
3 1/4	E-P2BA-TRB-3 1/4																
3 7/16	E-P2BA-TRB-3 7/16																
3 1/2	E-P2BA-TRB-3 1/2																
80 mm	E-P2BA-TRB-80MM																
85 mm	E-P2BA-TRB-85MM																
90 mm	E-P2BA-TRB-90MM																

See page 38 for end cover selection.

PILLOW BLOCK: TWO-BOLT BASE DOUBLE LOCKING COLLAR

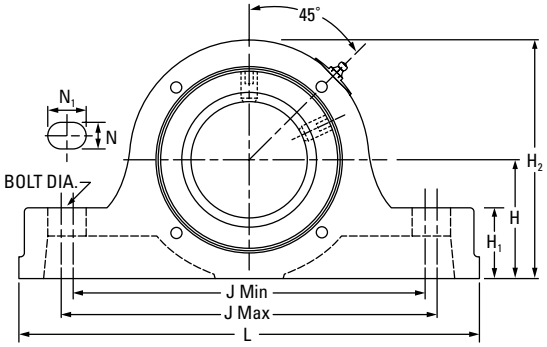

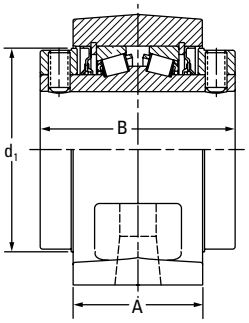

1 3/16 IN. THRU 3 IN. SHAFT SIZE

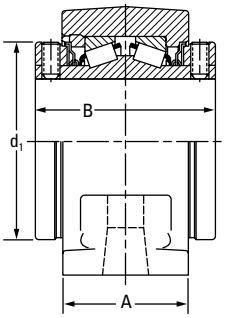

3 3/16 IN. THRU 3 1/2 IN. SHAFT SIZE

Shaft Dia.	Part No.	B	L	A	J Max.	J Min.	Bolt Dia.	N	N_1	H_1	H_2	d_1	H	Approx. Wt.
in. **mm**		in.	in.	in.	in.	in.	in.	in.	in.	in.	in.	in.	in.	lbs.
1 3/16	E-P2B-TRB-1 3/16	2 3/4	6	1 7/8	4 13/16	4 3/4	1/2	9/16	19/32	7/8	3	2 1/4	1 1/2	4
1 1/4	E-P2B-TRB-1 1/4													
1 3/8	E-P2B-TRB-1 3/8	3	7 3/8	2 1/8	5 7/8	5 5/8	1/2	5/8	3/4	1 1/8	3 3/4	2 3/4	1 7/8	7
1 7/16	E-P2B-TRB-1 7/16													
35 mm	E-P2B-TRB-35MM													
1 1/2	E-P2B-TRB-1 1/2	3 3/8	7 7/8	2 3/8	6 3/8	6 1/8	1/2	5/8	3/4	1 1/4	4 1/4	3 3/16	2 1/8	10
1 5/8	E-P2B-TRB-1 5/8													
1 11/16	E-P2B-TRB-1 11/16													
40 mm	E-P2B-TRB-40MM													
1 3/4	E-P2B-TRB-1 3/4	3 1/2	8 7/8	2 1/2	7 1/8	6 7/8	5/8	3/4	7/8	1 15/16	4 1/2	3 7/16	2 1/4	12
1 7/8	E-P2B-TRB-1 7/8													
1 15/16	E-P2B-TRB-1 15/16													
2	E-P2B-TRB-2													
45 mm	E-P2B-TRB-45MM													
50 mm	E-P2B-TRB-50MM													
2 3/16	E-P2B-TRB-2 3/16	3 3/4	9 5/8	2 5/8	7 7/8	7 5/8	5/8	3/4	7/8	1 1/2	5	3 3/4	2 1/2	15
55 mm	E-P2B-TRB-55MM													
2 1/4	E-P2B-TRB-2 1/4	4	10 1/2	2 7/8	8 5/8	8 3/8	5/8	3/4	7/8	1 5/8	5 23/32	4 1/16	2 3/4	23
2 7/16	E-P2B-TRB-2 7/16													
2 1/2	E-P2B-TRB-2 1/2													
60 mm	E-P2B-TRB-60MM													
65 mm	E-P2B-TRB-65MM													
2 11/16	E-P2B-TRB-2 11/16	4 1/2	12	3	9 11/16	9 5/16	3/4	27/32	1	1 7/8	6 1/4	4 23/32	3 1/8	28
2 3/4	E-P2B-TRB-2 3/4													
2 15/16	E-P2B-TRB-2 15/16													
3	E-P2B-TRB-3													
70 mm	E-P2B-TRB-70MM													
75 mm	E-P2B-TRB-75MM													
3 3/16	E-P2B-TRB-3 3/16	5	13 3/4	3 1/2	11 3/4	10 1/8	7/8	1	1 13/16	2 1/4	7 1/2	5 17/32	3 3/4	47
3 1/4	E-P2B-TRB-3 1/4													
3 7/16	E-P2B-TRB-3 7/16													
3 1/2	E-P2B-TRB-3 1/2													
80 mm	E-P2B-TRB-80MM													
85 mm	E-P2B-TRB-85MM													
90 mm	E-P2B-TRB-90MM													

See page 38 for end cover selection.

PILLOW BLOCK: FOUR-BOLT BASE SINGLE LOCKING COLLAR

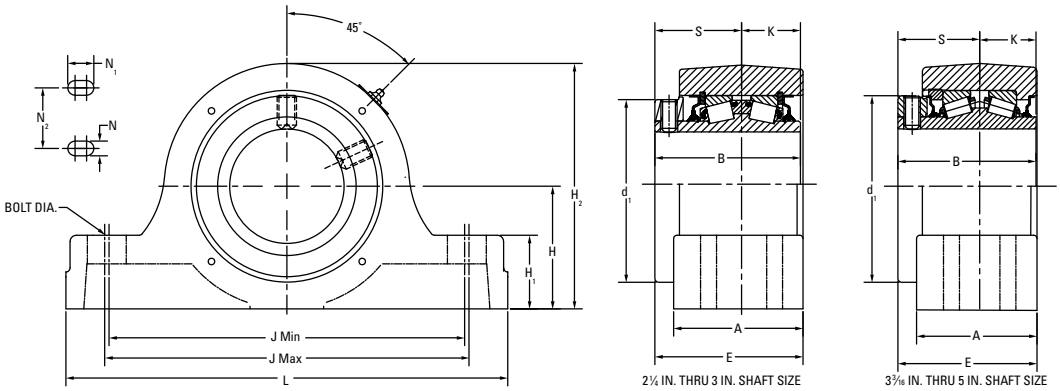

Shaft Dia.	Part No.	B	L	A	J Max.	J Min.	Bolt Dia.	E	N	N_1	N_2	H_1	H_2	d_1	H	S	R	Approx. Wt.
in. **mm**		in.	in.	in.	in.	in.	in.	in.	in.	in.	in.	in.	in.	in.	in.	in.	in.	lbs.
2 1/4	E-P4BA-TRB-2 1/4	3 5/16	10 1/2	3 1/2	8 11/16	8 5/16	5/8	3 7/16	11/16	7/8	1 7/8	1 5/8	5 23/32	4 1/16	2 3/4	2	1 5/16	22
2 7/16	E-P4BA-TRB-2 7/16																	
2 1/2	E-P4BA-TRB-2 1/2																	
60 mm	E-P4BA-TRB-60MM																	
65 mm	E-P4BA-TRB-65MM																	
2 11/16	E-P4BA-TRB-2 11/16	3 11/16	12	4	9 13/16	9 3/16	5/8	3 29/32	11/16	1	2 1/8	1 7/8	6 1/4	4 23/32	3 1/8	2 1/4	1 7/16	30
2 3/4	E-P4BA-TRB-2 3/4																	
2 15/16	E-P4BA-TRB-2 15/16																	
3	E-P4BA-TRB-3																	
70 mm	E-P4BA-TRB-70MM																	
75 mm	E-P4BA-TRB-75MM																	
3 3/16	E-P4BA-TRB-3 3/16	4 3/16	13 1/2	4 1/2	11 1/4	10 3/4	3/4	4 3/8	15/16	1 3/16	2 3/8	2 1/4	7 1/2	5 17/32	3 3/4	2 1/2	1 11/16	47
3 1/4	E-P4BA-TRB-3 1/4																	
3 7/16	E-P4BA-TRB-3 7/16																	
3 1/2	E-P4BA-TRB-3 1/2																	
80 mm	E-P4BA-TRB-80MM																	
85 mm	E-P4BA-TRB-85MM																	
90 mm	E-P4BA-TRB-90MM																	
3 15/16	E-P4BA-TRB-3 15/16	5 1/4	15 1/4	4 1/2	12 3/4	12 1/4	3/4	5 1/2	7/8	1 1/8	2 1/4	2 7/16	8 1/2	6 1/16	4 1/4	3 1/8	2 1/8	72
4	E-P4BA-TRB-4																	
100 mm	E-P4BA-TRB-100MM																	
4 7/16	E-P4BA-TRB-4 7/16	5 5/8	16 5/8	4 5/8	13 11/16	13 5/16	3/4	6 1/32	15/16	1 1/8	2 1/2	2 3/4	9 3/8	6 47/64	4 3/4	3 3/8	2 1/4	92
4 1/2	E-P4BA-TRB-4 1/2																	
110 mm	E-P4BA-TRB-110MM																	
115 mm	E-P4BA-TRB-115MM																	
4 15/16	E-P4BA-TRB-4 15/16	6 7/32	18 1/2	5 1/8	15 3/4	15 1/4	7/8	6 29/64	1	1 1/4	2 7/8	3	10 7/8	7 3/4	5 1/2	3 5/8	2 19/32	134
5	E-P4BA-TRB-5																	
125 mm	E-P4BA-TRB-125MM																	

PILLOW BLOCK: FOUR-BOLT BASE DOUBLE LOCKING COLLAR

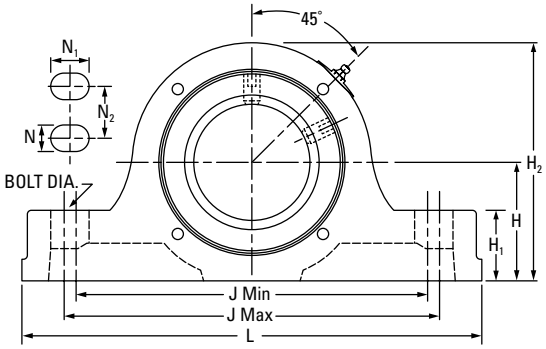

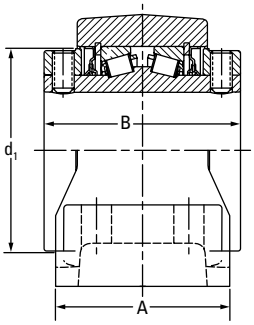

2¼ IN. THRU 3 IN. SHAFT SIZE

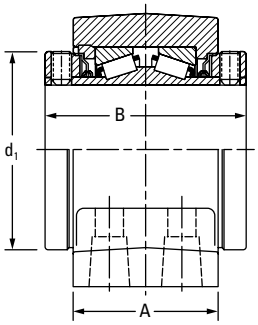

3³⁄₁₆ IN. THRU 5 IN. SHAFT SIZE

Shaft Dia.	Part No.	B	L	A	J Max.	J Min.	Bolt Dia.	N	N_1	N_2	H_1	H_2	d_1	H	Approx. Wt.
in. / **mm**		in.	in.	in.	in.	in.	in.	in.	in.	in.	in.	in.	in.	in.	lbs.
2 ¼	E-P4B-TRB-2 ¼														22
2 7⁄16	E-P4B-TRB-2 7⁄16														22
2 ½	E-P4B-TRB-2 ½	4	10 ½	3 ½	8 11⁄16	8 5⁄16	⅝	11⁄16	⅞	1 ⅞	1 ⅝	5 23⁄32	4 1⁄16	2 ¾	21
60 mm	E-P4B-TRB-60MM														22
65 mm	E-P4B-TRB-65MM														21
2 11⁄16	E-P4B-TRB-2 11⁄16														30
2 ¾	E-P4B-TRB-2 ¾														29
2 15⁄16	E-P4B-TRB-2 15⁄16	4 ½	12	4	9 13⁄16	9 3⁄16	⅝	11⁄16	1	2 ⅛	1 ⅞	6 ¼	4 23⁄32	3 ⅛	28
3	E-P4B-TRB-3														
70 mm	E-P4B-TRB-70MM														29
75 mm	E-P4B-TRB-75MM														28
3 3⁄16	E-P4B-TRB-3 3⁄16														47
3 ¼	E-P4B-TRB-3 ¼														46
3 7⁄16	E-P4B-TRB-3 7⁄16														45
3 ½	E-P4B-TRB-3 ½	5	13 ½	4 ½	11 ¼	10 ¾	¾	15⁄16	1 3⁄16	2 ⅜	2 ¼	7 ½	5 17⁄32	3 ¾	44
80 mm	E-P4B-TRB-80MM														47
85 mm	E-P4B-TRB-85MM														45
90 mm	E-P4B-TRB-90MM														44
3 15⁄16	E-P4B-TRB-3 15⁄16														72
4	E-P4B-TRB-4	6 ¼	15 ¼	4 ½	12 ¾	12 ¼	¾	⅞	1 ⅛	2 ¼	2 7⁄16	8 ½	6 1⁄16	4 ¼	71
100 mm	E-P4B-TRB-100MM														71
4 7⁄16	E-P4B-TRB-4 7⁄16														91
4 ½	E-P4B-TRB-4 ½	6 ¾	16 ⅝	4 ⅝	13 11⁄16	13 5⁄16	¾	15⁄16	1 ⅛	2 ½	2 ¾	9 ⅜	6 47⁄64	4 ¾	90
110 mm	E-P4B-TRB-110MM														92
115 mm	E-P4B-TRB-115MM														89
4 15⁄16	E-P4B-TRB-4 15⁄16														134
5	E-P4B-TRB-5	7 ¼	18 ½	5 ⅛	15 ¾	15 ¼	⅞	1	1 ¼	2 ⅞	3	10 ⅞	7 ¾	5 ½	133
125 mm	E-P4B-TRB-125MM														134
135 mm	E-P4B-TRB-135MM														
5 7⁄16	E-P4B-TRB-5 7⁄16														
5 ½	E-P4B-TRB-5 ½														
140 mm	E-P4B-TRB-140MM	9	22	6 ¼	19 ⅛	17 ⅜	1	1 ⅛	2	3 ¾	3 ¼	13 3⁄16	9 ⅜	6 11⁄16	247
150 mm	E-P4B-TRB-150MM														
5 15⁄16	E-P4B-TRB-5 15⁄16														
6	E-P4B-TRB-6														
6 7⁄16	E-P4B-TRB-6 7⁄16														
6 ½	E-P4B-TRB-6 ½														
170 mm	E-P4B-TRB-170MM	10 ½	26	7 ⅛	23 ¼	21 ¼	1	1 ⅛	2	4 ⅝	3 11⁄16	15 ⅛	11 7⁄16	7 ½	434
6 15⁄16	E-P4B-TRB-6 15⁄16														
7	E-P4B-TRB-7														
180 mm	E-P4B-TRB-180MM														

FLANGE: FOUR-BOLT SINGLE LOCKING COLLAR

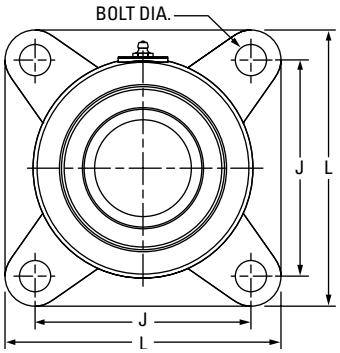

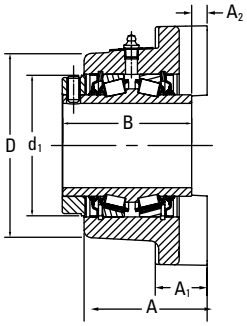

1 3/16 IN. THRU 3 IN. SHAFT SIZE

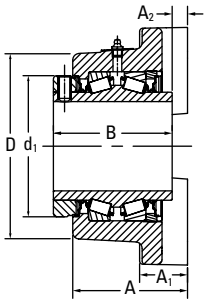

3 3/16 IN. THRU 4 1/2 IN. SHAFT SIZE

Shaft Dia.	Part No.	B	L	A	J	A_2	Bolt Dia.	A_1	D	d_1	Approx. Wt.
in. **mm**		in.	in.	in.	in.	in.	in.	in.	in.	in.	lbs.
1 3/16	E-4BFA-TRB-1 3/16	2 3/8	3 3/4	2 11/32	2 7/8	7/16	3/8	1	2 15/16	2 1/4	4
1 1/4	E-4BFA-TRB-1 1/4										
1 3/8	E-4BFA-TRB-1 3/8	2 17/32	4 5/8	2 19/32	3 1/2	17/32	1/2	1 1/16	3 1/2	2 3/4	7
1 7/16	E-4BFA-TRB-1 7/16										
35 mm	E-4BFA-TRB-35MM										
1 1/2	E-4BFA-TRB-1 1/2	2 27/32	5 3/8	2 31/32	4 1/8	21/32	1/2	1 3/16	4 3/16	3 3/16	11
1 5/8	E-4BFA-TRB-1 5/8										
1 11/16	E-4BFA-TRB-1 11/16										
40 mm	E-4BFA-TRB-40MM										
1 3/4	E-4BFA-TRB-1 3/4	2 61/64	5 5/8	3 3/32	4 3/8	43/64	1/2	1 3/16	4 7/16	3 7/16	12
1 7/8	E-4BFA-TRB-1 7/8										
1 15/16	E-4BFA-TRB-1 15/16										
2	E-4BFA-TRB-2										
45 mm	E-4BFA-TRB-45MM										
50 mm	E-4BFA-TRB-50MM										
2 3/16	E-4BFA-TRB-2 3/16	3 1/8	6 1/4	3 9/32	4 7/8	3/8	5/8	1 3/8	4 7/8	3 3/4	16
55 mm	E-4BFA-TRB-55MM										
2 1/4	E-4BFA-TRB-2 1/4	3 5/16	6 7/8	3 9/16	5 3/8	1 1/16	5/8	1 1/2	5 5/16	4 1/16	21
2 7/16	E-4BFA-TRB-2 7/16										
2 1/2	E-4BFA-TRB-2 1/2										
60 mm	E-4BFA-TRB-60MM										
65 mm	E-4BFA-TRB-65MM										
2 11/16	E-4BFA-TRB-2 11/16	3 11/16	7 3/4	3 15/16	6	1	3/4	1 5/8	6	4 23/32	29
2 3/4	E-4BFA-TRB-2 3/4										
2 15/16	E-4BFA-TRB-2 15/16										
3	E-4BFA-TRB-3										
70 mm	E-4BFA-TRB-70MM										
75 mm	E-4BFA-TRB-75MM										
3 3/16	E-4BFA-TRB-3 3/16	4 3/16	9 1/4	4 1/2	7	1 1/16	3/4	1 7/8	7 1/4	5 17/32	52
3 1/4	E-4BFA-TRB-3 1/4										
3 7/16	E-4BFA-TRB-3 7/16										
3 1/2	E-4BFA-TRB-3 1/2										
80 mm	E-4BFA-TRB-80MM										
85 mm	E-4BFA-TRB-85MM										
90 mm	E-4BFA-TRB-90MM										
3 15/16	E-4BFA-TRB-3 15/16	5 1/4	10 1/4	5 5/8	7 3/4	1 1/4	7/8	2 1/8	8 1/4	6 1/16	76
4	E-4BFA-TRB-4										
100 mm	E-4BFA-TRB-100MM										
4 7/16	E-4BFA-TRB-4 7/16	5 5/8	10 7/8	5 15/16	8 3/4	1 1/2	7/8	2 7/16	8 3/4	6 47/64	90
4 1/2	E-4BFA-TRB-4 1/2										
110 mm	E-4BFA-TRB-110MM										
115 mm	E-4BFA-TRB-115MM										

FLANGE: FOUR-BOLT DOUBLE LOCKING COLLAR

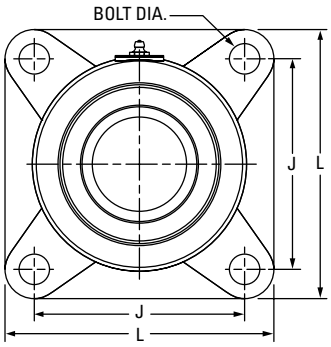

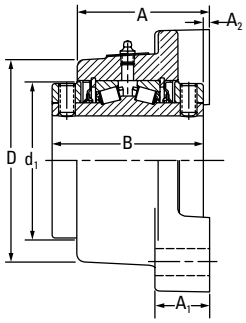

1 3/16 IN. THRU 3 IN. SHAFT SIZE

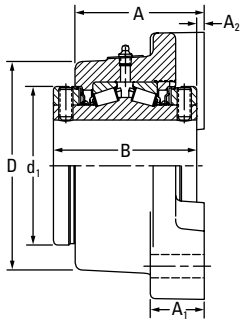

3 3/16 IN. THRU 4 1/2 IN. SHAFT SIZE

Shaft Dia.	Part No.	B	L	A	J	A_2	Bolt Dia.	A_1	D	d_1	Approx. Wt.
in. **mm**		in.	in.	in.	in.	in.	in.	in.	in.	in.	lbs.
1 3/16	E-4BF-TRB-1 3/16	2 3/4	3 3/4	2 11/32	2 7/8	1/16	3/8	1	2 15/16	2 1/4	4
1 1/4	E-4BF-TRB-1 1/4										
1 3/8	E-4BF-TRB-1 3/8	3	4 5/8	2 19/32	3 1/2	1/16	1/2	1 1/16	3 1/2	2 3/4	7
1 7/16	E-4BF-TRB-1 7/16										
35 mm	E-4BF-TRB-35MM										
1 1/2	E-4BF-TRB-1 1/2	3 3/8	5 3/8	2 31/32	4 1/8	1/8	1/2	1 3/16	4 3/16	3 3/16	11
1 5/8	E-4BF-TRB-1 5/8										
1 11/16	E-4BF-TRB-1 11/16										
40 mm	E-4BF-TRB-40MM										
1 3/4	E-4BF-TRB-1 3/4	3 1/2	5 5/8	3 3/32	4 3/8	1/8	1/2	1 3/16	4 7/16	3 7/16	12
1 7/8	E-4BF-TRB-1 7/8										
1 15/16	E-4BF-TRB-1 15/16										
2	E-4BF-TRB-2										
45 mm	E-4BF-TRB-45MM										
50 mm	E-4BF-TRB-50MM										
2 3/16	E-4BF-TRB-2 3/16	3 3/4	6 1/4	3 9/32	4 7/8	1/8	5/8	1 3/8	4 7/8	3 3/4	16
55 mm	E-4BF-TRB-55MM										
2 1/4	E-4BF-TRB-2 1/4	4	6 7/8	3 9/16	5 3/8	3/16	5/8	1 1/2	5 5/16	4 1/16	21
2 7/16	E-4BF-TRB-2 7/16										21
2 1/2	E-4BF-TRB-2 1/2										20
60 mm	E-4BF-TRB-60MM										21
65 mm	E-4BF-TRB-65MM										20
2 11/16	E-4BF-TRB-2 11/16	4 1/2	7 3/4	3 15/16	6	3/16	3/4	1 5/8	6	4 23/32	29
2 3/4	E-4BF-TRB-2 3/4										29
2 15/16	E-4BF-TRB-2 15/16										28
3	E-4BF-TRB-3										28
70 mm	E-4BF-TRB-70MM										29
75 mm	E-4BF-TRB-75MM										28
3 3/16	E-4BF-TRB-3 3/16	5	9 1/4	4 1/2	7	1/4	3/4	1 7/8	7 1/4	5 17/32	52
3 1/4	E-4BF-TRB-3 1/4										51
3 7/16	E-4BF-TRB-3 7/16										49
3 1/2	E-4BF-TRB-3 1/2										49
80 mm	E-4BF-TRB-80MM										52
85 mm	E-4BF-TRB-85MM										50
90 mm	E-4BF-TRB-90MM										49
3 15/16	E-4BF-TRB-3 15/16	6 1/4	10 1/4	5 5/8	7 3/4	1/4	7/8	2 1/8	8 1/4	6 1/16	76
4	E-4BF-TRB-4										75
100 mm	E-4BF-TRB-100MM										76
4 7/16	E-4BF-TRB-4 7/16	6 3/4	10 7/8	5 15/16	8 3/4	3/8	7/8	2 7/16	8 3/4	6 47/64	89
4 1/2	E-4BF-TRB-4 1/2										88
110 mm	E-4BF-TRB-110MM										90
115 mm	E-4BF-TRB-115MM										87

FLANGE: PILOTED SINGLE LOCKING COLLAR

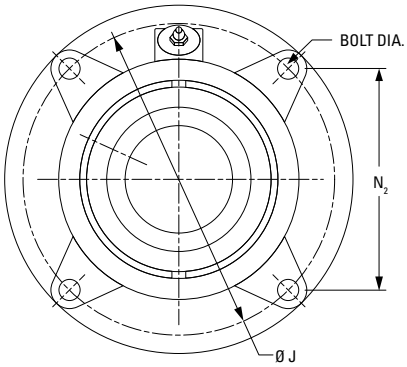

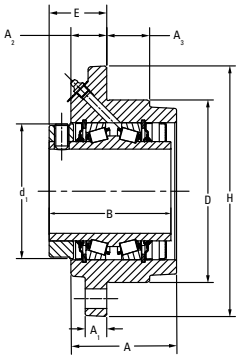

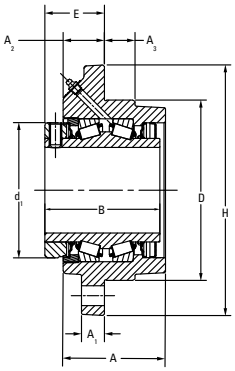

Shaft Dia.	Part No.	B	H	A	N_2	J	A_3	Bolt Dia.	E	A_1	D	d_1	A_2	Approx. Wt.
in. **mm**		in.	in.	in.	in.	in.	in.	in.	in.	in.	in.	in.	in.	lbs.
1 3/16	E-PFA-TRB-1 3/16	2 3/4	5	2 7/32	2 9/64	4 1/8	3/4	3/8	1 5/16	7/16	3 3/8	2 1/4	27/32	5
1 1/4	E-PFA-TRB-1 1/4													
1 3/8	E-PFA-TRB-1 3/8	3	5 1/4	2 15/32	3 3/32	4 3/8	7/8	3/8	1 1/2	1/2	3 5/8	2 3/4	1 1/32	6
1 7/16	E-PFA-TRB-1 7/16													
35 mm	E-PFA-TRB-35MM													
1 1/2	E-PFA-TRB-1 1/2	3 3/8	6 1/8	2 25/32	3 5/8	5 1/8	1 1/16	7/16	1 9/16	1/2	4 1/4	3 3/16	1 1/32	9
1 5/8	E-PFA-TRB-1 5/8													
1 11/16	E-PFA-TRB-1 11/16													
40 mm	E-PFA-TRB-40MM													
1 3/4	E-PFA-TRB-1 3/4	3 1/2	6 3/8	2 29/32	3 51/64	5 3/8	1 3/16	7/16	1 9/16	9/16	4 1/2	3 7/16	1 1/32	10
1 7/8	E-PFA-TRB-1 7/8													
1 15/16	E-PFA-TRB-1 15/16													
2	E-PFA-TRB-2													
45 mm	E-PFA-TRB-45MM													
50 mm	E-PFA-TRB-50MM													
2 3/16	E-PFA-TRB-2 3/16	3 3/4	7 1/8	3 3/32	4 15/64	6	1 3/16	1/2	1 11/16	9/16	5	3 3/4	1 3/32	13
55 mm	E-PFA-TRB-55MM													
2 1/4	E-PFA-TRB-2 1/4	4	7 5/8	3 5/16	4 19/32	6 1/2	1 5/16	1/2	1 13/16	5/8	5 1/2	4 1/16	1 3/16	17
2 7/16	E-PFA-TRB-2 7/16													
2 1/2	E-PFA-TRB-2 1/2													
60 mm	E-PFA-TRB-60MM													
65 mm	E-PFA-TRB-65MM													
2 11/16	E-PFA-TRB-2 11/16	4 1/2	8 3/4	3 11/16	5 19/64	7 1/2	1 1/2	5/8	2	3/4	6 3/8	4 23/32	1 1/4	26
2 3/4	E-PFA-TRB-2 3/4													
2 15/16	E-PFA-TRB-2 15/16													
3	E-PFA-TRB-3													
70 mm	E-PFA-TRB-70MM													
75 mm	E-PFA-TRB-75MM													
3 3/16	E-PFA-TRB-3 3/16	5	10 1/4	4 3/16	6 3/32	8 5/8	1 1/4	3/4	2 7/16	15/16	7 3/8	5 17/32	1 11/16	43
3 1/4	E-PFA-TRB-3 1/4													
3 7/16	E-PFA-TRB-3 7/16													
3 1/2	E-PFA-TRB-3 1/2													
80 mm	E-PFA-TRB-80MM													
85 mm	E-PFA-TRB-85MM													
90 mm	E-PFA-TRB-90MM													
3 15/16	E-PFA-TRB-3 15/16	5 1/4	10 7/8	4 1/2	6 5/8	9 3/8	1 1/2	3/4	2 11/16	1	8 1/8	6 1/16	1 13/16	58
4	E-PFA-TRB-4													
100 mm	E-PFA-TRB-100MM													
4 7/16	E-PFA-TRB-4 7/16	5 5/8	13 1/2	4 5/8	5 7/8	11 3/4	1 1/2	3/4	3	1	10 1/4	6 47/64	1 15/16	93
4 1/2	E-PFA-TRB-4 1/2													
110 mm	E-PFA-TRB-110MM													
115 mm	E-PFA-TRB-115MM													
4 15/16	E-PFA-TRB-4 15/16	6 7/32	14 3/4	5 1/16	6 3/8	12 3/4	1 3/4	7/8	2 31/32	1 1/4	11	7 3/4	1 7/8	126
5	E-PFA-TRB-5													
125 mm	E-PFA-TRB-125MM													

FLANGE: PILOTED DOUBLE LOCKING COLLAR

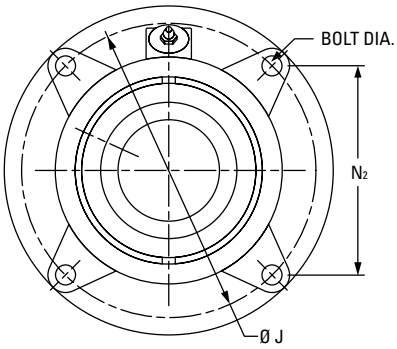

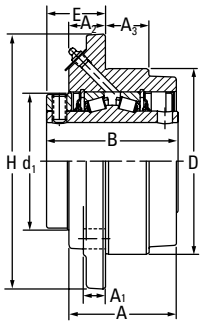

1 3/16 IN. THRU 3 IN. SHAFT SIZE

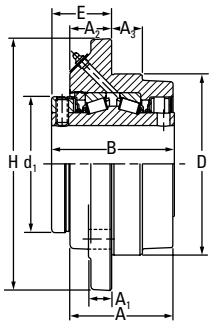

3 3/16 IN. THRU 3 1/2 IN. SHAFT SIZE

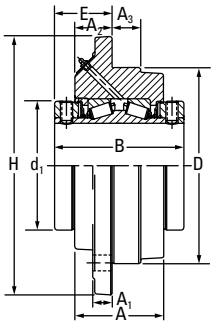

3 15/16 IN. THRU 5 IN. SHAFT SIZE

Shaft Dia.	Part No.	B	H	A	N_2	J	A_3	Bolt Dia.	E	A_1	D[1]	d_1	A_2	Approx. Wt.
in. / **mm**		in.	in.	in.	in.	in.	in.	in.	in.	in.	in.	in.	in.	lbs.
1 3/16	E-PF-TRB-1 3/16	2 3/4	5	2 7/32	2.92	4 1/8	3/4	3/8	1 5/16	7/16	3 3/8	2 1/4	27/32	5
1 1/4	E-PF-TRB-1 1/4													
1 3/8	E-PF-TRB-1 3/8	3	5 1/4	2 15/32	3.09	4 3/8	7/8	3/8	1 1/2	1/2	3 5/8	2 3/4	1 1/32	6
1 7/16	E-PF-TRB-1 7/16													
35 mm	E-PF-TRB-35MM													
1 1/2	E-PF-TRB-1 1/2	3 3/8	6 1/8	2 25/32	3.62	5 1/8	1 1/16	7/16	1 9/16	1/2	4 1/4	3 3/16	1 1/32	9
1 5/8	E-PF-TRB-1 5/8													
1 11/16	E-PF-TRB-1 11/16													
40 mm	E-PF-TRB-40MM													
1 3/4	E-PF-TRB-1 3/4	3 1/2	6 3/8	2 29/32	3.80	5 3/8	1 3/16	7/16	1 9/16	9/16	4 1/2	3 7/16	1 1/32	10
1 7/8	E-PF-TRB-1 7/8													
1 15/16	E-PF-TRB-1 15/16													
2	E-PF-TRB-2													
45 mm	E-PF-TRB-45MM													
50 mm	E-PF-TRB-50MM													
2 3/16	E-PF-TRB-2 3/16	3 3/4	7 1/8	3 3/32	4.24	6	1 3/16	1/2	1 11/16	9/16	5	3 3/4	1 3/32	13
55 mm	E-PF-TRB-55MM													
2 1/4	E-PF-TRB-2 1/4	4	7 5/8	3 5/16	4.60	6 1/2	1 5/16	1/2	1 13/16	5/8	5 1/2	4 1/16	1 3/16	17
2 7/16	E-PF-TRB-2 7/16													17
2 1/2	E-PF-TRB-2 1/2													16
60 mm	E-PF-TRB-60MM													17
65 mm	E-PF-TRB-65MM													16
2 11/16	E-PF-TRB-2 11/16	4 1/2	8 3/4	3 11/16	5.30	7 1/2	1 1/2	5/8	2	3/4	6 3/8	4 23/32	1 1/4	26
2 3/4	E-PF-TRB-2 3/4													26
2 15/16	E-PF-TRB-2 15/16													
3	E-PF-TRB-3													25
70 mm	E-PF-TRB-70MM													26
75 mm	E-PF-TRB-75MM													25
3 3/16	E-PF-TRB-3 3/16	5	10 1/4	4 3/16	6.10	8 5/8	1 1/4	3/4	2 7/16	15/16	7 3/8	5 17/32	1 11/16	43
3 1/4	E-PF-TRB-3 1/4													43
3 7/16	E-PF-TRB-3 7/16													42
3 1/2	E-PF-TRB-3 1/2													41
80 mm	E-PF-TRB-80MM													44
85 mm	E-PF-TRB-85MM													42
90 mm	E-PF-TRB-90MM													41
3 15/16	E-PF-TRB-3 15/16	6 1/4	10 7/8	4 1/2	6.63	9 3/8	1 1/2	3/4	2 11/16	1	8 1/8	6 1/16	1 13/16	58
4	E-PF-TRB-4													57
100 mm	E-PF-TRB-100MM													58
4 7/16	E-PF-TRB-4 7/16	6 3/4	13 1/2	4 5/8	5 7/8[2]	11 3/4	1 1/2	3/4[2]	3	1	10 1/4	6 47/64	1 15/16	92
4 1/2	E-PF-TRB-4 1/2													91
110 mm	E-PF-TRB-110MM													93
115 mm	E-PF-TRB-115MM													90
4 15/16	E-PF-TRB-4 15/16	7 1/4	14 3/4	5 1/16	6 3/8[2]	12 3/4	1 3/4	7/8[2]	2 31/32	1 1/4	11	7 3/4	1 7/8	125
5	E-PF-TRB-5													124
125 mm	E-PF-TRB-125MM													126

[1] +0.000 in./ -0.002 in.
[2] Six holes equally spaced (chordal spacing shown).
Note: 1 3/16 to 3 1/2 utilize one collar; 3 15/16 to 5 utilize two collars.

TAKE-UP: WIDE SLOT SINGLE LOCKING COLLAR

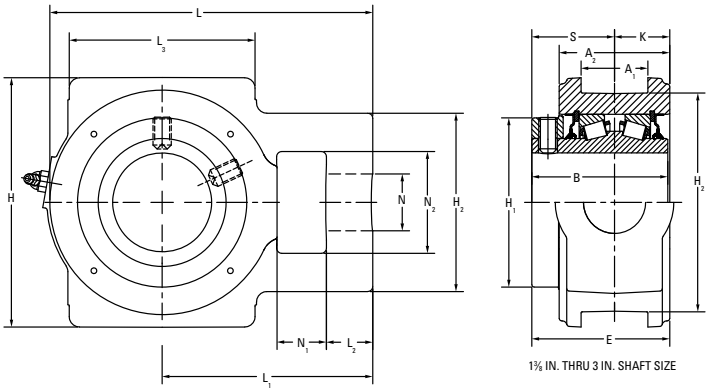

Shaft Dia.	Part No.	B	L	A_1	L_3	L_1	N	L_2	N_1	H_2	N_2	d_1	H_1	H	A_2	E	S	R	Approx. Wt.
in. **mm**		in.	in.	in.	in.	in.	in.	in.	in.	in.	in.	in.	in.	in.	in.	in.	in.	in.	lbs.
1 3/8	E-TUA-TRB-1 3/8																		
1 7/16	E-TUA-TRB-1 7/16	2 17/32	5 3/32	17/32	2 3/4	3 7/32	7/8	11/16	5/8	2 7/16	1 7/16	2 3/4	3 1/2	4 1/8	2 1/16	2 17/32	1 1/2	1 1/32	7
35 mm	E-TUA-TRB-35MM																		
1 1/2	E-TUA-TRB-1 1/2																		
1 5/8	E-TUA-TRB-1 5/8																		
1 11/16	E-TUA-TRB-1 11/16	2 27/32	6	11/16	3 1/4	3 13/16	1 1/8	15/16	3/4	3 5/16	1 15/16	3 3/16	4	4 3/4	2 5/16	2 27/32	1 11/16	1 5/32	12
40 mm	E-TUA-TRB-40MM																		
1 3/4	E-TUA-TRB-1 3/4																		
1 7/8	E-TUA-TRB-1 7/8																		
1 15/16	E-TUA-TRB-1 15/16																		
2	E-TUA-TRB-2	2 61/64	6 5/16	11/16	3 3/4	3 5/16	1 1/8	15/16	3/4	3 5/16	1 15/16	3 7/16	4	4 3/4	2 7/16	2 31/32	1 3/4	1 13/64	13
45 mm	E-TUA-TRB-45MM																		
50 mm	E-TUA-TRB-50MM																		
2 3/16	E-TUA-TRB-2 3/16	3 1/8	7 1/8	13/16	3 3/4	4 5/8	1 1/4	1	1 1/4	3 7/8	2 1/4	3 3/4	4 1/2	5 1/4	2 9/16	3 1/16	1 7/8	1 2/9	16
55 mm	E-TUA-TRB-55MM																		
2 1/4	E-TUA-TRB-2 1/4																		
2 7/16	E-TUA-TRB-2 7/16																		
2 1/2	E-TUA-TRB-2 1/2	3 5/16	7 13/16	1 1/16	4 1/2	5 1/16	1 3/8	1 1/16	1 1/4	4 5/16	2 1/2	4 1/16	5 1/8	6	2 3/4	3 3/8	2	1 5/16	21
60 mm	E-TUA-TRB-60MM																		
65 mm	E-TUA-TRB-65MM																		
2 11/16	E-TUA-TRB-2 11/16																		
2 3/4	E-TUA-TRB-2 3/4																		
2 15/16	E-TUA-TRB-2 15/16																		
3	E-TUA-TRB-3	3 11/16	9 3/16	1 13/16	4 3/4	5 7/8	1 11/16	1 1/8	1 1/2	4 15/16	2 3/4	4 23/32	5 15/16	6 3/4	3	4	2 1/4	1 7/16	30
70 mm	E-TUA-TRB-70MM																		
75 mm	E-TUA-TRB-75MM																		

TAKE-UP: WIDE SLOT DOUBLE LOCKING COLLAR

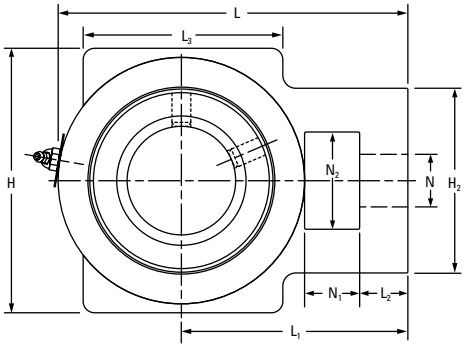

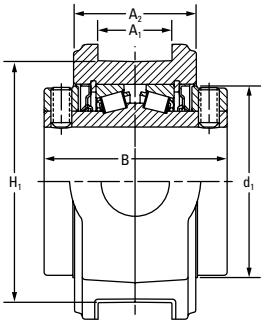

1⅜ IN. THRU 3 IN. SHAFT SIZE

Shaft Dia.	Part No.	B	L	A_1	L_3	L_1	N	L_2	N_1	H_2	N_2	d_1	H_1	H	A_2	Approx. Wt.
in. **mm**		in.	in.	in.	in.	in.	in.	in.	in.	in.	in.	in.	in.	in.	in.	lbs.
1 3/8	E-TU-TRB-1 3/8															
1 7/16	E-TU-TRB-1 7/16	3	5 3/32	17/32	2 3/4	3 7/32	7/8	11/16	5/8	2 7/16	1 7/16	2 3/4	3 1/2	4 1/8	2 1/16	7
35 mm	E-TU-TRB-35MM															
1 1/2	E-TU-TRB-1 1/2															12
1 5/8	E-TU-TRB-1 5/8	3 3/8	6	11/16	3 1/4	3 13/16	1 1/8	15/16	3/4	3 5/16	1 15/16	3 3/16	4	4 3/4	2 5/16	11
1 11/16	E-TU-TRB-1 11/16															11
40 mm	E-TU-TRB-40MM															11
1 3/4	E-TU-TRB-1 3/4															
1 7/8	E-TU-TRB-1 7/8															
1 15/16	E-TU-TRB-1 15/16															
2	E-TU-TRB-2	3 1/2	6 5/16	11/16	3 3/4	3 5/16	1 1/8	15/16	3/4	3 5/16	1 15/16	3 7/16	4	4 3/4	2 7/16	13
45 mm	E-TU-TRB-45MM															
50 mm	E-TU-TRB-50MM															
2 3/16	E-TU-TRB-2 3/16	3 3/4	7 1/8	13/16	3 3/4	4 5/8	1 1/4	1	1 1/4	3 7/8	2 1/4	3 3/4	4 1/2	5 1/4	2 9/16	16
55 mm	E-TU-TRB-55MM															
2 1/4	E-TU-TRB-2 1/4															21
2 7/16	E-TU-TRB-2 7/16															20
2 1/2	E-TU-TRB-2 1/2	4	7 13/16	1 1/16	4 1/2	5 1/16	1 3/8	1 1/16	1 1/4	4 5/16	2 1/2	4 1/16	5 1/8	6	2 3/4	20
60 mm	E-TU-TRB-60MM															21
65 mm	E-TU-TRB-65MM															20
2 11/16	E-TU-TRB-2 11/16															30
2 3/4	E-TU-TRB-2 3/4															30
2 15/16	E-TU-TRB-2 15/16															29
3	E-TU-TRB-3	4 1/2	9 3/16	1 13/16	4 3/4	5 7/8	1 11/16	1 1/8	1 1/2	4 15/16	2 3/4	4 23/32	5 15/16	6 3/4	3	28
70 mm	E-TU-TRB-70MM															30
75 mm	E-TU-TRB-75MM															29

TAKE-UP: TOP ANGLE SINGLE LOCKING COLLAR

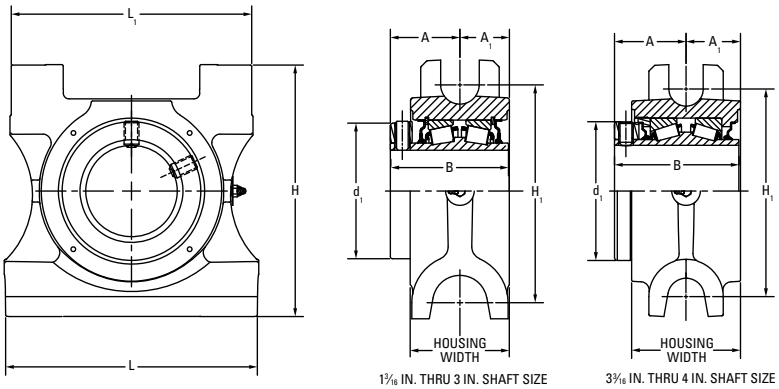

Shaft Dia.	Part No.	B	H_1	H	d_1	A	A_1	Housing Width	L	L_1	Approx. Wt.
in. **mm**		in.	in.	in.	in.	in.	in.	in.	in.	in.	lbs.
1 3/4	E-TTUA-TRB-1 3/4	2 61/64	5 3/16	6 3/8	3 7/16	1 3/4	1 13/64	2 9/16	6 1/2	6	14
1 7/8	E-TTUA-TRB-1 7/8										
1 15/16	E-TTUA-TRB-1 15/16										
2	E-TTUA-TRB-2										
45 mm	E-TTUA-TRB-45MM										
50 mm	E-TTUA-TRB-50MM										
2 3/16	E-TTUA-TRB-2 3/16	3 1/8	5 13/16	6 7/8	3 3/4	1 7/8	1 1/4	2 9/16	6 3/4	7	17
55 mm	E-TTUA-TRB-55MM										
2 1/4	E-TTUA-TRB-2 1/4	3 5/16	6 1/4	7 7/16	4 1/16	2	1 5/16	3	7 1/2	7	22
2 7/16	E-TTUA-TRB-2 7/16										
2 1/2	E-TTUA-TRB-2 1/2										
60 mm	E-TTUA-TRB-60MM										
65 mm	E-TTUA-TRB-65MM										
2 11/16	E-TTUA-TRB-2 11/16	3 11/16	7 3/16	8 5/16	4 23/32	2 1/4	1 7/16	3	8 1/2	8	30
2 3/4	E-TTUA-TRB-2 3/4										
2 15/16	E-TTUA-TRB-2 15/16										
3	E-TTUA-TRB-3										
70 mm	E-TTUA-TRB-70MM										
75 mm	E-TTUA-TRB-75MM										
3 3/16	E-TTUA-TRB-3 3/16	4 3/16	8 5/16	9 5/8	5 17/32	2 1/2	1 11/16	3 3/4	9 1/2	9	46
3 1/4	E-TTUA-TRB-3 1/4										
3 7/16	E-TTUA-TRB-3 7/16										
3 1/2	E-TTUA-TRB-3 1/2										
80 mm	E-TTUA-TRB-80MM										
85 mm	E-TTUA-TRB-85MM										
90 mm	E-TTUA-TRB-90MM										
3 15/16	E-TTUA-TRB-3 15/16	5 1/4	9 1/16	11	6 1/16	3 1/8	2 1/8	4 3/4	11	10 1/2	70
4	E-TTUA-TRB-4										
100 mm	E-TTUA-TRB-100MM										

TAKE-UP: TOP ANGLE DOUBLE LOCKING COLLAR

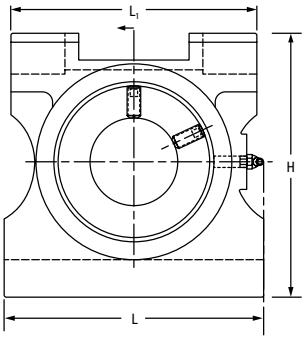

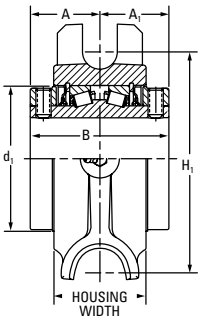

1 3/16 IN. THRU 3 IN. SHAFT SIZE

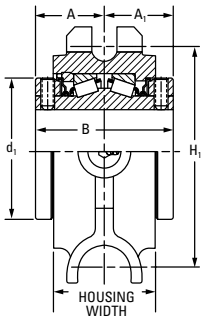

3 3/16 IN. THRU 4 IN. SHAFT SIZE

Shaft Dia.	Part No.	B	H_1	H	d_1	A	A_1	Housing Width	L	L_1	Approx. Wt.
in. **mm**		in.	in.	in.	in.	in.	in.	in.	in.	in.	lbs.
1 3/4	E-TTU-TRB-1 3/4	3 1/2	5 3/16	6 3/8	3 7/16	1 3/4	1 3/4	2 9/16	6 1/2	6	14
1 7/8	E-TTU-TRB-1 7/8										
1 15/16	E-TTU-TRB-1 15/16										
2	E-TTU-TRB-2										
45 mm	E-TTU-TRB-45MM										
50 mm	E-TTU-TRB-50MM										
2 3/16	E-TTU-TRB-2 3/16	3 3/4	5 13/16	6 7/8	3 3/4	1 7/8	1 7/8	2 9/16	6 3/4	7	17
55 mm	E-TTU-TRB-55MM										
2 1/4	E-TTU-TRB-2 1/4	4	6 1/4	7 7/16	4 1/16	2	2	3	7 1/2	7	22
2 7/16	E-TTU-TRB-2 7/16										21
2 1/2	E-TTU-TRB-2 1/2										21
60 mm	E-TTU-TRB-60MM										22
65 mm	E-TTU-TRB-65MM										21
2 11/16	E-TTU-TRB-2 11/16	4 1/2	7 3/16	8 5/16	4 23/32	2 1/4	2 1/4	3	8 1/2	8	30
2 3/4	E-TTU-TRB-2 3/4										29
2 15/16	E-TTU-TRB-2 15/16										28
3	E-TTU-TRB-3										28
70 mm	E-TTU-TRB-70MM										29
75 mm	E-TTU-TRB-75MM										28
3 3/16	E-TTU-TRB-3 3/16	5	8 5/16	9 5/8	5 17/32	2 1/2	2 1/2	3 3/4	9 1/2	9	46
3 1/4	E-TTU-TRB-3 1/4										46
3 7/16	E-TTU-TRB-3 7/16										44
3 1/2	E-TTU-TRB-3 1/2										44
80 mm	E-TTU-TRB-80MM										46
85 mm	E-TTU-TRB-85MM										45
90 mm	E-TTU-TRB-90MM										43
3 15/16	E-TTU-TRB-3 15/16	6 1/4	9 1/16	11	6 1/16	3 1/8	3 1/8	4 3/4	11	10 1/2	70
4	E-TTU-TRB-4										70
100 mm	E-TTU-TRB-100MM										70

TYPE E END COVERS

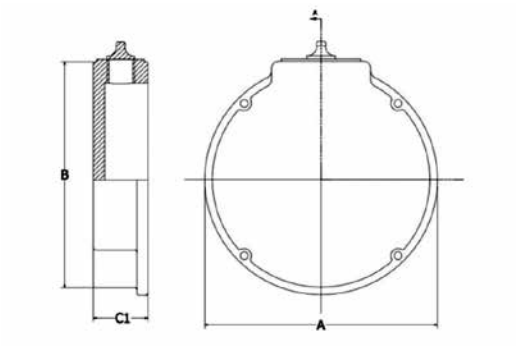

CLOSED END COVER

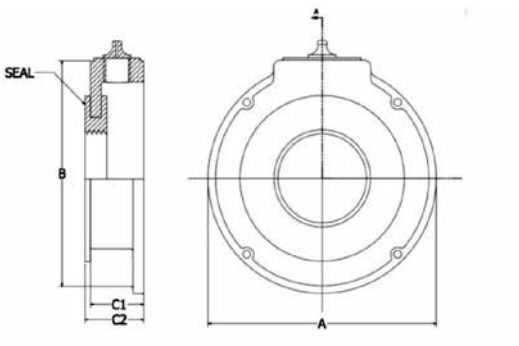

OPEN END COVER

Shaft Size	Open End Cover	A	B	C1	C2	Closed Cover
in. **mm**	in. **mm**	in.	in.	in.	in.	
1 3⁄16, 1 1⁄4	EUDR-1 3⁄16 to EUDR-1 1⁄4	2.85	–	1.00	1.10	EUC-A
1 3⁄8, 1 7⁄16 **35 mm**	EUDR-1 3⁄8 to EUDR-1 7⁄16 EUDR-35MM	3.35	–	1.00	1.10	EUC-B
1 1⁄2, 1 5⁄8, 1 11⁄16 **40 mm**	EUDR-1 1⁄2 to EUDR-1 11⁄16 EUDR-40MM	3.95	3.69	0.98	1.08	EUC-C
1 3⁄4, 1 7⁄8, 1 15⁄16, 2 **45 mm, 50 mm**	EUDR-1 3⁄4 to EUDR-2 EUDR-45MM to EUDR-50MM	4.20	3.94	0.98	1.08	EUC-D
2 3⁄16 **55 mm**	EUDR-2 3⁄16 EUDR-55MM	4.70	4.35	1.08	1.18	EUC-E
2 1⁄4, 2 1⁄2, 2 7⁄16 **60 mm, 65 mm**	EUDR-2 1⁄4 to EUDR-2 7⁄16 EUDR-60MM to EUDR-65MM	4.95	4.57	1.08	1.18	EUC-F
2 11⁄16, 2 3⁄4, 2 15⁄16, 3 **70 mm, 75 mm**	EUDR-2 11⁄16 to EUDR-3 EUDR-70MM to EUDR-75MM	5.65	5.22	1.20	1.30	EUC-G
3 3⁄16, 3 1⁄4, 3 7⁄16, 3 1⁄2 **80 mm, 85 mm, 90 mm**	EUDR-3 3⁄16 to EUDR-3 1⁄2 EUDR-80MM to EUDR-90MM	6.70	6.19	1.20	1.30	EUC-H
3 15⁄16, 4 **100 mm**	EUDR-3 15⁄16 TO EUDR-4 EUDR-100MM	7.43	6.89	1.33	1.43	EUC-I
4 7⁄16, 4 1⁄2 **110 mm, 115 mm**	EUDR-4 7⁄16 to EUDR-4 1⁄2 EUDR-110MM to EUDR-115MM	8.25	7.70	1.64	1.74	EUC-J
4 15⁄16, 5 **125 mm**	EUDR-4 15⁄16 to EUDR-5 EUDR-125MM	10.35	9.70	1.54	1.64	EUC-K
5 7⁄16, 5 1⁄2, 5 15⁄16, 6 **135 mm, 140 mm, 150 mm**	EUDR-5 7⁄16 TO EUDR-6 EUDR-135MM TO EUDR-150MM	11.50	11.50	1.55	1.75	EUC-L
6 7⁄16, 6 1⁄2, 6 15⁄16, 7 **170 mm, 180 mm**	EUDR-6 7⁄16 TO EUDR-7 EUDR-170MM TO EUDR-180MM	13.50	13.50	2.10	1.90	EUC-M

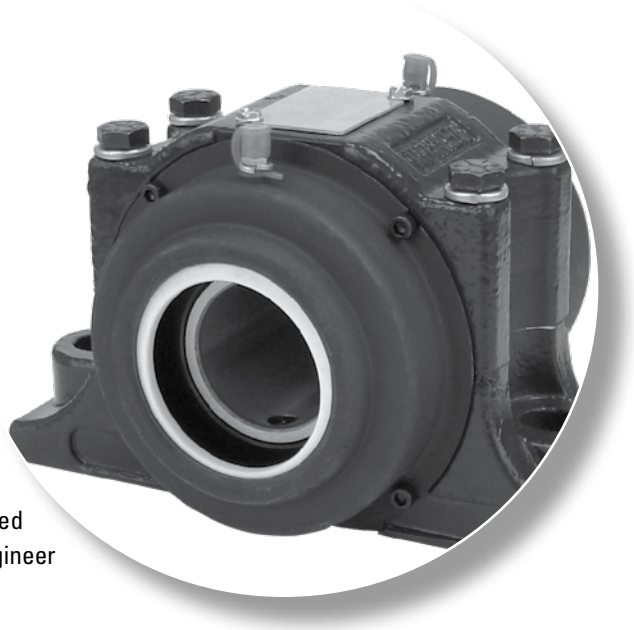

SELF-ALIGNING MOUNTED TAPERED ROLLER BEARING PRODUCT DATA TABLES

The following tables include product specification information for Timken® Self-Aligning Mounted Tapered Roller Bearings. Contact your Timken engineer for more information.

Nomenclature 40

Type E Self-Aligning (ESA) Mounted Tapered Roller Bearing Pillow Block: Two-Bolt Base 42
- Single Locking Collar 42
- Double Locking Collar 43

Type E Self-Aligning (ESA) Mounted Tapered Roller Bearing Pillow Block: Four-Bolt Base 44
- Single Locking Collar 44
- Double Locking Collar 45

Type E Self-Aligning (ESA) Mounted Tapered Roller Bearing: Four-Bolt Flange Block 46
- Single Locking Collar 46
- Double Locking Collar 48

Self-Aligning SAF (SAFSA) Mounted Tapered Roller Bearing Pillow Block: Two-Bolt Base 50
- Single Locking Collar 50
- Double Locking Collar 52

Self-Aligning SAF (SAFSA) Mounted Tapered Roller Bearing Pillow Block: Four-Bolt Base 54
- Single Locking Collar 54
- Double Locking Collar 56

Self-Aligning DI (DISA) Mounted Tapered Roller Bearing Pillow Block: Two-Bolt Base 58
- Double Locking Collar 58

Self-Aligning DI (DISA) Mounted Tapered Roller Bearing Pillow Block: Four-Bolt Base 60
- Double Locking Collar 60

Self-Aligning Type K (KSA) Mounted Tapered Roller Bearing Pillow Block: Two-Bolt Base 62
- Single Locking Collar 62

Self-Aligning Type K (KSA) Mounted Tapered Roller Bearing Pillow Block: Four-Bolt Base 64
- Single Locking Collar 64

Self-Aligning SN (SNSA) Mounted Tapered Roller Bearing Pillow Block: Two-Bolt Base 66
- Double Locking Collar 66

Self-Aligning SN (SNSA) Mounted Tapered Roller Bearing Pillow Block: Four-Bolt Base 68
- Double Locking Collar 68

Self-Aligning Mounted Tapered Roller Bearing Cartridges 70
- Single Locking Collar 70
- Double Locking Collar 72

Self-Aligning Mounted Tapered Roller Bearing Secondary Covers 74

NOMENCLATURE

SELF-ALIGNING DOUBLE COLLAR MOUNTED TAPERED ROLLER BEARING NOMENCLATURE

ESA - P2B - TRB - 1 3/16 - E

Bearing Style:

ESA	Type E dimensions
DISA	DI dimensions
KSA	Type K dimensions
SAFSA	SAF 500 dimensions
SNSA	SN 500 dimensions

Rolling Element:

TRB	Tapered roller bearing

Bore Code:		**Bore Size:**
1 3/16	–	1 3/16 in.
2 15/16	–	2 15/16 in.
5	–	5 in.
35MM	–	35 mm
125MM	–	125 mm

Housing Construction Options:

P2B	Pillow block: Two-bolt
P4B	Pillow block: Four-bolt
4BF	Range block: Four bolt

Expansion or Non-expansion:

BLANK	(No letter) Non-expansion (fixed)
E	Expansion (floating)

SELF-ALIGNING SINGLE COLLAR MOUNTED TAPERED ROLLER BEARING NOMENCLATURE

ESA - P2BA - TRB - 1 3/16 - E

Bearing Style:

ESA	Type E dimensions
DISA	DI dimensions
KSA	Type K dimensions
SAFSA	SAF 500 dimensions
SNSA	SN 500 dimensions

A	Single locking collar

Rolling Element:

TRB	Tapered roller bearing

Bore Code:		**Bore Size:**
1 3/16	–	1 3/16 in.
2 15/16	–	2 15/16 in.
5	–	5 in.
35MM	–	35 mm
125MM	–	125 mm

Housing Construction Options:

P2B	Pillow block: Two-bolt
P4B	Pillow block: Four-bolt
4BF	Range block: Four bolt

Expansion or Non-expansion:

BLANK	(No letter) Non-expansion (fixed)
E	Expansion (floating)

Fig. 14. Self-Aligning Mounted Tapered Roller Bearing nomenclature.

OPEN END COVER NOMENCLATURE

ESA - ST - 1 3/16

Bearing Style:
ESA Self-aligning

Bore Code: / **Bore Size:**
1 3/16 – 1 3/16 in.
5 – 5 in.

Cover Options:
ST Steel Cover - Open

CLOSED END COVER NOMENCLATURE

ESA - SC - A

Bearing Style:
ESA Self-aligning

Series Code:

A	1 3/16 - 1 1/4
B	1 3/8 - 1 7/16 (35 mm)
C	1 1/2 - 1 11/16 (40 mm)
D	1 3/4 - 1 (45-55 mm)
E	1 3/16 (55 mm)
F	1 3/4 - 1 (45-55 mm)
G	2 11/16 - 1 (45-55 mm)
H	1 3/16 - 3 1/2 (80-90 mm)
I	3 15/16 - 4 (100 mm)
J	4 7/16 - 4 1/2 (110-115 mm)
K	4 15/16 - 5 (125 mm)

Cover Options:
SC Steel Cover - Closed

Fig. 15. Self-Aligning Mounted Tapered Roller Bearing nomenclature.

TYPE E SELF-ALIGNING (ESA) MOUNTED TAPERED ROLLER BEARING PILLOW BLOCK: TWO-BOLT BASE SINGLE LOCKING COLLAR

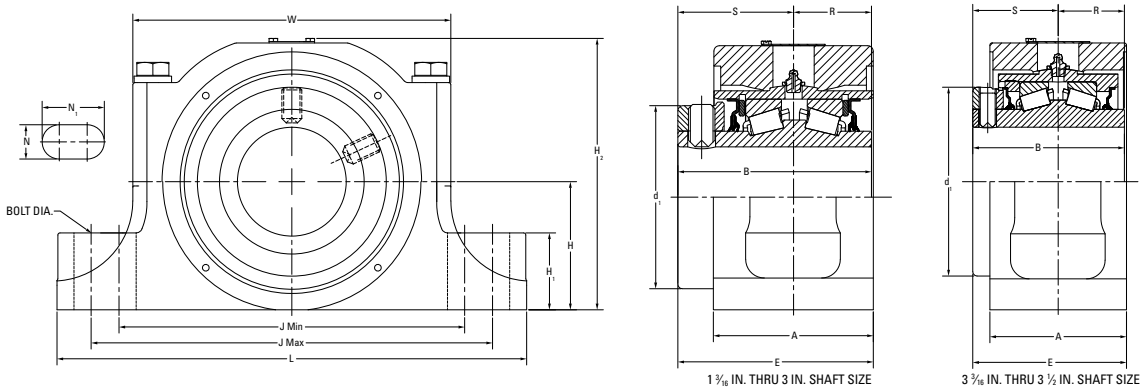

Shaft Dia.	Part No. Non-Expansion	Part No. Expansion	B	L	A	J min	J max	Bolt Dia.	E	N	N_1	H_1	H_2	d_1	H	W	S	R	Expansion	Approx. Wt.
mm in.			**mm** in.	**mm** in.	**mm** in.	**mm** in.	**mm** in.	**mm** in.	**mm** in.	**mm** in.	**mm** in.	**mm** in.	**mm** in.	**mm** in.	**mm** in.	**mm** in.	**mm** in.	**mm** in.	**mm** in.	**kg** lbs.
1 3/16	ESA-P2BA-TRB-1 3/16	ESA-P2BA-TRB-1 3/16E	**60.3**	**158.8**	**47.8**	**115.8**	**125.4**	**12.7**	**58.8**	**14.3**	**19.1**	**22.4**	**91.3**	**57.2**	**37.1**	**103.2**	**34.9**	**25.4**	**14.3**	**2.9**
1 1/4	ESA-P2BA-TRB-1 1/4	ESA-P2BA-TRB-1 1/4E	2 3/8	6 1/4	1 7/8	4 9/16	4 15/16	1/2	2 5/16	9/16	3/4	7/8	3 19/32	2 1/4	1 1/2	4 1/16	1 3/8	1	9/16	6.4
1 3/8	ESA-P2BA-TRB-1 3/8	ESA-P2BA-TRB-1 3/8E	**64.3**	**184.2**	**55.6**	**134.9**	**150.9**	**12.7**	**65.9**	**15.9**	**23.9**	**28.7**	**107.7**	**69.9**	**47.75**	**117.6**	**38.1**	**26.2**	**14.3**	**4.7**
1 7/16	ESA-P2BA-TRB-1 7/16	ESA-P2BA-TRB-1 7/16E	2 17/32	7 1/4	2 3/16	5 5/16	5 15/16	1/2	2 19/32	5/8	15/16	1 1/8	4 3/4	2 3/4	1 7/8	4 5/8	1 1/2	1 1/32	9/16	10.3
35 mm	ESA-P2BA-TRB-35MM	ESA-P2BA-TRB-35MME																		
1 1/2	ESA-P2BA-TRB-1 1/2	ESA-P2BA-TRB-1 1/2E																		
1 5/8	ESA-P2BA-TRB-1 5/8	ESA-P2BA-TRB-1 5/8E	**72.2**	**196.9**	**60.2**	**141.2**	**163.6**	**12.7**	**73.0**	**16.0**	**27.2**	**31.8**	**118.3**	**80.9**	**54.1**	**130.3**	**4.29**	**29.3**	**14.3**	**6.0**
1 11/16	ESA-P2BA-TRB-1 11/16	ESA-P2BA-TRB-1 11/16E	2 27/32	7 3/4	2 3/8	5 9/16	6 7/16	1/2	2 7/8	5/8	1 5/64	1 1/4	4 21/32	3 3/16	2 1/8	5 1/8	1 11/16	1 5/32	9/16	13.3
40 mm	ESA-P2BA-TRB-40MM	ESA-P2BA-TRB-40MME																		
1 3/4	ESA-P2BA-TRB-1 3/4	ESA-P2BA-TRB-1 3/4E																		
1 7/8	ESA-P2BA-TRB-1 7/8	ESA-P2BA-TRB-1 7/8E																		
1 15/16	ESA-P2BA-TRB-1 15/16	ESA-P2BA-TRB-1 15/16E	**75.0**	**225.6**	**64.5**	**160.3**	**182.6**	**15.9**	**76.7**	**19.1**	**30.2**	**33.3**	**126.2**	**87.1**	**57.2**	**141.2**	**44.5**	**30.5**	**14.3**	**7.4**
2	ESA-P2BA-TRB-2	ESA-P2BA-TRB-2E	2 61/64	8 7/8	2 35/64	6 5/16	7 3/16	5/8	3 1/64	3/4	1 3/16	1 5/16	4 31/32	3 7/16	2 1/4	5 9/16	1 3/4	1 13/64	9/16	16.4
45 mm	ESA-P2BA-TRB-45MM	ESA-P2BA-TRB-45MME																		
50 mm	ESA-P2BA-TRB-50MM	ESA-P2BA-TRB-50MME																		
2 3/16	ESA-P2BA-TRB-2 3/16	ESA-P2BA-TRB-2 3/16E	**79.4**	**244.3**	**67.3**	**170.0**	**201.7**	**15.9**	**81.3**	**19.1**	**35.1**	**38.1**	**137.3**	**95.0**	**63.5**	**152.4**	**47.6**	**31.4**	**14.3**	**9.0**
55 mm	ESA-P2BA-TRB-55MM	ESA-P2BA-TRB-55MME	3 1/8	9 5/8	2 21/32	6 11/16	7 15/16	5/8	3 3/16	3/4	1 3/8	1 1/2	5 13/32	3 3/4	2 1/2	6	1 7/8	1 15/64	9/16	19.8
2 1/4	ESA-P2BA-TRB-2 1/4	ESA-P2BA-TRB-2 1/4E																		
2 7/16	ESA-P2BA-TRB-2 7/16	ESA-P2BA-TRB-2 7/16E	**84.1**	**263.7**	**73.2**	**176.3**	**220.7**	**15.9**	**87.4**	**19.9**	**41.4**	**41.4**	**153.7**	**103.2**	**69.9**	**162.8**	**50.8**	**33.3**	**14.3**	**12.0**
2 1/2	ESA-P2BA-TRB-2 1/2	ESA-P2BA-TRB-2 1/2E	3 5/16	10 3/4	2 7/8	6 15/16	8 11/16	5/8	3 7/16	3/4	1 5/8	1 5/8	6 1/16	4 1/16	2 3/4	6 13/32	2	1 5/16	9/16	26.4
60 mm	ESA-P2BA-TRB-60MM	ESA-P2BA-TRB-60MME																		
65 mm	ESA-P2BA-TRB-65MM	ESA-P2BA-TRB-65MME																		
2 11/16	ESA-P2BA-TRB-2 11/16	ESA-P2BA-TRB-2 11/16E																		
2 3/4	ESA-P2BA-TRB-2 3/4	ESA-P2BA-TRB-2 3/4E																		
2 15/16	ESA-P2BA-TRB-2 15/16	ESA-P2BA-TRB-2 15/16E	**93.7**	**298.5**	**84.3**	**204.7**	**254.0**	**19.1**	**99.4**	**22.4**	**47.0**	**47.8**	**171.2**	**119.9**	**79.5**	**190.5**	**57.2**	**36.5**	**14.3**	**17.0**
3	ESA-P2BA-TRB-3	ESA-P2BA-TRB-3E	3 11/16	11 3/4	3 31/64	8 1/16	10	5/8	3 29/32	7/8	1 55/64	1 7/8	6 3/4	4 23/32	3 1/8	7 1/2	2 1/4	1 7/16	9/16	37.6
70 mm	ESA-P2BA-TRB-70MM	ESA-P2BA-TRB-70MME																		
75 mm	ESA-P2BA-TRB-75MM	ESA-P2BA-TRB-75MME																		
3 3/16	ESA-P2BA-TRB-3 3/16	ESA-P2BA-TRB-3 3/16E																		
3 1/4	ESA-P2BA-TRB-3 1/4	ESA-P2BA-TRB-3 1/4E																		
3 7/16	ESA-P2BA-TRB-3 7/16	ESA-P2BA-TRB-3 7/16E	**106.4**	**349.3**	**101.6**	**257.1**	**298.5**	**22.2**	**114.3**	**25.4**	**46.2**	**57.2**	**201.7**	**140.5**	**95.3**	**236.5**	**63.5**	**42.9**	**14.3**	**29.9**
3 1/2	ESA-P2BA-TRB-3 1/2	ESA-P2BA-TRB-3 1/2E	4 3/16	13 3/4	4	10 1/8	11 3/4	7/8	4 1/2	1	1 53/64	2 1/4	7 15/16	5 17/32	3 3/4	9 5/16	2 1/2	1 11/16	9/16	65.9
80 mm	ESA-P2BA-TRB-80MM	ESA-P2BA-TRB-80MME																		
85 mm	ESA-P2BA-TRB-85MM	ESA-P2BA-TRB-85MME																		
90 mm	ESA-P2BA-TRB-90MM	ESA-P2BA-TRB-90MME																		

TYPE E SELF-ALIGNING (ESA) MOUNTED TAPERED ROLLER BEARING PILLOW BLOCK: TWO-BOLT BASE DOUBLE LOCKING COLLAR

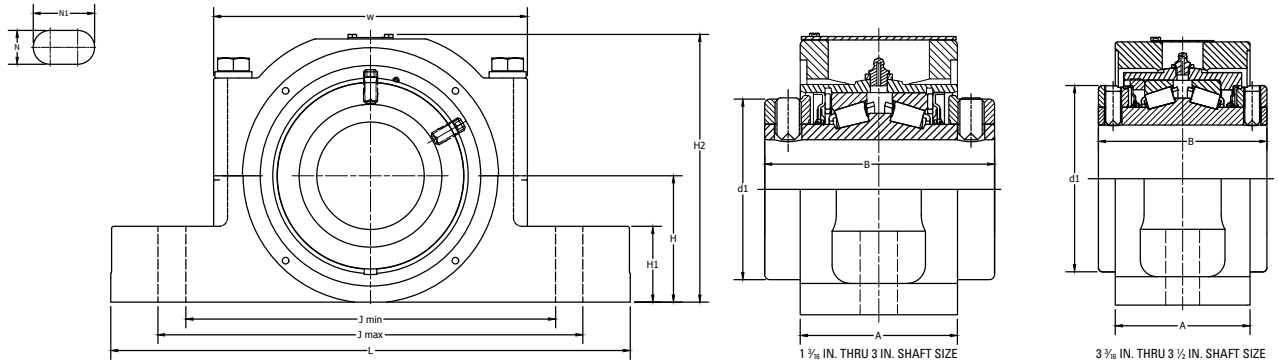

Shaft Dia.	Part No. Non-Expansion	Part No. Expansion	B	L	A	J min	J max	Bolt Dia.	N	N_1	H_1	H_2	d_1	H	W	Expansion	Approx. Wt.
mm in.			**mm** in.	**mm** in.	**mm** in.	**mm** in.	**mm** in.	**mm** in.	**mm** in.	**mm** in.	**mm** in.	**mm** in.	**mm** in.	**mm** in.	**mm** in.	**mm** in.	**kg** lbs.
1 3/16	ESA-P2B-TRB-1 3/16	ESA-P2B-TRB-1 3/16E	**69.9**	**158.8**	**47.8**	**115.8**	**125.5**	**M12**	**14.2**	**19.1**	**22.4**	**91.3**	**57.2**	**38.1**	**103.1**	**14.2**	**2.9**
1 1/4	ESA-P2B-TRB-1 1/4	ESA-P2B-TRB-1 1/4E	2 3/4	6 1/4	1 7/8	4 9/16	4 15/16	1/2	9/16	3/4	7/8	3 19/32	2 1/4	1 1/2	4 1/16	9/16	6.4
1 3/8	ESA-P2B-TRB-1 3/8	ESA-P2B-TRB-1 3/8E	**76.2**	**184.2**	**55.6**	**134.9**	**150.9**	**M12**	**16.0**	**23.9**	**28.7**	**107.7**	**69.9**	**47.8**	**117.6**	**14.2**	**4.7**
1 7/16	ESA-P2B-TRB-1 7/16	ESA-P2B-TRB-1 7/16E	3	7 1/4	2 3/16	5 5/16	5 15/16	1/2	5/8	15/16	1 1/8	4 1/4	2 3/4	1 7/8	4 5/8	9/16	10.3
35 mm	ESA-P2B-TRB-35MM	ESA-P2B-TRB-35MME															
1 1/2	ESA-P2B-TRB-1 1/2	ESA-P2B-TRB-1 1/2E															
1 5/8	ESA-P2B-TRB-1 5/8	ESA-P2B-TRB-1 5/8E	**85.9**	**196.9**	**60.2**	**141.2**	**163.6**	**M12**	**16.0**	**27.2**	**31.8**	**118.3**	**80.9**	**54.1**	**130.3**	**14.2**	**6.0**
1 11/16	ESA-P2B-TRB-1 11/16	ESA-P2B-TRB-1 11/16E	3 3/8	7 3/4	2 3/8	5 9/16	6 7/16	1/2	5/8	1 1/16	1 1/4	4 21/32	3 3/16	2 1/8	5 1/8	9/16	13.3
40 mm	ESA-P2B-TRB-40MM	ESA-P2B-TRB-40MME															
1 3/4	ESA-P2B-TRB-1 3/4	ESA-P2B-TRB-1 3/4E															
1 7/8	ESA-P2B-TRB-1 7/8	ESA-P2B-TRB-1 7/8E															
1 15/16	ESA-P2B-TRB-1 15/16	ESA-P2B-TRB-1 15/16E	**88.9**	**225.6**	**64.3**	**160.3**	**182.6**	**M16**	**19.1**	**30.2**	**33.3**	**126.2**	**87.1**	**57.2**	**141.2**	**14.2**	**7.4**
2	ESA-P2B-TRB-2	ESA-P2B-TRB-2E	3 1/2	8 7/8	2 17/32	6 5/16	7 3/16	5/8	3/4	1 3/16	1 5/16	4 31/32	3 7/16	2 1/4	5 9/16	9/16	16.4
45 mm	ESA-P2B-TRB-45MM	ESA-P2B-TRB-45MME															
50 mm	ESA-P2B-TRB-50MM	ESA-P2B-TRB-50MME															
2 3/16	ESA-P2B-TRB-2 3/16	ESA-P2B-TRB-2 3/16E	**95.3**	**244.3**	**67.5**	**169.9**	**201.7**	**M16**	**19.3**	**35.1**	**38.1**	**137.3**	**95.0**	**63.5**	**152.4**	**14.2**	**9.0**
55 mm	ESA-P2B-TRB-55MM	ESA-P2B-TRB-55MME	3 3/4	9 5/8	2 21/32	6 11/16	7 15/16	5/8	3/4	1 3/8	1 1/2	5 13/32	3 3/4	2 1/2	6	9/16	19.8
2 1/4	ESA-P2B-TRB-2 1/4	ESA-P2B-TRB-2 1/4E															
2 7/16	ESA-P2B-TRB-2 7/16	ESA-P2B-TRB-2 7/16E	**101.6**	**263.7**	**73.2**	**176.3**	**220.7**	**M16**	**19.3**	**41.4**	**41.4**	**153.7**	**103.2**	**69.9**	**162.7**	**14.2**	**12.0**
2 1/2	ESA-P2B-TRB-2 1/2	ESA-P2B-TRB-2 1/2E	4	10 3/8	2 7/8	6 15/16	8 11/16	5/8	3/4	1 5/8	1 5/8	6 1/16	4 1/16	2 3/4	6 13/32	9/16	26.4
60 mm	ESA-P2B-TRB-60MM	ESA-P2B-TRB-60MME															
65 mm	ESA-P2B-TRB-65MM	ESA-P2B-TRB-65MME															
2 11/16	ESA-P2B-TRB-2 11/16	ESA-P2B-TRB-2 11/16E															
2 3/4	ESA-P2B-TRB-2 3/4	ESA-P2B-TRB-2 3/4E															
2 15/16	ESA-P2B-TRB-2 15/16	ESA-P2B-TRB-2 15/16E	**114.3**	**298.5**	**84.3**	**204.7**	**254.0**	**M20**	**22.4**	**46.8**	**47.8**	**171.2**	**119.9**	**79.5**	**190.5**	**14.2**	**17.1**
3	ESA-P2B-TRB-3	ESA-P2B-TRB-3E	4 1/2	11 3/4	3 5/16	8 1/16	10	3/4	7/8	1 27/32	1 7/8	6 3/4	4 23/32	3 1/8	7 1/2	9/16	37.6
70 mm	ESA-P2B-TRB-70MM	ESA-P2B-TRB-70MME															
75 mm	ESA-P2B-TRB-75MM	ESA-P2B-TRB-75MME															
3 3/16	ESA-P2B-TRB-3 3/16	ESA-P2B-TRB-3 3/16E															
3 1/4	ESA-P2B-TRB-3 1/4	ESA-P2B-TRB-3 1/4E															
3 7/16	ESA-P2B-TRB-3 7/16	ESA-P2B-TRB-3 7/16E	**127.0**	**349.3**	**101.6**	**257.0**	**298.5**	**M24**	**25.7**	**46.2**	**57.2**	**201.7**	**140.5**	**95.3**	**236.5**	**14.2**	**29.9**
3 1/2	ESA-P2B-TRB-3 1/2	ESA-P2B-TRB-3 1/2E	5	13 3/4	4	10 1/8	11 3/4	7/8	1	1 13/16	2 1/4	7 15/16	5 17/32	3 3/4	9 5/16	9/16	66
80 mm	ESA-P2B-TRB-80MM	ESA-P2B-TRB-80MME															
85 mm	ESA-P2B-TRB-85MM	ESA-P2B-TRB-85MME															
90 mm	ESA-P2B-TRB-90MM	ESA-P2B-TRB-90MME															

TYPE E SELF-ALIGNING (ESA) MOUNTED TAPERED ROLLER BEARING PILLOW BLOCK: FOUR-BOLT BASE SINGLE LOCKING COLLAR

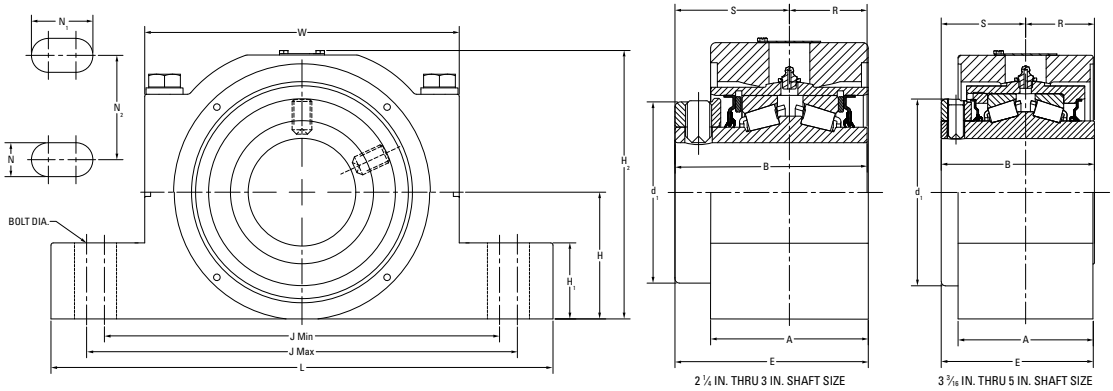

Shaft Dia.	Part No. Non-Expansion	Part No. Expansion	B	L	A	J min	J max	Bolt Dia.	E	N	N_1	N_2	H_1	H_2	d_1	H	W	S	R	Expansion	Approx. Wt.
mm in.			**mm** in.	**mm** in.	**mm** in.	**mm** in.	**mm** in.	**mm** in.	**mm** in.	**mm** in.	**mm** in.	**mm** in.	**mm** in.	**mm** in.	**mm** in.	**mm** in.	**mm** in.	**mm** in.	**mm** in.	**mm** in.	**kg** lbs.
2 1/4	ESA-P4BA-TRB-2 1/4	ESA-P4BA-TRB-2 1/4E																			
2 7/16	ESA-P4BA-TRB-2 7/16	ESA-P4BA-TRB-2 7/16E																			
2 1/2	ESA-P4BA-TRB-2 1/2	ESA-P4BA-TRB-2 1/2E	**84.1**	**263.7**	**88.9**	**196.9**	**222.3**	**M16**	**95.3**	**19.1**	**31.8**	**47.8**	**41.4**	**154.0**	**103.2**	**69.9**	**162.8**	**50.8**	**33.3**	**14.3**	**14.6**
60 mm	ESA-P4BA-TRB-60MM	ESA-P4BA-TRB-60MME	3 5/16	10 3/8	3 1/2	7 3/4	8 3/4	5/8	3 3/4	3/4	1 1/4	1 7/8	1 5/8	6 1/16	4 1/16	2 3/4	6 13/32	2	1 5/16	9/16	32.1
65 mm	ESA-P4BA-TRB-65MM	ESA-P4BA-TRB-65MME																			
2 11/16	ESA-P4BA-TRB-2 11/16	ESA-P4BA-TRB-2 11/16E																			
2 3/4	ESA-P4BA-TRB-2 3/4	ESA-P4BA-TRB-2 3/4E																			
2 15/16	ESA-P4BA-TRB-2 15/16	ESA-P4BA-TRB-2 15/16E	**93.7**	**298.5**	**95.25**	**222.3**	**254.0**	**M16**	**104.8**	**19.3**	**35.1**	**53.8**	**47.8**	**171.5**	**119.9**	**79.5**	**190.5**	**57.2**	**36.5**	**14.3**	**19.9**
3	ESA-P4BA-TRB-3	ESA-P4BA-TRB-3E	3 11/16	11 3/4	3 3/4	8 3/4	10	5/8	4 1/8	3/4	1 3/8	2 1/8	1 7/8	6 3/4	4 23/32	3 1/8	7 1/2	2 1/4	1 7/16	9/16	43.8
70 mm	ESA-P4BA-TRB-70MM	ESA-P4BA-TRB-70MME																			
75 mm	ESA-P4BA-TRB-75MM	ESA-P4BA-TRB-75MME																			
3 3/16	ESA-P4BA-TRB-3 3/16	ESA-P4BA-TRB-3 3/16E																			
3 1/4	ESA-P4BA-TRB-3 1/4	ESA-P4BA-TRB-3 1/4E																			
3 7/16	ESA-P4BA-TRB-3 7/16	ESA-P4BA-TRB-3 7/16E																			
3 1/2	ESA-P4BA-TRB-3 1/2	ESA-P4BA-TRB-3 1/2E	**106.4**	**349.3**	**114.3**	**268.2**	**298.5**	**M20**	**120.7**	**22.6**	**37.6**	**60.5**	**57.2**	**201.6**	**140.5**	**95.3**	**234.5**	**63.5**	**42.9**	**14.3**	**34.3**
80 mm	ESA-P4BA-TRB-80MM	ESA-P4BA-TRB-80MME	4 3/16	13 3/4	4 1/2	10 9/16	11 3/4	3/4	4 3/4	7/8	1 31/64	2 3/8	2 1/4	7 15/16	5 17/32	3 3/4	9 5/16	2 1/2	1 11/16	9/16	75.5
85 mm	ESA-P4BA-TRB-85MM	ESA-P4BA-TRB-85MME																			
90 mm	ESA-P4BA-TRB-90MM	ESA-P4BA-TRB-90MME																			
3 15/16	ESA-P4BA-TRB-3 15/16	ESA-P4BA-TRB-3 15/16E																			
4	ESA-P4BA-TRB-4	ESA-P4BA-TRB-4E	**133.4**	**387.4**	**120.4**	**279.4**	**330.2**	**M20**	**139.6**	**22.4**	**47.8**	**57.2**	**62.0**	**223.0**	**154.0**	**108.0**	**256.0**	**79.4**	**54.0**	**14.3**	**48.0**
100 mm	ESA-P4BA-TRB-100MM	ESA-P4BA-TRB-100MME	5 1/4	15 1/4	4 3/4	11	13	3/4	5 1/2	7/8	1 7/8	2 1/4	2 7/16	8 25/32	6 1/16	4 1/4	10 5/64	3 1/8	2 1/8	9/16	105.7
4 7/16	ESA-P4BA-TRB-4 7/16	ESA-P4BA-TRB-4 7/16E																			
4 1/2	ESA-P4BA-TRB-4 1/2	ESA-P4BA-TRB-4 1/2E	**142.9**	**419.1**	**129.0**	**298.5**	**352.6**	**M20**	**150.2**	**22.4**	**49.3**	**63.5**	**69.9**	**247.7**	**171.1**	**120.7**	**281.4**	**85.7**	**57.2**	**14.3**	**59.2**
110 mm	ESA-P4BA-TRB-110MM	ESA-P4BA-TRB-110MME	5 5/8	16 1/2	5 5/64	11 3/4	13 7/8	3/4	5 29/32	7/8	1 15/16	2 1/2	2 3/4	9 3/4	6 47/64	4 3/4	11 5/64	3 3/8	2 1/4	9/16	130.4
115 mm	ESA-P4BA-TRB-115MM	ESA-P4BA-TRB-115MME																			
4 15/16	ESA-P4BA-TRB-4 15/16	ESA-P4BA-TRB-4 15/16E																			
5	ESA-P4BA-TRB-5	ESA-P4BA-TRB-5E	**158.0**	**469.9**	**143.8**	**342.9**	**403.4**	**M24**	**137.8**	**26.5**	**56.6**	**73.2**	**76.2**	**288.1**	**196.9**	**139.7**	**322.8**	**65.9**	**97.8**	**14.3**	**86.0**
125 mm	ESA-P4BA-TRB-125MM	ESA-P4BA-TRB-125MME	6 7/32	18 1/2	5 21/32	13 1/2	15 7/8	7/8	5 27/64	1	2 15/64	2 7/8	3	11 11/32	7 3/4	5 1/2	12 23/32	2 19/32	3 55/64	9/16	189.5

TYPE E SELF-ALIGNING (ESA) MOUNTED TAPERED ROLLER BEARING PILLOW BLOCK: FOUR-BOLT BASE DOUBLE LOCKING COLLAR

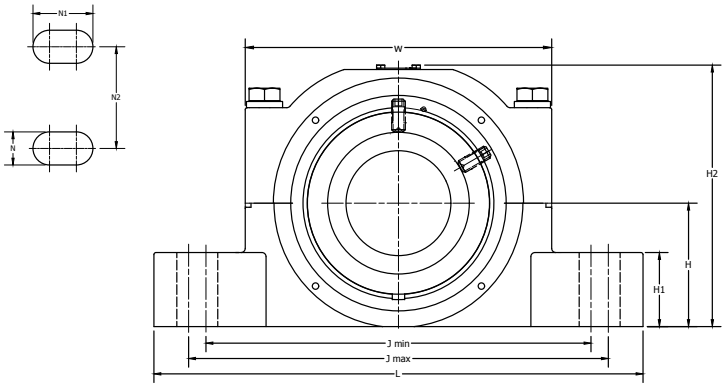

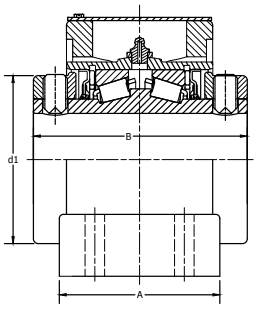

2 ¼ IN. THRU 3 IN. SHAFT SIZE

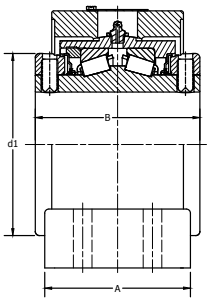

3 3/16 IN. THRU 5 IN. SHAFT SIZE

Shaft Dia.	Part No. Non-Expansion	Part No. Expansion	B	L	A	J min	J max	Bolt Dia.	N	N_1	N_2	H_1	H_2	d_1	H	W	Expansion	Approx. Wt.
mm in.			**mm** in.	**mm** in.	**mm** in.	**mm** in.	**mm** in.	**mm** in.	**mm** in.	**mm** in.	**mm** in.	**mm** in.	**mm** in.	**mm** in.	**mm** in.	**mm** in.	**mm** in.	**kg** lbs.
2 ¼	ESA-P4B-TRB-2 ¼	ESA-P4B-TRB-2 ¼E																
2 7/16	ESA-P4B-TRB-2 7/16	ESA-P4B-TRB-2 7/16E																
2 ½	ESA-P4B-TRB-2 ½	ESA-P4B-TRB-2 ½E	**101.6** 4	**263.5** 10 3/8	**88.9** 3 ½	**196.9** 7 ¾	**222.3** 8 ¾	**M16** ⅝	**19.1** ¾	**31.8** 1 ¼	**47.8** 1 ⅞	**41.4** 1 ⅝	**154.0** 6 1/16	**103.2** 4 1/16	**69.9** 2 ¾	**162.7** 6 13/32	**14.3** 9/16	**14.6** 32.1
60 mm	ESA-P4B-TRB-60MM	ESA-P4B-TRB-60MME																
65 mm	ESA-P4B-TRB-65MM	ESA-P4B-TRB-65MME																
2 11/16	ESA-P4B-TRB-2 11/16	ESA-P4B-TRB-2 11/16E																
2 ¾	ESA-P4B-TRB-2 ¾	ESA-P4B-TRB-2 ¾E																
2 15/16	ESA-P4B-TRB-2 15/16	ESA-P4B-TRB-2 15/16E	**114.3** 4 ½	**298.5** 11 ¾	**95.3** 3 ¾	**222.3** 8 ¾	**254.0** 10	**M16** ⅝	**19.3** ¾	**35.1** 1 ⅜	**53.8** 2 ⅛	**47.8** 1 ⅞	**171.5** 6 ¾	**119.9** 4 23/32	**79.5** 3 ⅛	**190.5** 7 ½	**14.3** 9/16	**19.9** 43.8
3	ESA-P4B-TRB-3	ESA-P4B-TRB-3E																
70 mm	ESA-P4B-TRB-70MM	ESA-P4B-TRB-70MME																
75 mm	ESA-P4B-TRB-75MM	ESA-P4B-TRB-75MME																
3 3/16	ESA-P4B-TRB-3 3/16	ESA-P4B-TRB-3 3/16E																
3 ¼	ESA-P4B-TRB-3 ¼	ESA-P4B-TRB-3 ¼E																
3 7/16	ESA-P4B-TRB-3 7/16	ESA-P4B-TRB-3 7/16E																
3 ½	ESA-P4B-TRB-3 ½	ESA-P4B-TRB-3 ½E	**127.0** 5	**349.3** 13 ¾	**114.3** 4 ½	**268.3** 10 9/16	**298.5** 11 ¾	**M20** ¾	**22.2** ⅞	**37.3** 1 15/32	**60.5** 2 ⅜	**57.2** 2 ¼	**201.6** 7 15/16	**140.5** 5 17/32	**95.3** 3 ¾	**236.5** 9 5/16	**14.3** 9/16	**34.3** 75.5
80 mm	ESA-P4B-TRB-80MM	ESA-P4B-TRB-80MME																
85 mm	ESA-P4B-TRB-85MM	ESA-P4B-TRB-85MME																
90 mm	ESA-P4B-TRB-90MM	ESA-P4B-TRB-90MME																
3 15/16	ESA-P4B-TRB-3 15/16	ESA-P4B-TRB-3 15/16E																
4	ESA-P4B-TRB-4	ESA-P4B-TRB-4E	**158.8** 6 ¼	**387.4** 15 ¼	**120.7** 4 ¾	**279.4** 11	**330.2** 13	**M20** ¾	**22.4** ⅞	**47.8** 1 ⅞	**57.2** 2 ¼	**61.9** 2 7/16	**223.0** 8 25/32	**154.0** 6 1/16	**108.0** 4 ¼	**256.4** 10 3/32	**14.3** 9/16	**48.0** 105.7
100 mm	ESA-P4B-TRB-100MM	ESA-P4B-TRB-100MME																
4 7/16	ESA-P4B-TRB-4 7/16	ESA-P4B-TRB-4 7/16E																
4 ½	ESA-P4B-TRB-4 ½	ESA-P4B-TRB-4 ½E	**171.5** 6 ¾	**419.1** 16 ½	**129.4** 5 3/32	**298.5** 11 ¾	**352.6** 13 ⅞	**M20** ¾	**22.4** ⅞	**49.2** 1 15/16	**63.5** 2 ½	**69.9** 2 ¾	**247.7** 9 ¾	**171.1** 6 47/64	**120.7** 4 ¾	**281.8** 11 3/32	**14.3** 9/16	**59.2** 130.4
110 mm	ESA-P4B-TRB-110MM	ESA-P4B-TRB-110MME																
115 mm	ESA-P4B-TRB-115MM	ESA-P4B-TRB-115MME																
4 15/16	ESA-P4B-TRB-4 15/16	ESA-P4B-TRB-4 15/16E																
5	ESA-P4B-TRB-5	ESA-P4B-TRB-5E	**184.2** 7 ¼	**469.9** 18 ½	**143.7** 5 21/32	**342.9** 13 ½	**403.4** 15 ⅞	**M24** ⅞	**26.5** 1.04	**56.4** 2 7/32	**73.2** 2 ⅞	**76.2** 3	**288.1** 11 11/32	**196.9** 7 ¾	**139.7** 5 ½	**323.1** 12 23/32	**14.3** 9/16	**86.0** 189.5
125 mm	ESA-P4B-TRB-125MM	ESA-P4B-TRB-125MME																

TYPE E SELF-ALIGNING (ESA) MOUNTED TAPERED ROLLER BEARING: FOUR-BOLT FLANGE BLOCK SINGLE LOCKING COLLAR

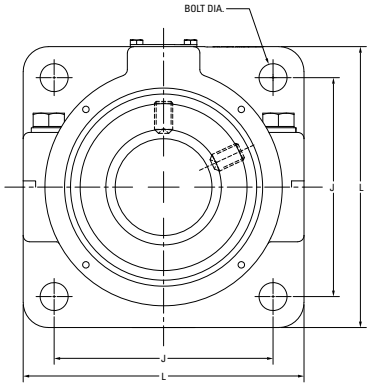

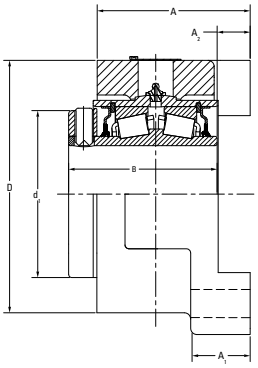

1 3/16 IN. THRU 3 IN. SHAFT SIZE

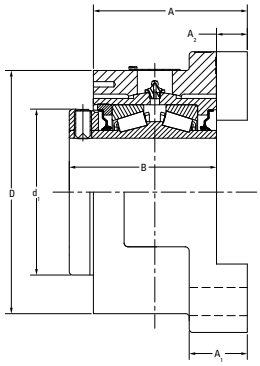

3 3/16 IN. THRU 4 15/16 IN. SHAFT SIZE

Shaft Dia.	Part No. Non-Expansion	Part No. Expansion	B	L	A	J	A_2	Bolt Dia	A_1	D	d_1	Expansion	Approx. Wt.
mm in.			**mm** in.	**mm** in.	**mm** in.	**mm** in.	**mm** in.	**mm** in.	**mm** in.	**mm** in.	**mm** in.	**mm** in.	**kg** lbs.
1 3/16	ESA-4BFA-TRB-1 3/16	ESA-4BFA-TRB-1 3/16 E	**60.3** 2 3/8	**101.6** 4	**58.7** 2 5/16	**73.0** 2 7/8	**10.8** 27/64	**M10** 3/8	**25.4** 1	**88.9** 3 1/2	**57.2** 2 1/4	**14.3** 9/16	**2.6** 5.8
1 1/4	ESA-4BFA-TRB-1 1/4	ESA-4BFA-TRB-1 1/4 E											
1 3/8	ESA-4BFA-TRB-1 3/8	ESA-4BFA-TRB-1 3/8 E	**64.3** 2 17/32	**117.5** 4 5/8	**65.1** 2 9/16	**88.9** 3 1/2	**13.1** 33/64	**M12** 1/2	**25.4** 1	**101.6** 4	**69.9** 2 3/4	**14.3** 9/16	**3.7** 8.1
1 7/16	ESA-4BFA-TRB-1 7/16	ESA-4BFA-TRB-1 7/16 E											
35 mm	ESA-4BFA-TRB-35MM	ESA-4BFA-TRB-35MME											
1 1/2	ESA-4BFA-TRB-1 1/2	ESA-4BFA-TRB-1 1/2 E	**72.2** 2 27/32	**136.5** 5 3/8	**74.6** 2 15/16	**104.8** 4 1/8	**16.8** 11/16	**M12** 1/2	**30.2** 1 3/16	**121.2** 4 13/16	**80.9** 3 3/16	**14.3** 9/16	**5.8** 12.7
1 5/8	ESA-4BFA-TRB-1 5/8	ESA-4BFA-TRB-1 5/8 E											
1 11/16	ESA-4BFA-TRB-1 11/16	ESA-4BFA-TRB-1 11/16 E											
40 mm	ESA-4BFA-TRB-40MM	ESA-4BFA-TRB-40MME											
1 3/4	ESA-4BFA-TRB-1 3/4	ESA-4BFA-TRB-1 3/4 E	**75.0** 2 61/64	**142.9** 5 5/8	**77.8** 3 1/16	**111.1** 4 3/8	**17.1** 22/32	**M12** 1/2	**30.2** 1 3/16	**120.7** 4 3/4	**87.1** 3 7/16	**14.3** 9/16	**5.9** 13.1
1 7/8	ESA-4BFA-TRB-1 7/8	ESA-4BFA-TRB-1 7/8 E											
1 15/16	ESA-4BFA-TRB-1 15/16	ESA-4BFA-TRB-1 15/16 E											
2	ESA-4BFA-TRB-2	ESA-4BFA-TRB-2 E											
45 mm	ESA-4BFA-TRB-45MM	ESA-4BFA-TRB-45MME											
50 mm	ESA-4BFA-TRB-50MM	ESA-4BFA-TRB-50MME											
2 3/16	ESA-4BFA-TRB-2 3/16	ESA-4BFA-TRB-2 3/16 E	**79.4** 3 1/8	**158.8** 6 1/4	**82.6** 3 1/4	**123.8** 4 7/8	**18.3** 23/32	**M16** 5/8	**34.9** 1 3/8	**133.4** 5 1/4	**95.0** 3 3/4	**14.3** 9/16	**7.8** 17.3
55 mm	ESA-4BFA-TRB-55MM	ESA-4BFA-TRB-55MME											
2 1/4	ESA-4BFA-TRB-2 1/4	ESA-4BFA-TRB-2 1/4 E	**84.1** 3 5/16	**174.6** 6 7/8	**90.5** 3 9/16	**136.5** 5 3/8	**26.2** 1 1/32	**M16** 5/8	**38.1** 1 1/2	**149.2** 5 7/8	**103.2** 4 1/16	**14.3** 9/16	**10.5** 23.1
2 7/16	ESA-4BFA-TRB-2 7/16	ESA-4BFA-TRB-2 7/16 E											
2 1/2	ESA-4BFA-TRB-2 1/2	ESA-4BFA-TRB-2 1/2 E											
60 mm	ESA-4BFA-TRB-60MM	ESA-4BFA-TRB-60MME											
65 mm	ESA-4BFA-TRB-65MM	ESA-4BFA-TRB-65MME											

Continued on next page.

TYPE E SELF-ALIGNING (ESA) MOUNTED TAPERED ROLLER BEARING: FOUR-BOLT FLANGE BLOCK SINGLE LOCKING COLLAR

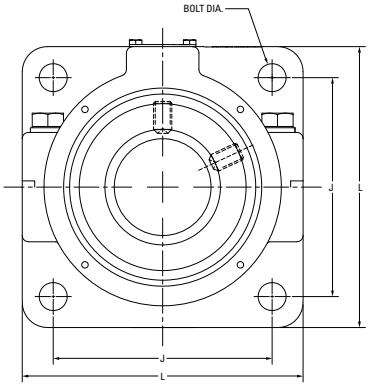

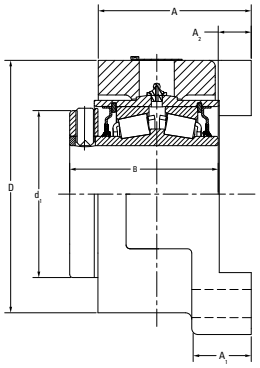

1 3/16 IN. THRU 3 IN. SHAFT SIZE

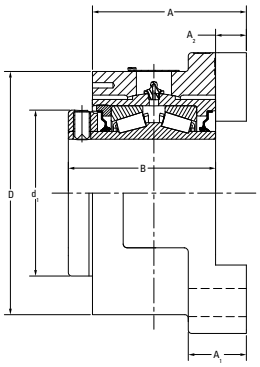

3 3/16 IN. THRU 4 15/16 IN. SHAFT SIZE

Shaft Dia.	Part No. Non-Expansion	Part No. Expansion	B	L	A	J	A_2	Bolt Dia	A_1	D	d_1	Expansion	Approx. Wt.
mm in.			**mm** in.	**mm** in.	**mm** in.	**mm** in.	**mm** in.	**mm** in.	**mm** in.	**mm** in.	**mm** in.	**mm** in.	**kg** lbs.
2 11/16	ESA-4BFA-TRB-2 11/16	ESA-4BFA-TRB-2 11/16 E											
2 3/4	ESA-4BFA-TRB-2 3/4	ESA-4BFA-TRB-2 3/4 E											
2 15/16	ESA-4BFA-TRB-2 15/16	ESA-4BFA-TRB-2 15/16 E	**93.7** 3 11/16	**196.9** 7 3/4	**100.0** 3 15/16	**152.4** 6	**26.2** 1 1/32	**M20** 3/4	**41.3** 1 5/8	**165.1** 6 1/2	**119.9** 4 23/32	**14.3** 9/16	**15.6** 34.5
3	ESA-4BFA-TRB-3	ESA-4BFA-TRB-3 E											
70 mm	ESA-4BFA-TRB-70MM	ESA-4BFA-TRB-70MME											
75 mm	ESA-4BFA-TRB-75MM	ESA-4BFA-TRB-75MME											
3 3/16	ESA-4BFA-TRB-3 3/16	ESA-4BFA-TRB-3 3/16 E											
3 1/4	ESA-4BFA-TRB-3 1/4	ESA-4BFA-TRB-3 1/4 E											
3 7/16	ESA-4BFA-TRB-3 7/16	ESA-4BFA-TRB-3 7/16 E											
3 1/2	ESA-4BFA-TRB-3 1/2	ESA-4BFA-TRB-3 1/2 E	**106.4** 4 3/16	**235.0** 9 1/4	**114.3** 4 1/2	**177.8** 7	**27.0** 1 1/16	**M20** 3/4	**47.6** 1 7/8	**203.2** 8	**140.5** 5 17/32	**14.3** 9/16	**25.5** 56.3
80 mm	ESA-4BFA-TRB-80MM	ESA-4BFA-TRB-80MME											
85 mm	ESA-4BFA-TRB-85MM	ESA-4BFA-TRB-85MME											
90 mm	ESA-4BFA-TRB-90MM	ESA-4BFA-TRB-90MME											
3 15/16	ESA-4BFA-TRB-3 15/16	ESA-4BFA-TRB-3 15/16 E											
4	ESA-4BFA-TRB-4	ESA-4BFA-TRB-4 E	**133.4** 5 1/4	**260.4** 10 1/4	**142.9** 5 5/8	**196.9** 7 3/4	**31.8** 1 1/4	**M24** 7/8	**54.0** 2 1/8	**225.4** 8 7/8	**154.0** 6 1/16	**14.3** 9/16	**38.2** 84.2
100 mm	ESA-4BFA-TRB-100MM	ESA-4BFA-TRB-100MME											
4 7/16	ESA-4BFA-TRB-4 7/16	ESA-4BFA-TRB-4 7/16 E											
4 1/2	ESA-4BFA-TRB-4 1/2	ESA-4BFA-TRB-4 1/2 E											
110 mm	ESA-4BFA-TRB-110MM	ESA-4BFA-TRB-110MME	**142.9** 5 5/8	**292.1** 11 1/2	**152.4** 6	**222.3** 8 3/4	**37.0** 1 15/32	**M24** 1	**66.7** 2 5/8	**247.7** 9 3/4	**171.7** 6 47/64	**14.3** 9/16	**51.6** 113.9
115 mm	ESA-4BFA-TRB-115MM	ESA-4BFA-TRB-115MME											

TYPE E SELF-ALIGNING (ESA) MOUNTED TAPERED ROLLER BEARING: FOUR-BOLT FLANGE BLOCK DOUBLE LOCKING COLLAR

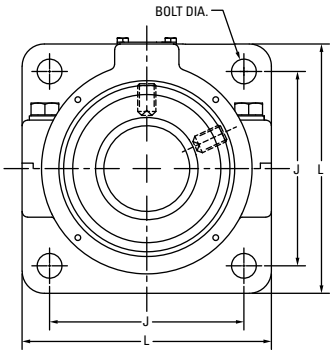

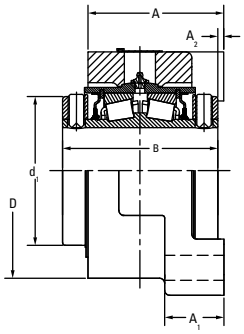

1 3/16 IN. THRU 3 IN. SHAFT SIZE

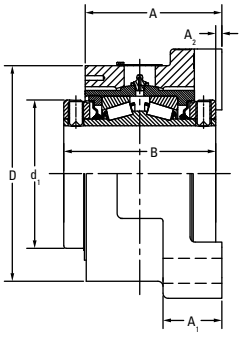

3 3/16 IN. THRU 4 15/16 IN. SHAFT SIZE

Shaft Dia.	Part No. Non-Expansion	Part No. Expansion	B	L	A	J	A_2	Bolt Dia	A_1	D	d_1	Expansion	Approx. Wt.
mm in.			**mm** in.	**mm** in.	**mm** in.	**mm** in.	**mm** in.	**mm** in.	**mm** in.	**mm** in.	**mm** in.	**mm** in.	**kg** lbs.
1 3/16	ESA-4BF-TRB-1 3/16	ESA-4BF-TRB-1 3/16 E	**69.9** 2 3/4	**101.6** 4	**58.7** 2 5/16	**73.0** 2 7/8	**1.2** 3/64	**M10** 3/8	**25.4** 1	**88.9** 3 1/2	**57.2** 2 1/4	**14.3** 9/16	**2.6** 5.8
1 1/4	ESA-4BF-TRB-1 1/4	ESA-4BF-TRB-1 1/4 E											
1 3/8	ESA-4BF-TRB-1 3/8	ESA-4BF-TRB-1 3/8 E	**76.2** 3	**117.5** 4 5/8	**65.1** 2 9/16	**88.9** 3 1/2	**1.2** 3/64	**M12** 1/2	**25.4** 1	**101.6** 4	**69.9** 2 3/4	**14.3** 9/16	**3.7** 8.1
1 7/16	ESA-4BF-TRB-1 7/16	ESA-4BF-TRB-1 7/16 E											
35 mm	ESA-4BF-TRB-35MM	ESA-4BF-TRB-35MME											
1 1/2	ESA-4BF-TRB-1 1/2	ESA-4BF-TRB-1 1/2 E	**85.9** 3 3/8	**136.5** 5 3/8	**74.6** 2 15/16	**104.8** 4 1/8	**3.2** 1/8	**M12** 1/2	**30.2** 1 3/16	**121.2** 4 13/16	**80.9** 3 3/16	**14.3** 9/16	**5.8** 12.7
1 5/8	ESA-4BF-TRB-1 5/8	ESA-4BF-TRB-1 5/8 E											
1 11/16	ESA-4BF-TRB-1 11/16	ESA-4BF-TRB-1 11/16 E											
40 mm	ESA-4BF-TRB-40MM	ESA-4BF-TRB-40MME											
1 3/4	ESA-4BF-TRB-1 3/4	ESA-4BF-TRB-1 3/4 E	**88.9** 3 1/2	**142.9** 5 5/8	**77.8** 3 1/16	**111.1** 4 3/8	**3.2** 1/8	**M12** 1/2	**30.2** 1 3/16	**120.7** 4 3/4	**87.1** 3 7/16	**14.3** 9/16	**5.9** 13.1
1 7/8	ESA-4BF-TRB-1 7/8	ESA-4BF-TRB-1 7/8 E											
1 15/16	ESA-4BF-TRB-1 15/16	ESA-4BF-TRB-1 15/16 E											
2	ESA-4BF-TRB-2	ESA-4BF-TRB-2 E											
45 mm	ESA-4BF-TRB-45MM	ESA-4BF-TRB-45MME											
50 mm	ESA-4BF-TRB-50MM	ESA-4BF-TRB-50MME											
2 3/16	ESA-4BF-TRB-2 3/16	ESA-4BF-TRB-2 3/16 E	**95.3** 3 3/4	**158.8** 6 1/4	**82.6** 3 1/4	**123.8** 4 7/8	**2.4** 3/32	**M16** 5/8	**34.9** 1 3/8	**133.4** 5 1/4	**95.0** 3 3/4	**14.3** 9/16	**7.8** 17.3
55 mm	ESA-4BF-TRB-55MM	ESA-4BF-TRB-55MME											
2 1/4	ESA-4BF-TRB-2 1/4	ESA-4BF-TRB-2 1/4 E	**101.6** 4	**174.6** 6 7/8	**90.5** 3 9/16	**136.5** 5 3/8	**4.0** 5/32	**M16** 5/8	**38.1** 1 1/2	**149.2** 5 7/8	**103.2** 4 1/16	**14.3** 9/16	**10.5** 23.1
2 7/16	ESA-4BF-TRB-2 7/16	ESA-4BF-TRB-2 7/16 E											
2 1/2	ESA-4BF-TRB-2 1/2	ESA-4BF-TRB-2 1/2 E											
60 mm	ESA-4BF-TRB-60MM	ESA-4BF-TRB-60MME											
65 mm	ESA-4BF-TRB-65MM	ESA-4BF-TRB-65MME											

Continued on next page.

TYPE E SELF-ALIGNING (ESA) MOUNTED TAPERED ROLLER BEARING: FOUR-BOLT FLANGE BLOCK DOUBLE LOCKING COLLAR

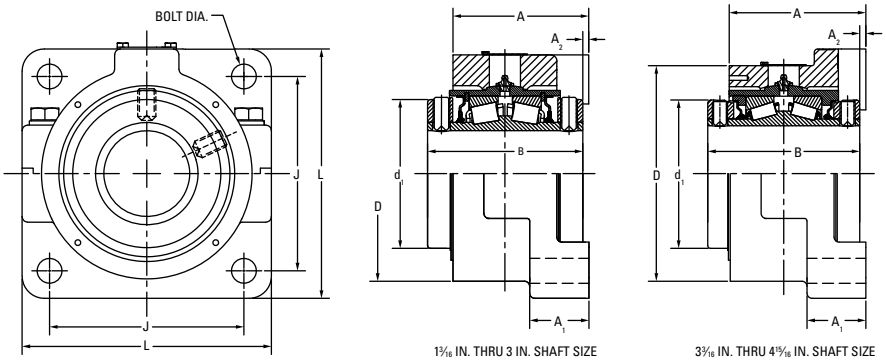

Shaft Dia.	Part No. Non-Expansion	Part No. Expansion	B	L	A	J	A_2	Bolt Dia	A_1	D	d_1	Expansion	Approx. Wt.
mm in.			**mm** in.	**mm** in.	**mm** in.	**mm** in.	**mm** in.	**mm** in.	**mm** in.	**mm** in.	**mm** in.	**mm** in.	**kg** lbs.
2 11/16	ESA-4BF-TRB-2 11/16	ESA-4BF-TRB-2 11/16 E											
2 3/4	ESA-4BF-TRB-2 3/4	ESA-4BF-TRB-2 3/4 E											
2 15/16	ESA-4BF-TRB-2 15/16	ESA-4BF-TRB-2 15/16 E	**114.3** 4 1/2	**196.9** 7 3/4	**100.0** 3 15/16	**152.4** 6	**5.6** 7/32	**M20** 3/4	**41.3** 1 5/8	**165.1** 6 1/2	**119.9** 4 23/32	**14.3** 9/16	**15.6** 34.5
3	ESA-4BF-TRB-3	ESA-4BF-TRB-3 E											
70 mm	ESA-4BF-TRB-70MM	ESA-4BF-TRB-70MME											
75 mm	ESA-4BF-TRB-75MM	ESA-4BF-TRB-75MME											
3 3/16	ESA-4BF-TRB-3 3/16	ESA-4BF-TRB-3 3/16 E											
3 1/4	ESA-4BF-TRB-3 1/4	ESA-4BF-TRB-3 1/4 E											
3 7/16	ESA-4BF-TRB-3 7/16	ESA-4BF-TRB-3 7/16 E											
3 1/2	ESA-4BF-TRB-3 1/2	ESA-4BF-TRB-3 1/2 E	**127.0** 5	**235.0** 9 1/4	**114.3** 4 1/2	**177.8** 7	**6.4** 1/4	**M20** 3/4	**47.6** 1 7/8	**203.2** 8	**140.5** 5 17/32	**14.3** 9/16	**25.5** 56.3
80 mm	ESA-4BF-TRB-80MM	ESA-4BF-TRB-80MME											
85 mm	ESA-4BF-TRB-85MM	ESA-4BF-TRB-85MME											
90 mm	ESA-4BF-TRB-90MM	ESA-4BF-TRB-90MME											
3 15/16	ESA-4BF-TRB-3 15/16	ESA-4BF-TRB-3 15/16 E											
4	ESA-4BF-TRB-4	ESA-4BF-TRB-4 E	**158.8** 6 1/4	**260.4** 10 1/4	**142.9** 5 5/8	**196.9** 7 3/4	**6.4** 1/4	**M24** 7/8	**54.0** 2 1/8	**225.4** 8 7/8	**154.0** 6 1/16	**14.3** 9/16	**38.2** 84.2
100 mm	ESA-4BF-TRB-100MM	ESA-4BF-TRB-100MME											
4 7/16	ESA-4BF-TRB-4 7/16	ESA-4BF-TRB-4 7/16 E											
4 1/2	ESA-4BF-TRB-4 1/2	ESA-4BF-TRB-4 1/2 E											
110 mm	ESA-4BF-TRB-110MM	ESA-4BF-TRB-110MME	**171.5** 6 3/4	**292.1** 11 1/2	**152.4** 6	**222.3** 8 3/4	**8.3** 21/64	**M24** 1	**66.7** 2 5/8	**247.7** 9 3/4	**171.1** 6 47/64	**14.3** 9/16	**51.6** 113.9
115 mm	ESA-4BF-TRB-115MM	ESA-4BF-TRB-115MME											

TYPE SAF 500 SELF-ALIGNING (SAFSA) MOUNTED TAPERED ROLLER BEARING: TWO-BOLT PILLOW BLOCK SINGLE LOCKING COLLAR

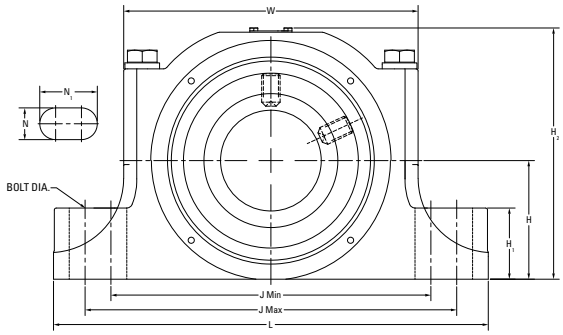

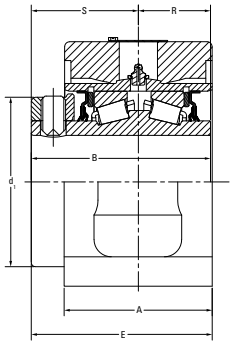

1 3/16 IN. THRU 3 IN. SHAFT SIZE

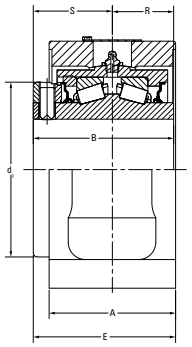

3 3/16 IN. THRU 3 1/2 IN. SHAFT SIZE

Shaft Dia.	Part No. Non-Expansion	Part No. Expansion	B	L	A	J min	J max	Bolt Dia.	E	N	N_1	H_1	H_2	d_1	H	W	S	R	Expansion	Approx. Wt.
mm in.			**mm** in.	**mm** in.	**mm** in.	**mm** in.	**mm** in.	**mm** in.	**mm** in.	**mm** in.	**mm** in.	**mm** in.	**mm** in.	**mm** in.	**mm** in.	**mm** in.	**mm** in.	**mm** in.	**mm** in.	**kg** lbs.
1 3/8	SAFSA-P2BA-TRB-1 3/8	SAFSA-P2BA-TRB-1 3/8 E																		
1 7/16	SAFSA-P2BA-TRB-1 7/16	SAFSA-P2BA-TRB-1 7/16 E	**64.3** 2 17/32	**203.2** 8	**55.6** 2 3/16	**158.8** 6 1/4	**177.8** 7	**M12** 1/2	**65.9** 2 19/32	**14.3** 9/16	**23.8** 15/16	**25.4** 1	**117.5** 4 5/8	**69.9** 2 3/4	**57.2** 2 1/4	**117.6** 4 5/8	**38.1** 1 1/2	**26.2** 1 1/32	**14.3** 9/16	**5.4** 11.8
35 mm	SAFSA-P2BA-TRB-35MM	SAFSA-P2BA-TRB-35MME																		
1 1/2	SAFSA-P2BA-TRB-1 1/2	SAFSA-P2BA-TRB-1 1/2 E																		
1 5/8	SAFSA-P2BA-TRB-1 5/8	SAFSA-P2BA-TRB-1 5/8 E	**72.2** 2 27/32	**209.6** 8 1/4	**60.2** 2 3/8	**158.8** 6 1/4	**177.8** 7	**M12** 1/2	**73.0** 2 7/8	**14.3** 9/16	**23.8** 15/16	**22.3** 7/8	**121.4** 4 25/32	**80.9** 3 3/16	**57.2** 2 1/4	**130.3** 5 1/8	**42.9** 1 11/16	**29.3** 1 5/32	**14.3** 9/16	**5.8** 12.7
40 mm	SAFSA-P2BA-TRB-40MM	SAFSA-P2BA-TRB-40MME																		
1 11/16	SAFSA-P2BA-TRB-1 11/16	SAFSA-P2BA-TRB-1 11/16 E	**72.2** 2 27/32	**209.6** 8 1/4	**64.3** 2 17/32	**158.8** 6 1/4	**177.8** 7	**M12** 1/2	**75.1** 2 61/64	**14.3** 9/16	**23.8** 15/16	**28.6** 1 1/8	**127.8** 5 1/32	**87.3** 3 7/16	**63.5** 2 1/2	**141.2** 5 9/16	**42.9** 1 11/16	**29.3** 1 5/32	**14.3** 9/16	**6.3** 13.9
1 3/4	SAFSA-P2BA-TRB-1 3/4	SAFSA-P2BA-TRB-1 3/4 E																		
1 7/8	SAFSA-P2BA-TRB-1 7/8	SAFSA-P2BA-TRB-1 7/8 E	**75.0** 2 61/64	**209.6** 8 1/4	**64.3** 2 17/32	**165.1** 6 1/2	**177.8** 7	**M12** 1/2	**76.7** 3 1/64	**14.3** 9/16	**20.7** 13/16	**28.6** 1 1/8	**132.6** 5 7/32	**87.1** 3 7/16	**63.5** 2 1/2	**141.2** 5 9/16	**44.5** 1 3/4	**30.5** 1 13/64	**14.3** 9/16	**7.1** 15.6
45 mm	SAFSA-P2BA-TRB-45MM	SAFSA-P2BA-TRB-45MME																		
1 15/16	SAFSA-P2BA-TRB-1 15/16	SAFSA-P2BA-TRB-1 15/16 E																		
2	SAFSA-P2BA-TRB-2	SAFSA-P2BA-TRB-2 E	**75.0** 2 61/64	**251.0** 9 7/8	**64.3** 2 17/32	**165.1** 6 1/2	**220.7** 8 11/16	**M16** 5/8	**76.7** 3 1/64	**17.5** 11/16	**46.0** 1 13/16	**28.6** 1 1/8	**138.9** 5 15/32	**87.3** 3 7/16	**69.9** 2 3/4	**141.2** 5 9/16	**44.5** 1 3/4	**30.5** 1 13/64	**14.3** 9/16	**7.9** 17.4
50 mm	SAFSA-P2BA-TRB-50MM	SAFSA-P2BA-TRB-50MME																		
2 3/16	SAFSA-P2BA-TRB-2 3/16	SAFSA-P2BA-TRB-2 3/16 E	**79.4** 3 1/8	**269.5** 10 5/8	**67.5** 2 21/32	**182.9** 7 3/16	**241.3** 9 1/2	**M16** 5/8	**81.3** 3 3/16	**17.5** 11/16	**46.7** 1 27/32	**27.8** 1 3/32	**150.0** 5 29/32	**95.3** 3 3/4	**76.2** 3	**152.4** 6	**47.6** 1 7/8	**31.4** 1 15/64	**14.3** 9/16	**8.7** 19.1
55 mm	SAFSA-P2BA-TRB-55MM	SAFSA-P2BA-TRB-55MME																		
2 1/4	SAFSA-P2BA-TRB-2 1/4	SAFSA-P2BA-TRB-2 1/4 E	**84.1** 3 5/16	**269.5** 10 5/8	**73.2** 2 7/8	**182.6** 7 3/16	**241.3** 9 1/2	**M16** 5/8	**87.4** 3 7/16	**17.5** 11/16	**46.8** 1 27/32	**35.0** 1 3/8	**160.3** 6 5/16	**103.2** 4 1/16	**76.2** 3	**162.7** 6 13/32	**50.8** 2	**33.3** 1 5/16	**14.3** 9/16	**10.8** 23.7
60 mm	SAFSA-P2BA-TRB-60MM	SAFSA-P2BA-TRB-60MME																		
2 7/16	SAFSA-P2BA-TRB-2 7/16	SAFSA-P2BA-TRB-2 7/16 E																		
2 1/2	SAFSA-P2BA-TRB-2 1/2	SAFSA-P2BA-TRB-2 1/2 E	**84.1** 3 5/16	**276.4** 10 7/8	**73.2** 2 7/8	**200.2** 7 7/8	**244.6** 9 5/8	**M16** 5/8	**87.4** 3 7/16	**17.5** 11/16	**39.7** 1 9/16	**35.0** 1 3/8	**166.7** 6 9/16	**103.2** 4 1/16	**82.6** 3 1/4	**162.7** 6 13/32	**50.8** 2	**33.3** 1 5/16	**14.3** 9/16	**11.8** 25.9
65 mm	SAFSA-P2BA-TRB-65MM	SAFSA-P2BA-TRB-65MME																		
2 11/16	SAFSA-P2BA-TRB-2 11/16	SAFSA-P2BA-TRB-2 11/16 E																		
2 3/4	SAFSA-P2BA-TRB-2 3/4	SAFSA-P2BA-TRB-2 3/4 E	**93.7** 3 11/16	**315.2** 12 13/32	**84.3** 3 5/16	**228.6** 9	**279.4** 11	**M20** 3/4	**99.4** 3 29/32	**21.0** 13/16	**46.4** 1 13/16	**28.6** 1 1/8	**181.0** 7 1/8	**119.9** 4 23/32	**88.9** 3 1/2	**190.5** 7 1/2	**57.2** 2 1/4	**36.5** 1 7/16	**14.3** 9/16	**15.6** 34.3
70 mm	SAFSA-P2BA-TRB-70MM	SAFSA-P2BA-TRB-70MME																		

Continued on next page.

TYPE SAF 500 SELF-ALIGNING (SAFSA) MOUNTED TAPERED ROLLER BEARING: TWO-BOLT PILLOW BLOCK SINGLE LOCKING COLLAR

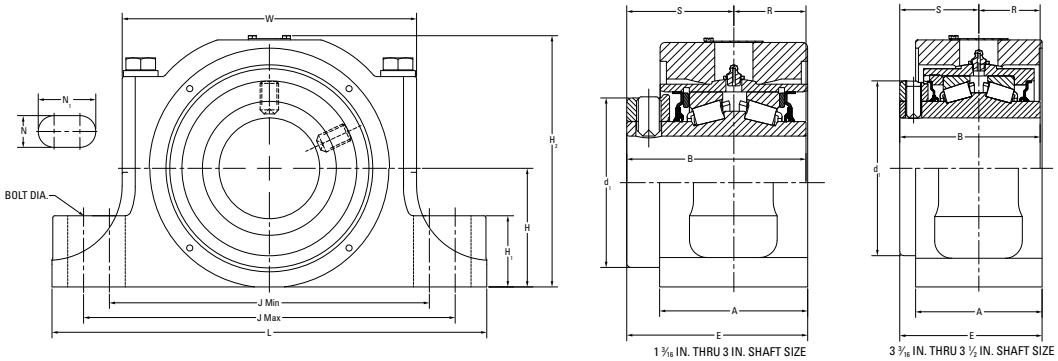

Shaft Dia.	Part No. Non-Expansion	Part No. Expansion	B	L	A	J min	J max	Bolt Dia.	E	N	N_1	H_1	H_2	d_1	H	W	S	R	Expansion	Approx. Wt.
mm in.			**mm** in.	**mm** in.	**mm** in.	**mm** in.	**mm** in.	**mm** in.	**mm** in.	**mm** in.	**mm** in.	**mm** in.	**mm** in.	**mm** in.	**mm** in.	**mm** in.	**mm** in.	**mm** in.	**mm** in.	**kg** lbs.
2 15/16	SAFSA-P2BA-TRB-2 15/16	SAFSA-P2BA-TRB-2 15/16 E																		
3	SAFSA-P2BA-TRB-3	SAFSA-P2BA-TRB-3 E	**93.7** 3 11/16	**315.2** 12 7/16	**84.3** 3 5/16	**228.6** 9	**279.4** 11	**M20** 3/4	**99.4** 3 29/32	**21.0** 13/16	**46.4** 1 13/16	**35.0** 1 3/8	**187.3** 7 3/8	**119.9** 4 23/32	**95.3** 3 3/4	**190.5** 7 1/2	**57.2** 2 1/4	**36.5** 1 7/16	**14.3** 9/16	**15.3** 33.6
75 mm	SAFSA-P2BA-TRB-75MM	SAFSA-P2BA-TRB-75MME																		
3 3/16	SAFSA-P2BA-TRB-3 3/16	SAFSA-P2BA-TRB-3 3/16 E																		
3 1/4	SAFSA-P2BA-TRB-3 1/4	SAFSA-P2BA-TRB-3 1/4 E	**106.4** 4 3/16	**346.2** 13 5/8	**101.6** 4	**254.0** 10	**298.5** 11 3/4	**M20** 3/4	**114.3** 4 1/2	**21.0** 13/16	**43.2** 1 11/16	**40.5** 1 19/32	**208.0** 8 3/16	**140.5** 5 17/32	**101.6** 4	**236.5** 9 5/16	**63.5** 2 1/2	**42.9** 1 11/16	**14.3** 9/16	**22** 48.4
80 mm	SAFSA-P2BA-TRB-80MM	SAFSA-P2BA-TRB-80MME																		
85 mm	SAFSA-P2BA-TRB-85MM	SAFSA-P2BA-TRB-85MME																		
3 7/16	SAFSA-P2BA-TRB-3 7/16	SAFSA-P2BA-TRB-3 7/16 E																		
3 1/2	SAFSA-P2BA-TRB-3 1/2	SAFSA-P2BA-TRB-3 1/2 E	**106.4** 4 3/16	**374.7** 14 3/4	**101.6** 4	**276.4** 10 7/8	**333.5** 13 1/8	**M24** 7/8	**114.3** 4 1/2	**25.4** 1	**54.0** 2 1/8	**38.7** 1 17/32	**220.7** 8 11/16	**140.5** 5 17/32	**114.3** 4 1/2	**236.5** 9 5/16	**63.5** 2 1/2	**42.9** 1 11/16	**14.3** 9/16	**25.6** 56.2
90 mm	SAFSA-P2BA-TRB-90MM	SAFSA-P2BA-TRB-90MME																		
3 15/16	SAFSA-P2BA-TRB-3 15/16	SAFSA-P2BA-TRB-3 15/16 E																		
4	SAFSA-P2BA-TRB-4	SAFSA-P2BA-TRB-4 E	**133.4** 5 1/4	**406.4** 16	**120.7** 4 3/4	**317.5** 12 1/2	**368.3** 14 1/2	**M24** 7/8	**139.8** 5 1/2	**25.4** 1	**50.8** 2	**50.8** 2	**240.5** 9 15/32	**154.0** 6 1/16	**125.4** 4 15/16	**256.4** 10 3/32	**79.4** 3 1/8	**54.0** 2 1/8	**14.3** 9/16	**34.0** 74.8
100 mm	SAFSA-P2BA-TRB-100MM	SAFSA-P2BA-TRB-100MME																		
4 7/16	SAFSA-P2BA-TRB-4 7/16	SAFSA-P2BA-TRB-4 7/16 E																		
4 1/2	SAFSA-P2BA-TRB-4 1/2	SAFSA-P2BA-TRB-4 1/2 E	**142.9** 5 5/8	**444.5** 17 1/2	**129.4** 5 3/32	**362.0** 14 1/4	**400.1** 15 3/4	**M24** 1	**150.4** 5 59/64	**28.6** 1 1/8	**47.6** 1 7/8	**55.6** 2 3/16	**279.4** 11	**171.1** 6 47/64	**152.4** 6	**281.8** 11 3/32	**85.7** 3 3/8	**57.2** 2 1/4	**14.3** 9/16	**52.4** 115.4
110 mm	SAFSA-P2BA-TRB-110MM	SAFSA-P2BA-TRB-110MME																		
115 mm	SAFSA-P2BA-TRB-115MM	SAFSA-P2BA-TRB-115MM																		
4 15/16	SAFSA-P2BA-TRB-4 15/16	SAFSA-P2BA-TRB-4 15/16 E																		
5	SAFSA-P2BA-TRB-5	SAFSA-P2BA-TRB-5 E	**158.0** 6 7/32	**499.9** 19 11/16	**143.7** 5 21/32	**384.3** 15 1/8	**441.5** 17 3/8	**M26** 1 1/4	**137.8** 5 27/64	**28.6** 1 9/16	**61.9** 2 7/16	**55.6** 2 3/16	**300.0** 11 13/16	**196.9** 7 3/4	**152.4** 6	**323.1** 12 23/32	**65.9** 2 19/32	**97.8** 3 55/64	**14.3** 9/16	**66.7** 146.8
125 mm	SAFSA-P2BA-TRB-125MM	SAFSA-P2BA-TRB-125MME																		

TYPE SAF 500 SELF-ALIGNING (SAFSA) MOUNTED TAPERED ROLLER BEARING: TWO-BOLT PILLOW BLOCK DOUBLE LOCKING COLLAR

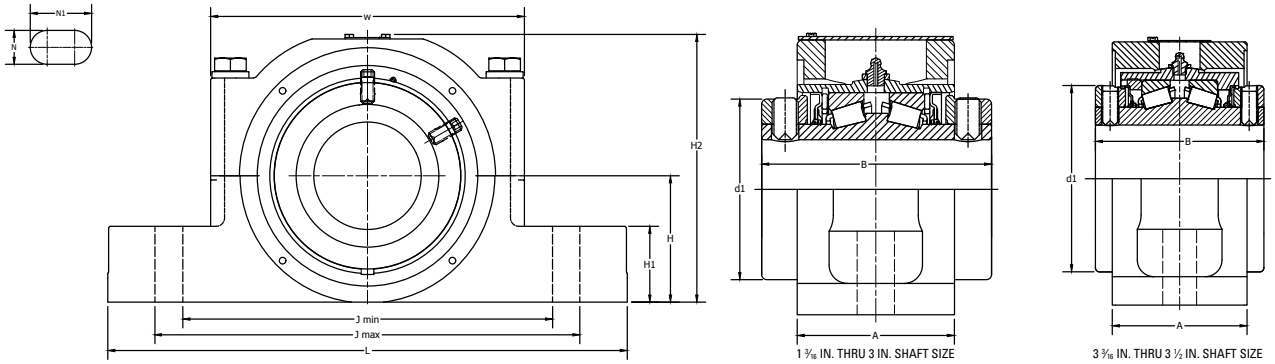

Shaft Dia.	Part No. Non-Expansion	Part No. Expansion	B	L	A	J min	J max	Bolt Dia.	N	N_1	H_1	H_2	d_1	H	W	Expansion	Approx. Wt.
mm in.			**mm** in.	**mm** in.	**mm** in.	**mm** in.	**mm** in.	**mm** in.	**mm** in.	**mm** in.	**mm** in.	**mm** in.	**mm** in.	**mm** in.	**mm** in.	**mm** in.	**kg** lbs.
1 3/8	SAFSA-P2B-TRB-1 3/8	SAFSA-P2B-TRB-1 3/8 E															
1 7/16	SAFSA-P2B-TRB-1 7/16	SAFSA-P2B-TRB-1 7/16 E	**76.2** 3	**204.8** 8 1/16	**55.6** 2 3/16	**150.0** 5 29/32	**177.8** 7	**M12** 1/2	**14.3** 9/16	**28.2** 1 7/64	**25.8** 1	**117.5** 4 5/8	**69.9** 2 3/4	**57.2** 2 1/4	**117.6** 4 5/8	**14.2** 9/16	**5.2** 11.4
35 mm	SAFSA-P2B-TRB-35MM	SAFSA-P2B-TRB-35MME															
1 1/2	SAFSA-P2B-TRB-1 1/2	SAFSA-P2B-TRB-1 1/2 E															
1 5/8	SAFSA-P2B-TRB-1 5/8	SAFSA-P2B-TRB-1 5/8 E	**85.9** 3 3/8	**205.2** 8 5/64	**60.2** 2 3/8	**155.2** 6 7/64	**177.8** 7	**M12** 1/2	**14.3** 9/16	**25.8** 1 1/64	**22.6** 7/8	**121.4** 4 25/32	**80.9** 3 3/16	**57.2** 2 1/4	**130.3** 5 1/8	**14.2** 9/16	**5.3** 11.7
40 mm	SAFSA-P2B-TRB-40MM	SAFSA-P2B-TRB-40MME															
1 11/16	SAFSA-P2B-TRB-1 11/16	SAFSA-P2B-TRB-1 11/16 E	**88.9** 3 1/2	**228.6** 9	**64.3** 2 17/32	**165.1** 6 1/2	**193.7** 7 5/8	**M12** 1/2	**14.3** 9/16	**29.0** 1 9/64	**29.0** 1 1/8	**127.8** 5 1/32	**87.3** 3 7/16	**63.5** 2 1/2	**141.2** 5 9/16	**14.2** 9/16	**5.7** 12.5
1 3/4	SAFSA-P2B-TRB-1 3/4	SAFSA-P2B-TRB-1 3/4 E															
1 7/8	SAFSA-P2B-TRB-1 7/8	SAFSA-P2B-TRB-1 7/8 E	**88.9** 3 1/2	**254.0** 10	**64.3** 2 17/32	**160.0** 6 9/64	**214.3** 8 7/16	**M12** 1/2	**14.3** 9/16	**41.28** 1 5/8	**28.2** 1 1/8	**127.8** 5 1/32	**87.3** 3 7/16	**63.5** 2 1/2	**141.2** 5 9/16	**14.2** 9/16	**6.4** 14.1
45 mm	SAFSA-P2B-TRB-45MM	SAFSA-P2B-TRB-45MME															
1 15/16	SAFSA-P2B-TRB-1 15/16	SAFSA-P2B-TRB-1 15/16 E															
2	SAFSA-P2B-TRB-2	SAFSA-P2B-TRB-2 E	**88.9** 3 1/2	**254.0** 10	**64.3** 2 17/32	**165.1** 6 1/2	**221.1** 8 45/64	**M16** 5/8	**17.5** 11/16	**45.6** 1 51/64	**28.6** 1 1/8	**137.2** 5 27/64	**87.3** 3 7/16	**69.9** 2 3/4	**141.2** 5 9/16	**14.2** 9/16	**7.1** 15.7
50 mm	SAFSA-P2B-TRB-50MM	SAFSA-P2B-TRB-50MME															
2 3/16	SAFSA-P2B-TRB-2 3/16	SAFSA-P2B-TRB-2 3/16 E	**95.3** 3 3/4	**273.1** 10 3/4	**67.3** 2 21/32	**177.8** 7	**241.3** 9 1/2	**M16** 5/8	**17.5** 11/16	**49.2** 1 15/16	**27.9** 1 3/32	**150.0** 5 29/32	**95.3** 3 3/4	**76.2** 3	**152.4** 6	**14.2** 9/16	**7.9** 17.5
55 mm	SAFSA-P2B-TRB-55MM	SAFSA-P2B-TRB-55MME															
2 1/4	SAFSA-P2B-TRB-2 1/4	SAFSA-P2B-TRB-2 1/4 E	**101.6** 4	**275.0** 10 53/64	**73.2** 2 7/8	**183.0** 7 13/64	**244.5** 9 5/8	**M16** 5/8	**17.5** 11/16	**48.4** 1 29/32	**35.1** 1 3/8	**160.3** 6 5/16	**103.2** 4 1/16	**76.2** 3	**162.7** 6 13/32	**14.2** 9/16	**9.4** 20.8
60 mm	SAFSA-P2B-TRB-60MM	SAFSA-P2B-TRB-60MME															
2 7/16	SAFSA-P2B-TRB-2 7/16	SAFSA-P2B-TRB-2 7/16 E															
2 1/2	SAFSA-P2B-TRB-2 1/2	SAFSA-P2B-TRB-2 1/2 E	**101.6** 4	**304.8** 12	**73.2** 2 7/8	**200.0** 7 7/8	**260.4** 10 1/4	**M16** 5/8	**17.5** 11/16	**47.6** 1 7/8	**35.1** 1 3/8	**169.1** 6 21/32	**103.2** 4 1/16	**82.6** 3 1/4	**162.7** 6 13/32	**14.2** 9/16	**10.2** 22.4
65 mm	SAFSA-P2B-TRB-65MM	SAFSA-P2B-TRB-65MME															

Continued on next page.

TYPE SAF 500 SELF-ALIGNING (SAFSA) MOUNTED TAPERED ROLLER BEARING: TWO-BOLT PILLOW BLOCK DOUBLE LOCKING COLLAR

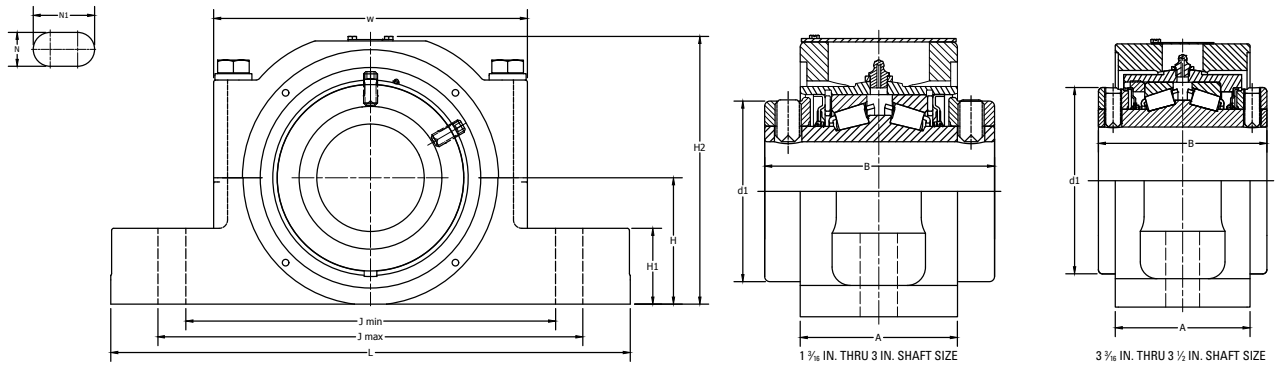

Shaft Dia.	Part No. Non-Expansion	Part No. Expansion	B	L	A	J min	J max	Bolt Dia.	N	N_1	H_1	H_2	d_1	H	W	Expansion	Approx. Wt.
mm in.			**mm** in.	**mm** in.	**mm** in.	**mm** in.	**mm** in.	**mm** in.	**mm** in.	**mm** in.	**mm** in.	**mm** in.	**mm** in.	**mm** in.	**mm** in.	**mm** in.	**kg** lbs.
2 11/16	SAFSA-P2B-TRB-2 11/16	SAFSA-P2B-TRB-2 11/16 E															
2 3/4	SAFSA-P2B-TRB-2 3/4	SAFSA-P2B-TRB-2 3/4 E	**114.3** 4 1/2	**315.1** 12 13/32	**84.3** 3 5/16	**228.6** 9	**279.4** 11	**M20** 3/4	**21.0** 53/64	**46.4** 1 53/64	**28.6** 1 1/8	**181.0** 7 1/8	**119.9** 4 23/32	**88.9** 3 1/2	**190.5** 7 1/2	**14.2** 9/16	**14.0** 30.8
70 mm	SAFSA-P2B-TRB-70MM	SAFSA-P2B-TRB-70MME															
2 15/16	SAFSA-P2B-TRB-2 15/16	SAFSA-P2B-TRB-2 15/16 E															
3	SAFSA-P2B-TRB-3	SAFSA-P2B-TRB-3 E	**114.3** 4 1/2	**341.3** 13 7/16	**84.3** 3 5/16	**241.3** 9 1/2	**292.1** 11 1/2	**M20** 3/4	**21.0** 53/64	**46.4** 1 53/64	**34.9** 1 3/8	**187.3** 7 3/8	**119.9** 4 23/32	**95.3** 3 3/4	**190.5** 7 1/2	**14.2** 9/16	**14.2** 31.6
75 mm	SAFSA-P2B-TRB-75MM	SAFSA-P2B-TRB-75MME															
3 3/16	SAFSA-P2B-TRB-3 3/16	SAFSA-P2B-TRB-3 3/16 E															
3 1/4	SAFSA-P2B-TRB-3 1/4	SAFSA-P2B-TRB-3 1/4 E	**127.3** 5	**344.8** 13 37/64	**101.6** 4	**254.0** 10	**298.5** 11 3/4	**M20** 3/4	**21.0** 53/64	**43.3** 1 45/64	**40.4** 1 19/32	**208.0** 8 3/16	**140.5** 5 17/32	**101.6** 4	**236.5** 9 5/16	**14.2** 9/16	**20.2** 44.6
80 mm	SAFSA-P2B-TRB-80MM	SAFSA-P2B-TRB-80MME															
85 mm	SAFSA-P2B-TRB-85MM	SAFSA-P2B-TRB-85MME															
3 7/16	SAFSA-P2B-TRB-3 7/16	SAFSA-P2B-TRB-3 7/16 E															
3 1/2	SAFSA-P2B-TRB-3 1/2	SAFSA-P2B-TRB-3 1/2 E	**127.3** 5	**406.4** 16	**101.6** 4	**276.2** 10 7/8	**350.8** 13 13/16	**M24** 7/8	**25.4** 1	**62.7** 2 15/32	**38.9** 1 15/32	**220.7** 8 11/16	**140.5** 5 17/32	**114.3** 4 1/2	**236.5** 9 5/16	**14.2** 9/16	**21.7** 47.9
90 mm	SAFSA-P2B-TRB-90MM	SAFSA-P2B-TRB-90MME															
3 15/16	SAFSA-P2B-TRB-3 15/16	SAFSA-P2B-TRB-3 15/16 E															
4	SAFSA-P2B-TRB-4	SAFSA-P2B-TRB-4 E	**158.8** 6 1/4	**419.1** 16 1/2	**120.7** 4 3/4	**313.9** 12 23/64	**374.7** 14 3/4	**M24** 7/8	**25.4** 1	**55.6** 2 3/16	**50.8** 2	**237.3** 9 11/32	**154.0** 6 1/16	**125.4** 4 15/16	**256.4** 10 3/32	**14.2** 9/16	**32.3** 71.1
100 mm	SAFSA-P2B-TRB-100MM	SAFSA-P2B-TRB-100MME															
4 7/16	SAFSA-P2B-TRB-4 7/16	SAFSA-P2B-TRB-4 7/16 E															
4 1/2	SAFSA-P2B-TRB-4 1/2	SAFSA-P2B-TRB-4 1/2 E	**171.5** 6 3/4	**466.7** 18 3/8	**129.4** 5 3/32	**362.0** 14 1/4	**412.8** 16 1/4	**M24** 7/8	**27.0** 1 1/16	**52.4** 2 1/16	**50.8** 2	**279.4** 11	**171.1** 6 47/64	**152.4** 6	**281.8** 11 3/32	**14.2** 9/16	**46.2** 101.9
110 mm	SAFSA-P2B-TRB-110MM	SAFSA-P2B-TRB-110MME															
115 mm	SAFSA-P2B-TRB-115MM	SAFSA-P2B-TRB-115MME															
4 15/16	SAFSA-P2B-TRB-4 15/16	SAFSA-P2B-TRB-4 15/16 E															
5	SAFSA-P2B-TRB-5	SAFSA-P2B-TRB-5 E	**184.2** 7 1/4	**520.7** 20 1/2	**143.7** 5 21/32	**384.2** 15 1/8	**458.8** 18 1/16	**M30** 1 1/4	**33.3** 1 5/16	**70.6** 2 25/32	**50.8** 2	**300.8** 11 27/32	**196.9** 7 3/4	**152.4** 6	**323.1** 12 23/32	**14.2** 9/16	**58.3** 128.6
125 mm	SAFSA-P2B-TRB-125MM	SAFSA-P2B-TRB-125MME															

TYPE SAF 500 SELF-ALIGNING (SAFSA) MOUNTED TAPERED ROLLER BEARING: FOUR-BOLT PILLOW BLOCK SINGLE LOCKING COLLAR

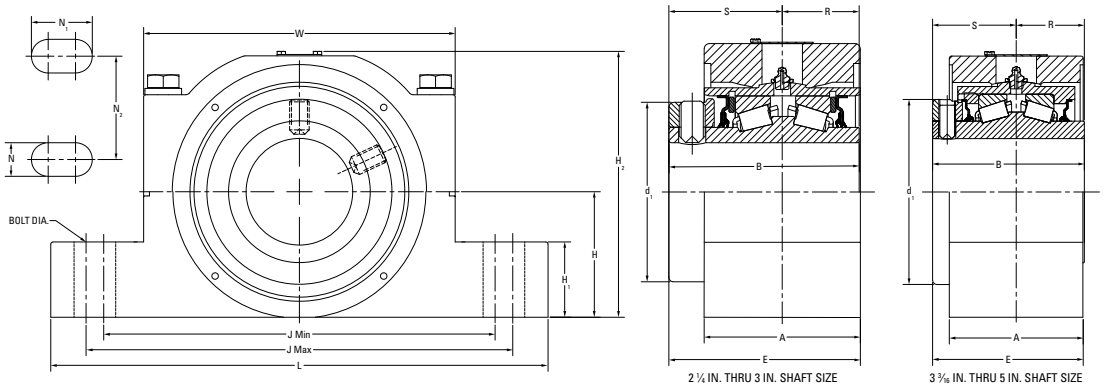

Shaft Dia.	Part No. Non-Expansion	Part No. Expansion	B	L	A	J min	J max	Bolt Dia.	E	N	N_1	N_2	H_1	H_2	d_1	H	W	S	R	Expansion	Approx. Wt.
mm in.			**mm** in.	**mm** in.	**mm** in.	**mm** in.	**mm** in.	**mm** in.	**mm** in.	**mm** in.	**mm** in.	**mm** in.	**mm** in.	**mm** in.	**mm** in.	**mm** in.	**mm** in.	**mm** in.	**mm** in.	**mm** in.	**kg** lbs.
2 ¼	SAFSA-P4BA-TRB-2 ¼	SAFSA-P4BA-TRB-2 ¼ E	**84.1** 3 5/16	**261.9** 10 5/16	**88.9** 3 ½	**190.5** 7 ½	**217.5** 8 9/16	**M12** ½	**95.3** 3 ¾	**14.3** 9/16	**27.8** 1 3/32	**50.8** 2	**34.9** 1 3/8	**160.2** 6 5/16	**103.2** 4 1/16	**76.2** 3	**162.7** 6 13/32	**50.8** 2	**33.3** 1 5/16	**14.3** 9/16	**12.3** 27.1
60 mm	SAFSA-P4BA-TRB-60MM	SAFSA-P4BA-TRB-60MME																			
2 7/16	SAFSA-P4BA-TRB-2 7/16	SAFSA-P4BA-TRB-2 7/16 E																			
2 ½	SAFSA-P4BA-TRB-2 ½	SAFSA-P4BA-TRB-2 ½ E	**84.1** 3 5/16	**276.3** 10 7/8	**88.9** 3 ½	**201.6** 7 15/16	**246** 9 11/16	**M16** ⅝	**95.3** 3 ¾	**17.5** 11/16	**39.8** 1 9/16	**47.8** 1 7/8	**41.3** 1 5/8	**166.5** 6 9/16	**103.1** 4 1/16	**82.6** 3 ¼	**162.8** 6 13/32	**50.8** 2	**33.3** 1 5/16	**14.3** 9/16	**12.3** 27.1
65 mm	SAFSA-P4BA-TRB-65MM	SAFSA-P4BA-TRB-65MME																			
2 11/16	SAFSA-P4BA-TRB-2 11/16	SAFSA-P4BA-TRB-2 11/16 E																			
2 ¾	SAFSA-P4BA-TRB-2 ¾	SAFSA-P4BA-TRB-2 ¾ E	**93.7** 3 11/16	**315.1** 12 13/32	**95.3** 3 ¾	**228.6** 9	**279.4** 11	**M16** ⅝	**104.9** 4 ⅛	**17.5** 11/16	**42.9** 1 11/16	**54.1** 2 ⅛	**41.3** 1 5/8	**180.7** 7 ⅛	**119.9** 4 23/32	**88.9** 3 ½	**190.5** 7 ½	**57.2** 2 ¼	**36.5** 1 7/16	**14.3** 9/16	**16.6** 36.4
70 mm	SAFSA-P4BA-TRB-70MM	SAFSA-P4BA-TRB-70MME																			
2 15/16	SAFSA-P4BA-TRB-2 15/16	SAFSA-P4BA-TRB-2 15/16 E																			
3	SAFSA-P4BA-TRB-3	SAFSA-P4BA-TRB-3 E	**93.7** 3 11/16	**320.7** 12 5/8	**95.3** 3 ¾	**239.7** 9 7/16	**287.3** 11 5/16	**M16** ⅝	**104.9** 4 ⅛	**17.5** 11/16	**41.3** 1 5/8	**54.1** 2 ⅛	**47.6** 1 7/8	**187.1** 7 3/8	**119.9** 4 23/32	**95.3** 3 ¾	**190.5** 7 ½	**57.2** 2 ¼	**36.5** 1 7/16	**14.3** 9/16	**18.2** 40.0
75 mm	SAFSA-P4BA-TRB-75MM	SAFSA-P4BA-TRB-75MME																			
3 3/16	SAFSA-P4BA-TRB-3 3/16	SAFSA-P4BA-TRB-3 3/16 E																			
3 ¼	SAFSA-P4BA-TRB-3 ¼	SAFSA-P4BA-TRB-3 ¼ E	**106.4** 4 3/16	**345.3** 13 19/32	**114.3** 4 ½	**266.7** 10 ½	**298.5** 11 ¾	**M16** ⅝	**120.7** 4 ¾	**17.5** 11/16	**33.4** 1 5/16	**54.1** 2 ⅛	**46.8** 1 27/32	**208.2** 8 3/16	**140.5** 5 17/32	**101.6** 4	**236.5** 9 5/16	**63.5** 2 ½	**42.9** 1 11/16	**14.3** 9/16	**26.3** 57.7
80 mm	SAFSA-P4BA-TRB-80MM	SAFSA-P4BA-TRB-80MME																			

Continued on next page.

TYPE SAF 500 SELF-ALIGNING (SAFSA) MOUNTED TAPERED ROLLER BEARING: FOUR-BOLT PILLOW BLOCK SINGLE LOCKING COLLAR

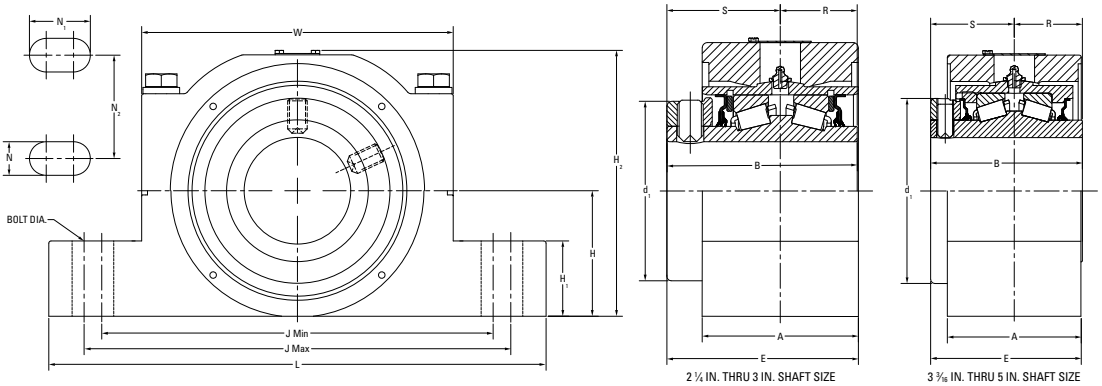

Shaft Dia.	Part No. Non-Expansion	Part No. Expansion	B	L	A	J min	J max	Bolt Dia.	E	N	N_1	N_2	H_1	H_2	d_1	H	W	S	R	Expansion	Approx. Wt.
mm in.			**mm** in.	**mm** in.	**mm** in.	**mm** in.	**mm** in.	**mm** in.	**mm** in.	**mm** in.	**mm** in.	**mm** in.	**mm** in.	**mm** in.	**mm** in.	**mm** in.	**mm** in.	**mm** in.	**mm** in.	**mm** in.	**kg** lbs.
3 7/16	SAFSA-P4BA-TRB-3 7/16	SAFSA-P4BA-TRB-3 7/16 E																			
3 1/2	SAFSA-P4BA-TRB-3 1/2	SAFSA-P4BA-TRB-3 1/2 E	**106.4** 4 3/16	**381.0** 15	**114.3** 4 1/2	**276.2** 10 7/8	**339.7** 13 3/8	**M20** 3/4	**120.7** 4 3/4	**21.0** 13/16	**52.8** 2 1/16	**60.5** 2 3/8	**50.8** 2	**220.9** 8 11/16	**140.5** 5 17/32	**114.3** 4 1/2	**236.5** 9 5/16	**63.5** 2 1/2	**42.9** 1 11/16	**14.3** 9/16	**27.9** 61.2
90 mm	SAFSA-P4BA-TRB-90MM	SAFSA-P4BA-TRB-90MME																			
3 15/16	SAFSA-P4BA-TRB-3 15/16	SAFSA-P4BA-TRB-3 15/16 E																			
4	SAFSA-P4BA-TRB-4	SAFSA-P4BA-TRB-4 E	**133.4** 5 1/4	**406.4** 16	**120.7** 4 3/4	**301.6** 11 7/8	**368.3** 14 1/2	**M20** 3/4	**139.8** 5 1/2	**21.0** 13/16	**54.3** 2 1/8	**69.9** 2 3/4	**50.8** 2	**240.7** 9 15/32	**154.0** 6 1/16	**125.5** 4 15/16	**256.4** 10 3/32	**79.4** 3 1/8	**54.0** 2 1/8	**14.3** 9/16	**34.0** 74.8
100 mm	SAFSA-P4BA-TRB-100MM	SAFSA-P4BA-TRB-100MME																			
110 mm	SAFSA-P4BA-TRB-110MM	SAFSA-P4BA-TRB-110MME	**142.9** 5 5/8	**409.6** 16 1/8	**120.7** 4 3/4	**330.2** 13	**368.3** 14 1/2	**M20** 3/4	**150.9** 5 29/32	**21** 13/16	**40.0** 1 9/16	**69.9** 2 3/4	**50.8** 2	**260.6** 10 1/4	**154.0** 6 1/16	**133.4** 5 1/4	**281.8** 11 3/32	**79.4** 3 1/8	**63.5** 2 1/2	**14.3** 9/16	**50.0** 110
4 7/16	SAFSA-P4BA-TRB-4 7/16	SAFSA-P4BA-TRB-4 7/16 E																			
4 1/2	SAFSA-P4BA-TRB-4 1/2	SAFSA-P4BA-TRB-4 1/2 E	**142.9** 5 5/8	**444.5** 17 1/2	**129.4** 5 3/32	**362.0** 14 1/4	**406.4** 16	**M24** 7/8	**150.4** 5 59/64	**25.4** 1	**47.6** 1 7/8	**82.6** 3 1/4	**57.2** 2 1/4	**279.8** 11	**171.1** 6 47/64	**152.4** 6	**281.8** 11 3/32	**85.7** 3 3/8	**57.2** 2 1/4	**14.3** 9/16	**50.0** 110
115 mm	SAFSA-P4BA-TRB-115MM	SAFSA-P4BA-TRB-115MME																			
4 15/16	SAFSA-P4BA-TRB-4 15/16	SAFSA-P4BA-TRB-4 15/16 E																			
5	SAFSA-P4BA-TRB-5	SAFSA-P4BA-TRB-5 E	**158.0** 6 7/32	**500.0** 19 11/16	**143.7** 5 21/32	**406.4** 16	**435.0** 17 1/8	**M24** 1	**137.7** 5 27/64	**26.2** 1 1/32	**40.5** 1 19/32	**85.9** 3 3/8	**50.8** 2	**300.6** 11 27/32	**196.9** 7 3/4	**152.4** 6	**323.1** 12 23/32	**65.9** 2 19/32	**97.8** 3 55/64	**14.3** 9/16	**64.0** 140.8
125 mm	SAFSA-P4BA-TRB-125MM	SAFSA-P4BA-TRB-125MME																			

TYPE SAF 500 SELF-ALIGNING (SAFSA) MOUNTED TAPERED ROLLER BEARING: FOUR-BOLT PILLOW BLOCK DOUBLE LOCKING COLLAR

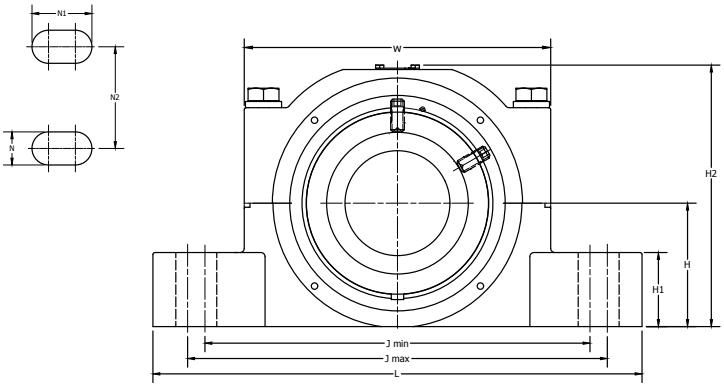

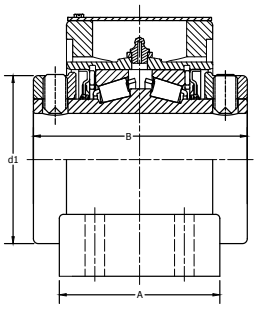

2 ¼ IN. THRU 3 IN. SHAFT SIZE

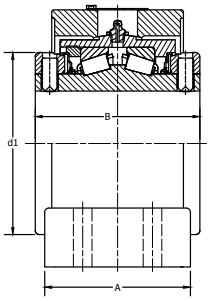

3 3/16 IN. THRU 5 IN. SHAFT SIZE

Shaft Dia.	Part No. Non-Expansion	Part No. Expansion	B	L	A	J min	J max	Bolt Dia.	N	N_1	N_2	H_1	H_2	d_1	H	W	Expansion	Approx. Wt.
mm in.			**mm** in.	**mm** in.	**mm** in.	**mm** in.	**mm** in.	**mm** in.	**mm** in.	**mm** in.	**mm** in.	**mm** in.	**mm** in.	**mm** in.	**mm** in.	**mm** in.	**mm** in.	**kg** lbs.
2 ¼	SAFSA-P4B-TRB-2 ¼	SAFSA-P4B-TRB-2 ¼ E	**101.6** 4	**261.9** 10 5/16	**88.9** 3 ½	**190.5** 7 ½	**217.5** 8 9/16	**M12** ½	**14.3** 9/16	**27.8** 1 3/32	**50.8** 2	**35.1** 1 3/8	**160.2** 6 5/16	**103.2** 4 1/16	**76.2** 3	**162.7** 6 13/32	**14.2** 9/16	**10.5** 23.1
60 mm	SAFSA-P4B-TRB-60MM	SAFSA-P4B-TRB-60MME																
2 7/16	SAFSA-P4B-TRB-2 7/16	SAFSA-P4B-TRB-2 7/16 E																
2 ½	SAFSA-P4B-TRB-2 ½	SAFSA-P4B-TRB-2 ½ E	**101.6** 4	**276.3** 10 7/8	**88.9** 3 ½	**201.6** 7 15/16	**246.0** 9 11/16	**M16** ⅝	**17.5** 11/16	**39.8** 1 9/16	**47.8** 1 7/8	**41.4** 1 5/8	**166.5** 6 9/16	**103.1** 4 1/16	**82.6** 3 ¼	**162.8** 6 13/32	**14.2** 9/16	**11.2** 24.6
65 mm	SAFSA-P4B-TRB-65MM	SAFSA-P4B-TRB-65MME																
2 11/16	SAFSA-P4B-TRB-2 11/16	SAFSA-P4B-TRB-2 11/16 E																
2 ¾	SAFSA-P4B-TRB-2 ¾	SAFSA-P4B-TRB-2 ¾ E	**114.3** 4 ½	**315.1** 12 13/32	**95.3** 3 ¾	**228.6** 9	**279.4** 11	**M16** ⅝	**17.5** 11/16	**42.9** 1 11/16	**54.1** 2 1/8	**41.7** 1 5/8	**180.7** 7 1/8	**119.9** 4 23/32	**88.9** 3 ½	**190.5** 7 ½	**14.2** 9/16	**15.0** 33.1
70 mm	SAFSA-P4B-TRB-70MM	SAFSA-P4B-TRB-70MME																
2 15/16	SAFSA-P4B-TRB-2 15/16	SAFSA-P4B-TRB-2 15/16 E																
3	SAFSA-P4B-TRB-3	SAFSA-P4B-TRB-3 E	**114.3** 4 ½	**320.7** 12 5/8	**95.3** 3 ¾	**239.7** 9 7/16	**287.3** 11 5/16	**M16** ⅝	**17.5** 11/16	**41.3** 1 5/8	**54.1** 2 1/8	**48.0** 1 7/8	**187.1** 7 3/8	**119.9** 4 23/32	**95.3** 3 ¾	**190.5** 7 ½	**14.2** 9/16	**16.0** 34.6
75 mm	SAFSA-P4B-TRB-75MM	SAFSA-P4B-TRB-75MME																
3 3/16	SAFSA-P4B-TRB-3 3/16	SAFSA-P4B-TRB-3 3/16 E																
3 ¼	SAFSA-P4B-TRB-3 ¼	SAFSA-P4B-TRB-3 ¼ E	**127.0** 5	**345.3** 13 19/32	**114.3** 4 ½	**266.7** 10 ½	**298.5** 11 ¾	**M16** ⅝	**17.5** 11/16	**33.4** 1 5/16	**54.1** 2 1/8	**40.4** 1 19/32	**208.2** 8 3/16	**140.5** 5 17/32	**101.6** 4	**236.5** 9 5/16	**14.2** 9/16	**22.3** 49.1
80 mm	SAFSA-P4B-TRB-80MM	SAFSA-P4B-TRB-80MME																
3 7/16	SAFSA-P4B-TRB-3 7/16	SAFSA-P4B-TRB-3 7/16 E																
3 ½	SAFSA-P4B-TRB-3 ½	SAFSA-P4B-TRB-3 ½ E	**127.0** 5	**381.0** 15	**114.3** 4 ½	**276.2** 10 7/8	**339.7** 13 3/8	**M20** ¾	**21.0** 13/16	**52.8** 2 1/16	**60.5** 2 3/8	**50.8** 2	**220.9** 8 11/16	**140.5** 5 17/32	**114.3** 4 ½	**236.5** 9 5/16	**14.2** 9/16	**24.1** 53.2
90 mm	SAFSA-P4B-TRB-90MM	SAFSA-P4B-TRB-90MME																
3 15/16	SAFSA-P4B-TRB-3 15/16	SAFSA-P4B-TRB-3 15/16 E																
4	SAFSA-P4B-TRB-4	SAFSA-P4B-TRB-4 E	**158.8** 6 ¼	**406.4** 16	**120.7** 4 ¾	**301.6** 11 7/8	**368.3** 14 ½	**M20** ¾	**21.0** 13/16	**54.3** 2 1/8	**69.9** 2 ¾	**50.7** 2	**240.7** 9 15/32	**154.0** 6 1/16	**125.5** 4 15/16	**256.4** 10 3/32	**14.2** 9/16	**34.0** 74.8
100 mm	SAFSA-P4B-TRB-100MM	SAFSA-P4B-TRB-100MME																

Continued on next page.

TYPE SAF 500 SELF-ALIGNING (SAFSA) MOUNTED TAPERED ROLLER BEARING: FOUR-BOLT PILLOW BLOCK DOUBLE LOCKING COLLAR

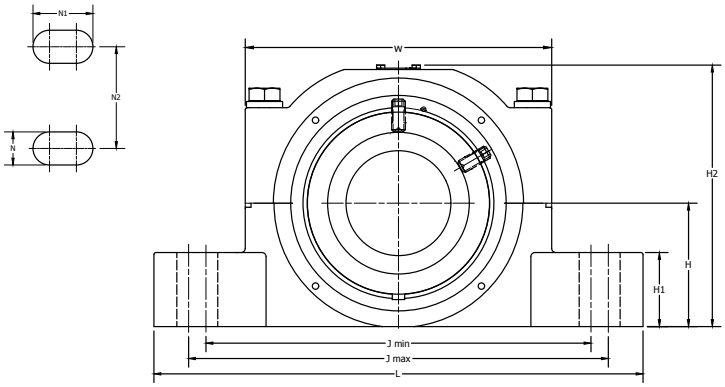

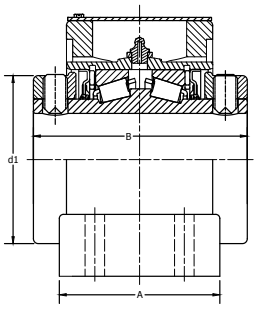

2 1/4 IN. THRU 3 IN. SHAFT SIZE

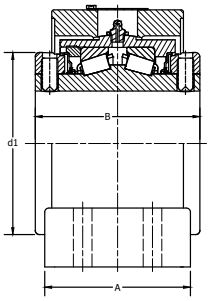

3 3/16 IN. THRU 5 IN. SHAFT SIZE

Shaft Dia.	Part No. Non-Expansion	Part No. Expansion	B	L	A	J min	J max	Bolt Dia.	N	N_1	N_2	H_1	H_2	d_1	H	W	Expansion	Approx. Wt.
mm in.			**mm** in.	**mm** in.	**mm** in.	**mm** in.	**mm** in.	**mm** in.	**mm** in.	**mm** in.	**mm** in.	**mm** in.	**mm** in.	**mm** in.	**mm** in.	**mm** in.	**mm** in.	**kg** lbs.
110 mm	SAFSA-P4B-TRB-110MM	SAFSA-P4B-TRB-110MME	**158.8** 6 1/4	**409.6** 16 1/8	**146.1** 5 3/4	**330.2** 13	**368.3** 14 1/2	**M20** 3/4	**21.0** 13/16	**40.0** 1 9/16	**69.9** 2 3/4	**44.1** 1 3/4	**260.6** 10 1/4	**154.0** 6 1/16	**133.4** 5 1/4	**281.8** 11 3/32	**14.2** 9/16	**32.6** 71.9
4 7/16	SAFSA-P4B-TRB-4 7/16	SAFSA-P4B-TRB-4 7/16 E																
4 1/2	SAFSA-P4B-TRB-4 1/2	SAFSA-P4B-TRB-4 1/2 E	**171.5** 6 3/4	**444.5** 17 1/2	**146.1** 5 3/4	**362.0** 14 1/4	**406.4** 16	**M24** 1	**25.4** 1	**47.6** 1 7/8	**82.6** 3 1/4	**50.8** 2	**279.8** 11	**171.1** 6 47/64	**152.4** 6	**281.8** 11 3/32	**14.2** 9/16	**44.9** 99.0
115 mm	SAFSA-P4B-TRB-115MM	SAFSA-P4B-TRB-115MME																
4 15/16	SAFSA-P4B-TRB-4 15/16	SAFSA-P4B-TRB-4 15/16 E																
5	SAFSA-P4B-TRB-5	SAFSA-P4B-TRB-5 E	**184.2** 7 1/4	**500.0** 19 11/16	**143.7** 5 21/32	**406.4** 16	**435.0** 17 1/8	**M24** 1	**26.2** 1 1/32	**40.5** 1 19/32	**85.9** 3 3/8	**44.5** 1 3/4	**300.6** 11 27/32	**196.9** 7 3/4	**152.4** 6	**323.1** 12 23/32	**14.2** 9/16	**58.7** 129.4
125 mm	SAFSA-P4B-TRB-125MM	SAFSA-P4B-TRB-125MME																
135 mm	SAFSA-P4B-TRB-135MM	SAFSA-P4B-TRB-135MME	**228.6** 9	**539.8** 21 1/4	**160** 6 19/64	**431.8** 17	**489.0** 19 1/4	**M24** 1	**27.0** 1 1/16	**55.6** 2 3/16	**95.3** 3 3/4	**73.0** 2 7/8	**344.7** 13 37/64	**238.1** 9 3/8	**160.3** 6 5/16	**384.3** 15 1/8	**14.2** 9/16	**140.6** 310
5 7/16	SAFSA-P4B-TRB-5 7/16	SAFSA-P4B-TRB-5 7/16 E																
5 1/2	SAFSA-P4B-TRB-5 1/2	SAFSA-P4B-TRB-5 1/2 E	**228.6** 9	**539.8** 21 1/4	**160** 6 19/64	**431.8** 17	**489.0** 19 1/4	**M24** 1	**27.0** 1 1/16	**55.6** 2 3/16	**95.3** 3 3/4	**82.6** 3 1/4	**354.7** 13 31/32	**238.1** 9 3/8	**169.9** 6 11/16	**384.3** 15 1/8	**14.2** 9/16	**144.2** 318
140 mm	SAFSA-P4B-TRB-140MM	SAFSA-P4B-TRB-140MME																
150 mm	SAFSA-P4B-TRB-150MM	SAFSA-P4B-TRB-150MME																
5 15/16	SAFSA-P4B-TRB-5 15/16	SAFSA-P4B-TRB-5 15/16 E	**228.6** 9	**628.6** 24 3/4	**171.5** 6 3/4	**482.6** 19	**549.3** 21 5/8	**M24** 1	**28.6** 1 1/8	**62.0** 2 7/16	**108.0** 4 1/4	**82.6** 3 1/4	**364.2** 14 11/32	**238.1** 9 3/8	**179.3** 7 1/16	**384.3** 15 1/8	**14.2** 9/16	**155.6** 343
6	SAFSA-P4B-TRB-6	SAFSA-P4B-TRB-6 E																
6 7/16	SAFSA-P4B-TRB-6 7/16	SAFSA-P4B-TRB-6 7/16 E	**266.7** 10 1/2	**679.5** 26 3/4	**181.1** 7 1/8	**530.2** 20 7/8	**287.3** 23 5/8	**M24** 1	**28.6** 1 1/8	**63.5** 2 1/2	**117.5** 4 5/8	**88.9** 3 1/2	**405.6** 15 31/32	**290.5** 11 7/16	**95.3** 7 1/2	**465.1** 18 5/16	**14.2** 9/16	**250.4** 552
6 1/2	SAFSA-P4B-TRB-6 1/2	SAFSA-P4B-TRB-6 1/2 E																
170 mm	SAFSA-P4B-TRB-170MM	SAFSA-P4B-TRB-170MME																
6 15/16	SAFSA-P4B-TRB-6 15/16	SAFSA-P4B-TRB-6 15/16 E	**266.7** 10 1/2	**711.2** 28	**181.1** 7 1/8	**549.3** 21 5/8	**619.1** 24 3/8	**M30** 1 1/4	**34.9** 1 3/8	**69.9** 2 3/4	**114.3** 4 1/2	**88.9** 3 1/2	**415.3** 16 23/64	**290.5** 11 7/16	**200.0** 7 7/8	**465.1** 18 5/16	**14.2** 9/16	**252.2** 556
7	SAFSA-P4B-TRB-7	SAFSA-P4B-TRB-7 E																
180 mm	SAFSA-P4B-TRB-180MM	SAFSA-P4B-TRB-180MME	**266.7** 10 1/2	**749.3** 29 1/2	**181.1** 7 1/8	**571.5** 22 1/2	**635.0** 25	**M30** 1 1/4	**34.9** 1 3/8	**52.8** 2 5/8	**127.0** 5	**88.9** 3 1/2	**424.7** 16 23/32	**290.5** 11 7/16	**209.6** 8 1/4	**465.1** 18 5/16	**14.2** 9/16	**250.4** 552

TYPE DI SELF-ALIGNING (DISA) MOUNTED TAPERED ROLLER BEARING: TWO-BOLT PILLOW BLOCK DOUBLE LOCKING COLLAR

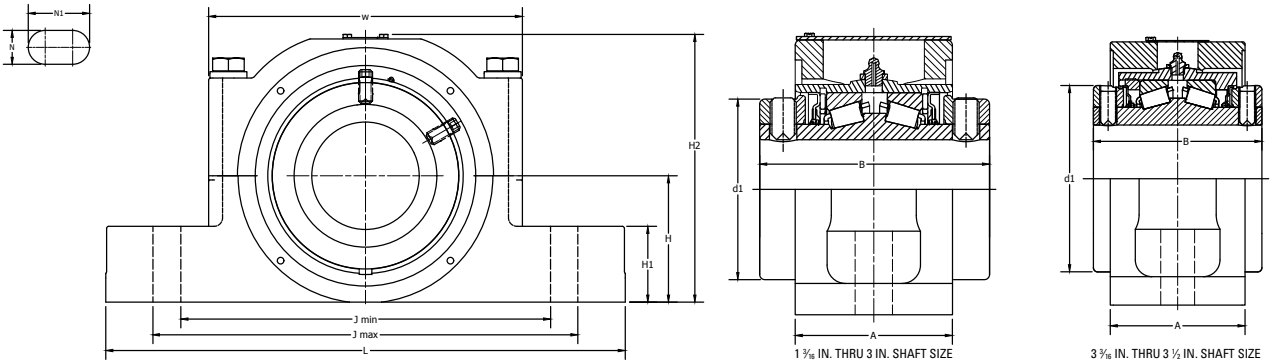

Shaft Dia.	Part No. Non-Expansion	Part No. Expansion	B	L	A	J min	J max	Bolt Dia.	N	N_1	H_1	H_2	d_1	H	W	Expansion	Approx. Wt.
mm in.			**mm** in.	**mm** in.	**mm** in.	**mm** in.	**mm** in.	**mm** in.	**mm** in.	**mm** in.	**mm** in.	**mm** in.	**mm** in.	**mm** in.	**mm** in.	**mm** in.	**kg** lbs.
1 3/8	DISA-P2B-TRB-1 3/8	DISA-P2B-TRB-1 3/8 E															
1 7/16	DISA-P2B-TRB-1 7/16	DISA-P2B-TRB-1 7/16 E	**76.2** 3	**204.8** 8 1/16	**55.6** 2 3/16	**150.0** 5 29/32	**177.8** 7	**M12** 1/2	**14.3** 9/16	**28.2** 1 7/64	**29** 1 9/64	**117.1** 4 39/64	**69.9** 2 3/4	**60.3** 2 3/8	**117.6** 4 5/8	**14.2** 9/16	**5.7** 12.6
35 mm	DISA-P2B-TRB-35MM	DISA-P2B-TRB-35MME															
1 1/2	DISA-P2B-TRB-1 1/2	DISA-P2B-TRB-1 1/2 E															
1 5/8	DISA-P2B-TRB-1 5/8	DISA-P2B-TRB-1 5/8 E															
1 11/16	DISA-P2B-TRB-1 11/16	DISA-P2B-TRB-1 11/16 E	**85.9** 3 3/8	**205.2** 8 5/64	**60.2** 2 3/8	**155.2** 6 7/64	**177.8** 7	**M12** 1/2	**14.3** 9/16	**28.2** 1 7/64	**29** 1 9/64	**127.8** 5 1/32	**80.9** 3 3/16	**66.7** 2 5/8	**130.3** 5 1/8	**14.2** 9/16	**7.3** 16.2
40 mm	DISA-P2B-TRB-40MM	DISA-P2B-TRB-40MME															
1 3/4	DISA-P2B-TRB-1 3/4	DISA-P2B-TRB-1 3/4 E															
1 7/8	DISA-P2B-TRB-1 7/8	DISA-P2B-TRB-1 7/8 E	**88.9** 3 1/2	**254.0** 10	**64.3** 2 17/32	**160.0** 6 9/64	**214.3** 8 7/16	**M12** 1/2	**14.3** 9/16	**41.5** 1 5/8	**28.2** 1 7/64	**138.9** 5 15/32	**87.3** 3 7/16	**73.0** 2 7/8	**141.2** 5 9/16	**14.2** 9/16	**8.6** 19.1
45 mm	DISA-P2B-TRB-45MM	DISA-P2B-TRB-45MME															
1 15/16	DISA-P2B-TRB-1 15/16	DISA-P2B-TRB-1 15/16 E															
2	DISA-P2B-TRB-2	DISA-P2B-TRB-2 E	**88.9** 3 1/2	**254.0** 10	**64.3** 2 17/32	**165.1** 6 1/2	**221.1** 8 45/64	**M16** 5/8	**17.5** 11/16	**45.6** 1 51/64	**31.8** 1 1/4	**138.9** 5 15/32	**87.3** 3 7/16	**73.0** 2 7/8	**141.2** 5 9/16	**14.2** 9/16	**8.6** 19.1
50 mm	DISA-P2B-TRB-50MM	DISA-P2B-TRB-50MME															
2 3/16	DISA-P2B-TRB-2 3/16	DISA-P2B-TRB-2 3/16 E	**95.3** 3 3/4	**273.1** 10 3/4	**67.3** 2 21/32	**177.8** 7	**241.3** 9 1/2	**M16** 5/8	**17.5** 11/16	**49.2** 1 15/16	**31.8** 1 1/4	**150.0** 5 5/32	**95.3** 3 3/4	**76.2** 3	**152.4** 6	**14.2** 9/16	**10.4** 23.1
55 mm	DISA-P2B-TRB-55MM	DISA-P2B-TRB-55MME															
2 1/4	DISA-P2B-TRB-2 1/4	DISA-P2B-TRB-2 1/4 E															
60 mm	DISA-P2B-TRB-60MM	DISA-P2B-TRB-60MME															
2 7/16	DISA-P2B-TRB-2 7/16	DISA-P2B-TRB-2 7/16 E	**101.6** 4	**304.8** 12	**73.2** 2 7/8	**200.0** 7 7/8	**260.4** 10 1/4	**M16** 5/8	**17.5** 11/16	**47.6** 1 7/8	**34.9** 1 3/8	**169.1** 6 21/32	**103.2** 4 1/16	**82.6** 3 1/4	**162.7** 6 13/32	**14.2** 9/16	**14.0** 30.8
2 1/2	DISA-P2B-TRB-2 1/2	DISA-P2B-TRB-2 1/2 E															
65 mm	DISA-P2B-TRB-65MM	DISA-P2B-TRB-65MME															

Continued on next page.

TYPE DI SELF-ALIGNING (DISA) MOUNTED TAPERED ROLLER BEARING: TWO-BOLT PILLOW BLOCK DOUBLE LOCKING COLLAR

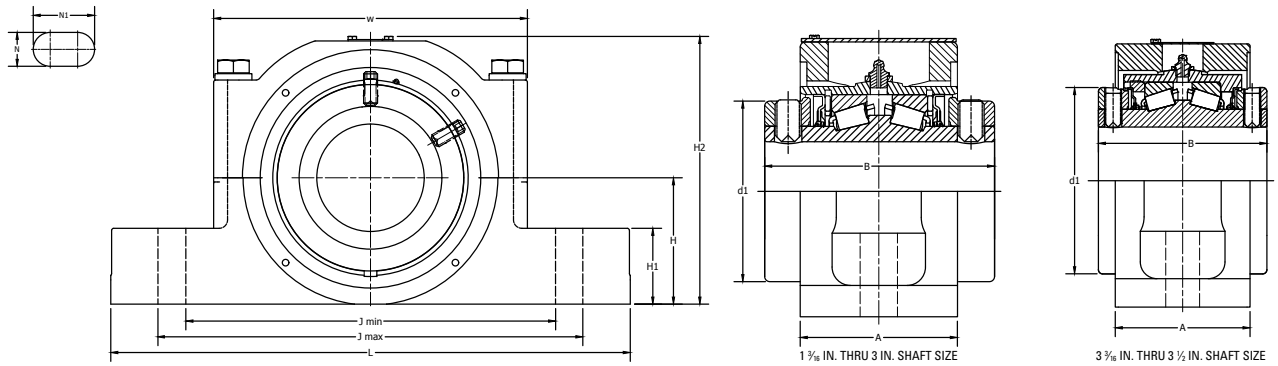

Shaft Dia.	Part No. Non-Expansion	Part No. Expansion	B	L	A	J min	J max	Bolt Dia.	N	N_1	H_1	H_2	d_1	H	W	Expansion	Approx. Wt.
mm in.			**mm** in.	**mm** in.	**mm** in.	**mm** in.	**mm** in.	**mm** in.	**mm** in.	**mm** in.	**mm** in.	**mm** in.	**mm** in.	**mm** in.	**mm** in.	**mm** in.	**kg** lbs.
2 11/16	DISA-P2B-TRB-2 11/16	DISA-P2B-TRB-2 11/16 E															
2 3/4	DISA-P2B-TRB-2 3/4	DISA-P2B-TRB-2 3/4 E															
70 mm	DISA-P2B-TRB-70MM	DISA-P2B-TRB-70MME	**114.3** 4 1/2	**341.3** 13 7/16	**84.3** 3 5/16	**241.3** 9 1/2	**292.1** 11 1/2	**M20** 3/4	**21.0** 53/64	**46.4** 1 53/64	**31.8** 1 1/4	**187.3** 7 3/8	**119.9** 4 23/32	**95.3** 3 3/4	**190.5** 7 1/2	**14.2** 9/16	**19.8** 43.7
2 15/16	DISA-P2B-TRB-2 15/16	DISA-P2B-TRB-2 15/16 E															
3	DISA-P2B-TRB-3	DISA-P2B-TRB-3 E															
75 mm	DISA-P2B-TRB-75MM	DISA-P2B-TRB-75MME															
3 3/16	DISA-P2B-TRB-3 3/16	DISA-P2B-TRB-3 3/16 E															
3 1/4	DISA-P2B-TRB-3 1/4	DISA-P2B-TRB-3 1/4 E															
80 mm	DISA-P2B-TRB-80MM	DISA-P2B-TRB-80MME															
85 mm	DISA-P2B-TRB-85MM	DISA-P2B-TRB-85MME	**127.3** 5	**406.4** 16	**101.6** 4	**276.2** 10 7/8	**350.8** 13 13/16	**M24** 7/8	**25.4** 1	**62.7** 2 15/32	**37.3** 1 15/32	**220.7** 8 11/16	**140.5** 5 17/32	**114.3** 4 1/2	**236.5** 9 5/16	**14.2** 9/16	**32.7** 72.2
3 7/16	DISA-P2B-TRB-3 7/16	DISA-P2B-TRB-3 7/16 E															
3 1/2	DISA-P2B-TRB-3 1/2	DISA-P2B-TRB-3 1/2 E															
90 mm	DISA-P2B-TRB-90MM	DISA-P2B-TRB-90MME															
3 15/16	DISA-P2B-TRB-3 15/16	DISA-P2B-TRB-3 15/16 E															
4	DISA-P2B-TRB-4	DISA-P2B-TRB-4 E	**158.8** 6 1/4	**419.1** 16 1/2	**120.7** 4 3/4	**313.9** 12 23/64	**374.7** 14 3/4	**M24** 7/8	**25.4** 1	**55.6** 2 3/16	**50.8** 2	**238.9** 9 13/32	**154.0** 6 1/16	**127.0** 5	**256.4** 10 3/32	**14.2** 9/16	**52.8** 116.4
100 mm	DISA-P2B-TRB-100MM	DISA-P2B-TRB-100MME															
4 7/16	DISA-P2B-TRB-4 7/16	DISA-P2B-TRB-4 7/16 E															
4 1/2	DISA-P2B-TRB-4 1/2	DISA-P2B-TRB-4 1/2 E															
110 mm	DISA-P2B-TRB-110MM	DISA-P2B-TRB-110MME	**171.5** 6 3/4	**466.7** 18 3/8	**129.4** 5 3/32	**362.0** 14 1/4	**412.8** 16 1/4	**M24** 7/8	**27.0** 1 1/16	**52.4** 2 1/16	**49.2** 1 15/16	**270.0** 10 5/8	**171.1** 6 47/64	**146.1** 5 3/4	**281.8** 11 3/32	**14.2** 9/16	**64.1** 141.3
115 mm	DISA-P2B-TRB-115MM	DISA-P2B-TRB-115MME															
4 15/16	DISA-P2B-TRB-4 15/16	DISA-P2B-TRB-4 15/16 E															
5	DISA-P2B-TRB-5	DISA-P2B-TRB-5 E	**184.2** 7 1/4	**520.7** 20 1/2	**143.7** 5 21/32	**384.2** 15 1/8	**458.8** 18 1/16	**M30** 1 1/4	**33.3** 1 5/16	**70.6** 2 25/32	**49.2** 1 15/16	**303.6** 11 61/64	**196.9** 7 3/4	**158.8** 6 1/4	**323.1** 12 23/32	**14.2** 9/16	**97.6** 215.1
125 mm	DISA-P2B-TRB-125MM	DISA-P2B-TRB-125MME															

TYPE DI SELF-ALIGNING (DISA) MOUNTED TAPERED ROLLER BEARING: FOUR-BOLT PILLOW BLOCK DOUBLE LOCKING COLLAR

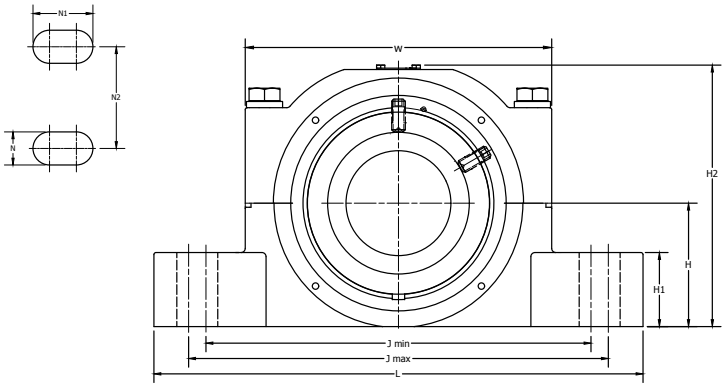

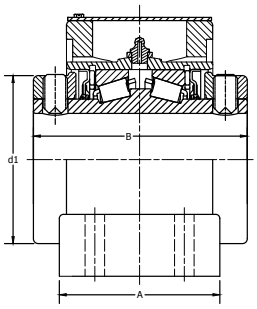

2 ¼ IN. THRU 3 IN. SHAFT SIZE

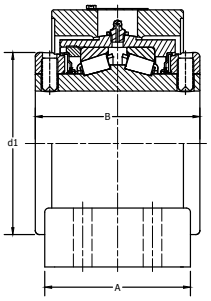

3 3/16 IN. THRU 5 IN. SHAFT SIZE

Shaft Dia.	Part No. Non-Expansion	Part No. Expansion	B	L	A	J min	J max	Bolt Dia.	N	N_1	N_2	H_1	H_2	d_1	H	W	Expansion	Approx. Wt.
mm in.			**mm** in.	**mm** in.	**mm** in.	**mm** in.	**mm** in.	**mm** in.	**mm** in.	**mm** in.	**mm** in.	**mm** in.	**mm** in.	**mm** in.	**mm** in.	**mm** in.	**mm** in.	**kg** lbs.
2 7/16	DISA-P4B-TRB-2 7/16	DISA-P4B-TRB-2 7/16 E																
2 ½	DISA-P4B-TRB-2 ½	DISA-P4B-TRB-2 ½ E	**101.6** 4	**304.8** 12	**88.9** 3 ½	**201.6** 7 15/16	**260.4** 10 ¼	**M16** ⅝	**17.5** 11/16	**46.9** 1 27/32	**47.6** 1 ⅞	**41.3** 1 ⅝	**163.1** 6 27/64	**103.1** 4 1/16	**82.6** 3 ¼	**162.8** 6 13/32	**14.2** 9/16	**14.8** 32.6
65 mm	DISA-P4B-TRB-65MM	DISA-P4B-TRB-65MME																
2 11/16	DISA-P4B-TRB-2 11/16	DISA-P4B-TRB-2 11/16 E																
2 ¾	DISA-P4B-TRB-2 ¾	DISA-P4B-TRB-2 ¾ E	**114.3** 4 ½	**330.2** 13	**95.3** 3 ¾	**228.6** 9	**292.1** 11 ½	**M16** ⅝	**17.5** 11/16	**49.3** 1 15/16	**54.0** 2 ⅛	**47.6** 1 ⅞	**183.6** 7 15/64	**119.9** 4 23/32	**95.3** 3 ¾	**190.5** 7 ½	**14.2** 9/16	**20.7** 45.5
70 mm	DISA-P4B-TRB-70MM	DISA-P4B-TRB-70MME																
2 15/16	DISA-P4B-TRB-2 15/16	DISA-P4B-TRB-2 15/16 E																
3	DISA-P4B-TRB-3	DISA-P4B-TRB-3 E	**114.3** 4 ½	**320.7** 12 ⅝	**95.3** 3 ¾	**239.7** 9 7/16	**292.1** 11 ½	**M16** ⅝	**17.5** 11/16	**43.7** 1 23/32	**54.1** 2 ⅛	**47.8** 1 ⅞	**183.6** 7 15/64	**119.9** 4 23/32	**95.3** 3 ¾	**190.5** 7 ½	**14.2** 9/16	**20.5** 45.2
75 mm	DISA-P4B-TRB-75MM	DISA-P4B-TRB-75MME																
3 7/16	DISA-P4B-TRB-3 7/16	DISA-P4B-TRB-3 7/16 E																
3 ½	DISA-P4B-TRB-3 ½	DISA-P4B-TRB-3 ½ E	**127.0** 5	**381.0** 15	**114.3** 4 ½	**276.2** 10 ⅞	**339.7** 13 ⅜	**M20** ¾	**21.0** 53/64	**52.8** 2 5/64	**60.3** 2 ⅜	**57.2** 2 ¼	**217.4** 8 9/16	**140.5** 5 17/32	**114.3** 4 ½	**236.5** 9 5/16	**14.2** 9/16	**32.7** 72.2
90 mm	DISA-P4B-TRB-90MM	DISA-P4B-TRB-90MME																

Continued on next page.

TYPE DI SELF-ALIGNING (DISA) MOUNTED TAPERED ROLLER BEARING: FOUR-BOLT PILLOW BLOCK DOUBLE LOCKING COLLAR

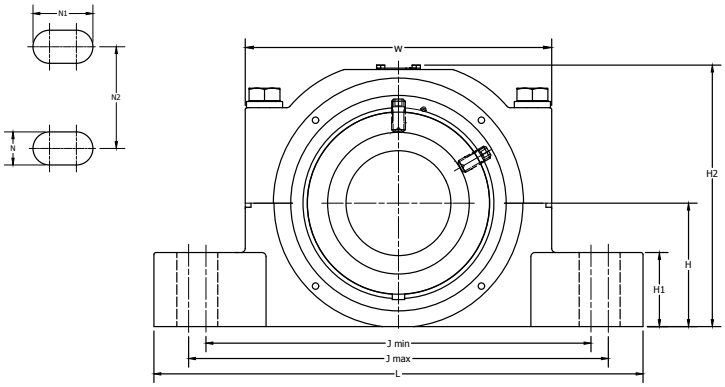

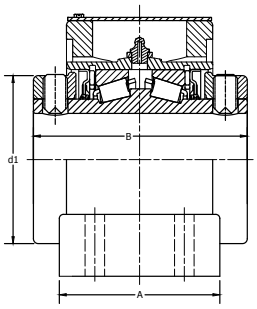

2 ¼ IN. THRU 3 IN. SHAFT SIZE

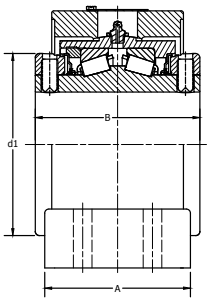

3 3/16 IN. THRU 5 IN. SHAFT SIZE

Shaft Dia.	Part No. Non-Expansion	Part No. Expansion	B	L	A	J min	J max	Bolt Dia.	N	N_1	N_2	H_1	H_2	d_1	H	W	Expansion	Approx. Wt.
mm in.			**mm** in.	**mm** in.	**mm** in.	**mm** in.	**mm** in.	**mm** in.	**mm** in.	**mm** in.	**mm** in.	**mm** in.	**mm** in.	**mm** in.	**mm** in.	**mm** in.	**mm** in.	**kg** lbs.
3 15/16	DISA-P4B-TRB-3 15/16	DISA-P4B-TRB-3 15/16 E																
4	DISA-P4B-TRB-4	DISA-P4B-TRB-4 E	**158.8** 6 ¼	**419.1** 16 ½	**120.7** 4 ¾	**301.6** 11 ⅞	**374.7** 14 ¾	**M20** ¾	**25.4** 1	**61.9** 2 7/16	**69.9** 2 ¾	**61.9** 2 7/16	**238.9** 9 13/32	**154.0** 6 1/16	**127.0** 5	**256.4** 10 3/32	**14.2** 9/16	**52.8** 116.4
100 mm	DISA-P4B-TRB-100MM	DISA-P4B-TRB-100MME																
4 7/16	DISA-P4B-TRB-4 7/16	DISA-P4B-TRB-4 7/16 E																
4 ½	DISA-P4B-TRB-4 ½	DISA-P4B-TRB-4 ½ E	**171.5** 6 ¾	**466.7** 18 3/8	**129.4** 5 3/32	**362.0** 14 ¼	**412.8** 16 ¼	**M24** 1	**27.0** 1 1/16	**52.4** 2 1/16	**82.6** 3 ¼	**69.9** 2 ¾	**270.0** 10 5/8	**171.1** 6 47/64	**146.1** 5 ¾	**281.8** 11 3/32	**14.2** 9/16	**64.1** 141.3
115 mm	DISA-P4B-TRB-115MM	DISA-P4B-TRB-115MME																
4 15/16	DISA-P4B-TRB-4 15/16	DISA-P4B-TRB-4 15/16 E																
5	DISA-P4B-TRB-5	DISA-P4B-TRB-5 E	**184.2** 7 ¼	**520.7** 20 ½	**143.7** 5 21/32	**384.2** 15 ⅛	**408.0** 16 1/16	**M24** 1	**27.0** 1 1/16	**64.3** 2 17/32	**85.7** 3 ⅜	**76.2** 3	**303.5** 11 61/64	**196.9** 7 ¾	**158.8** 6 ¼	**323.1** 12 23/32	**14.2** 9/16	**97.6** 215.1
125 mm	DISA-P4B-TRB-125MM	DISA-P4B-TRB-125MME																
5 7/16	DISA-P4B-TRB-5 7/16	DISA-P4B-TRB-5 7/16 E	**228.6** 9	**601.7** 23 11/16	**160** 6 19/64	**482.6** 19	**523.9** 20 5/8	**M24** 1	**28.6** 1 ⅛	**49.2** 1 15/16	**76.2** 3	**82.6** 3 ¼	**366.0** 14 13/32	**238.1** 9 ⅜	**181.0** 7 ⅛	**384.3** 15 ⅛	**14.2** 9/16	**154.2** 340.0
5 15/16	DISA-P4B-TRB-5 15/16	DISA-P4B-TRB-5 15/16 E																

TYPE K SELF-ALIGNING (KSA) MOUNTED TAPERED ROLLER BEARING: TWO-BOLT PILLOW BLOCK SINGLE LOCKING COLLAR

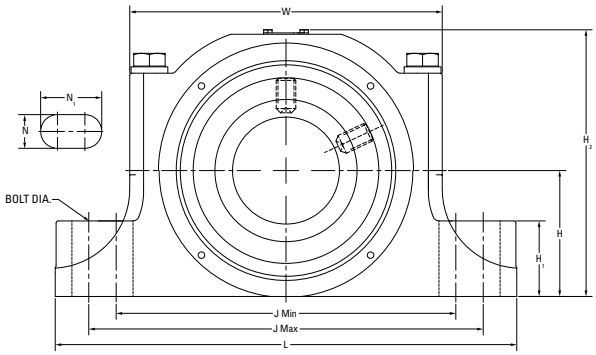

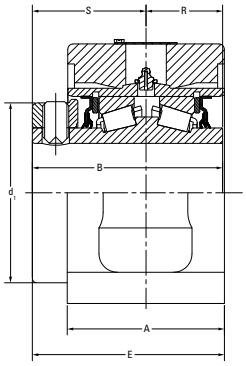

1 3/16 IN. THRU 3 IN. SHAFT SIZE

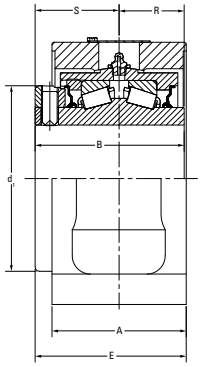

3 3/16 IN. THRU 3 1/2 IN. SHAFT SIZE

Shaft Dia.	Part No. Non-Expansion	Part No. Expansion	B	L	A	J min	J max	Bolt Dia.	E	N	N_1	H_1	H_2	d_1	H	W	S	R	Expansion	Approx. Wt.
mm in.			**mm** in.	**mm** in.	**mm** in.	**mm** in.	**mm** in.	**mm** in.	**mm** in.	**mm** in.	**mm** in.	**mm** in.	**mm** in.	**mm** in.	**mm** in.	**mm** in.	**mm** in.	**mm** in.	**mm** in.	**kg** lbs.
1 3/8	KSA-P2BA-TRB-1 3/8	KSA-P2BA-TRB-1 3/8 E																		
1 7/16	KSA-P2BA-TRB-1 7/16	KSA-P2BA-TRB-1 7/16 E	**64.3** 2 17/32	**203.2** 8	**55.6** 2 3/16	**158.8** 6 1/4	**177.8** 7	**M12** 1/2	**65.9** 2 19/32	**14.3** 9/16	**23.8** 15/16	**28.6** 1 1/8	**120.7** 4 3/4	**69.9** 2 3/4	**60.3** 2 3/8	**117.6** 4 5/8	**38.1** 1 1/2	**26.2** 1 1/32	**14.3** 9/16	**5.7** 12.6
35 mm	KSA-P2BA-TRB-35MM	KSA-P2BA-TRB-35MME																		
1 1/2	KSA-P2BA-TRB-1 1/2	KSA-P2BA-TRB-1 1/2 E																		
1 5/8	KSA-P2BA-TRB-1 5/8	KSA-P2BA-TRB-1 5/8 E																		
1 11/16	KSA-P2BA-TRB-1 11/16	KSA-P2BA-TRB-1 11/16 E	**72.2** 2 27/32	**228.6** 9	**60.2** 2 3/8	**174.8** 6 7/8	**193.7** 7 5/8	**M12** 1/2	**73.0** 2 7/8	**14.3** 9/16	**23.8** 15/16	**28.6** 1 1/8	**131.0** 5 5/32	**80.9** 3 3/16	**66.7** 2 5/8	**130.3** 5 1/8	**42.9** 1 11/16	**29.3** 1 5/32	**14.3** 9/16	**7.4** 16.2
40 mm	KSA-P2BA-TRB-40MM	KSA-P2BA-TRB-40MME																		
1 3/4	KSA-P2BA-TRB-1 3/4	KSA-P2BA-TRB-1 3/4 E																		
1 7/8	KSA-P2BA-TRB-1 7/8	KSA-P2BA-TRB-1 7/8 E																		
1 15/16	KSA-P2BA-TRB-1 15/16	KSA-P2BA-TRB-1 15/16 E																		
2	KSA-P2BA-TRB-2	KSA-P2BA-TRB-2 E	**75.0** 2 61/64	**251.0** 9 7/8	**64.3** 2 17/32	**165.1** 6 1/2	**220.7** 8 11/16	**M16** 5/8	**76.7** 3 1/64	**17.5** 11/16	**45.2** 1 25/32	**31.8** 1 1/4	**142.1** 5 19/32	**87.3** 3 7/16	**73.0** 2 7/8	**141.2** 5 9/16	**44.5** 1 3/4	**30.5** 1 13/64	**14.3** 9/16	**8.7** 19.2
45 mm	KSA-P2BA-TRB-45MM	KSA-P2BA-TRB-45MME																		
50 mm	KSA-P2BA-TRB-50MM	KSA-P2BA-TRB-50MME																		
2 3/16	KSA-P2BA-TRB-2 3/16	KSA-P2BA-TRB-2 3/16 E																		
2 1/4	KSA-P2BA-TRB-2 1/4	KSA-P2BA-TRB-2 1/4 E	**79.4** 3 1/8	**269.0** 10 19/32	**67.3** 2 21/32	**182.9** 7 3/16	**241.3** 9 1/2	**M16** 5/8	**81.3** 3 3/16	**17.5** 11/16	**46.7** 1 27/32	**27.8** 1 3/32	**150.0** 5 29/32	**95.3** 3 3/4	**76.2** 3	**152.4** 6	**47.6** 1 7/8	**31.4** 1 15/64	**14.3** 9/16	**10.0** 22
2 7/16	KSA-P2BA-TRB-2 7/16	KSA-P2BA-TRB-2 7/16 E																		
2 1/2	KSA-P2BA-TRB-2 1/2	KSA-P2BA-TRB-2 1/2 E																		
60 mm	KSA-P2BA-TRB-60MM	KSA-P2BA-TRB-60MME	**84.1** 3 5/16	**304.8** 12	**73.2** 2 7/8	**235.0** 9 1/4	**260.4** 10 1/4	**M16** 5/8	**87.4** 3 7/16	**17.5** 11/16	**30.2** 1 3/16	**34.9** 1 3/8	**166.7** 6 9/16	**103.2** 4 1/16	**82.6** 3 1/4	**162.7** 6 13/32	**50.8** 2	**33.3** 1 5/16	**14.3** 9/16	**14.0** 30.7
65 mm	KSA-P2BA-TRB-65MM	KSA-P2BA-TRB-65MME																		

Continued on next page.

TYPE K SELF-ALIGNING (KSA) MOUNTED TAPERED ROLLER BEARING: TWO-BOLT PILLOW BLOCK SINGLE LOCKING COLLAR

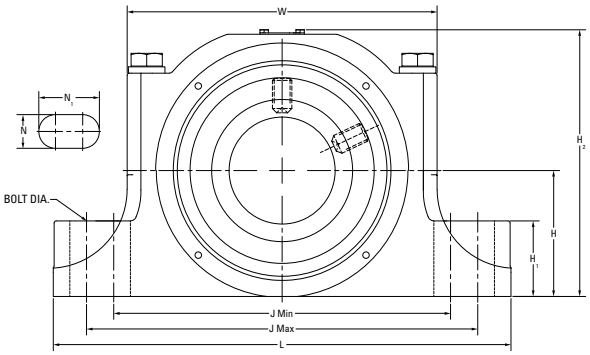

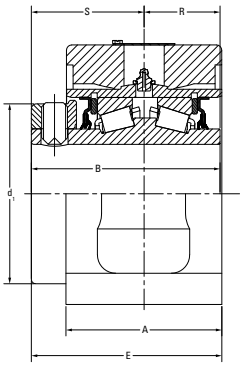

1 3/16 IN. THRU 3 IN. SHAFT SIZE

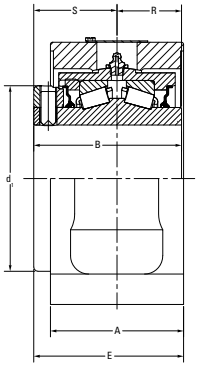

3 3/16 IN. THRU 3 1/2 IN. SHAFT SIZE

Shaft Dia.	Part No. Non-Expansion	Part No. Expansion	B	L	A	J min	J max	Bolt Dia.	E	N	N_1	H_1	H_2	d_1	H	W	S	R	Expansion	Approx. Wt.
mm in.			**mm** in.	**mm** in.	**mm** in.	**mm** in.	**mm** in.	**mm** in.	**mm** in.	**mm** in.	**mm** in.	**mm** in.	**mm** in.	**mm** in.	**mm** in.	**mm** in.	**mm** in.	**mm** in.	**mm** in.	**kg** lbs.
2 11/16	KSA-P2BA-TRB-2 11/16	KSA-P2BA-TRB-2 11/16 E																		
2 3/4	KSA-P2BA-TRB-2 3/4	KSA-P2BA-TRB-2 3/4 E																		
2 15/16	KSA-P2BA-TRB-2 15/16	KSA-P2BA-TRB-2 15/16 E	**93.7**	**341.3**	**84.3**	**250.8**	**292.1**	**M20**	**99.4**	**20.7**	**42.1**	**34.9**	**187.3**	**119.9**	**95.3**	**190.5**	**57.2**	**36.5**	**14.3**	**19.9**
3	KSA-P2BA-TRB-3	KSA-P2BA-TRB-3 E	3 11/16	13 7/16	3 5/16	9 7/8	11 1/2	3/4	3 29/32	13/16	1 21/32	1 3/8	7 3/8	4 23/32	3 3/4	7 1/2	2 1/4	1 7/16	9/16	43.7
70 mm	KSA-P2BA-TRB-70MM	KSA-P2BA-TRB-70MME																		
75 mm	KSA-P2BA-TRB-75MM	KSA-P2BA-TRB-75MME																		
3 3/16	KSA-P2BA-TRB-3 3/16	KSA-P2BA-TRB-3 3/16 E																		
3 1/4	KSA-P2BA-TRB-3 1/4	KSA-P2BA-TRB-3 1/4 E																		
3 7/16	KSA-P2BA-TRB-3 7/16	KSA-P2BA-TRB-3 7/16 E	**106.4**	**381.0**	**95.3**	**276.2**	**350.8**	**M24**	**111.2**	**25.4**	**62.7**	**38.9**	**220.7**	**140.5**	**114.3**	**236.5**	**63.5**	**42.9**	**14.3**	**32.8**
3 1/2	KSA-P2BA-TRB-3 1/2	KSA-P2BA-TRB-3 1/2 E	4 3/16	15	3 3/4	10 7/8	13 13/16	7/8	4 3/8	1	2 15/32	1 17/32	8 11/16	5 17/32	4 1/2	9 5/16	2 1/2	1 11/16	9/16	72.2
80 mm	KSA-P2BA-TRB-80MM	KSA-P2BA-TRB-80MME																		
90 mm	KSA-P2BA-TRB-90MM	KSA-P2BA-TRB-90MME																		

TYPE K SELF-ALIGNING (KSA) MOUNTED TAPERED ROLLER BEARING: FOUR-BOLT PILLOW BLOCK SINGLE LOCKING COLLAR

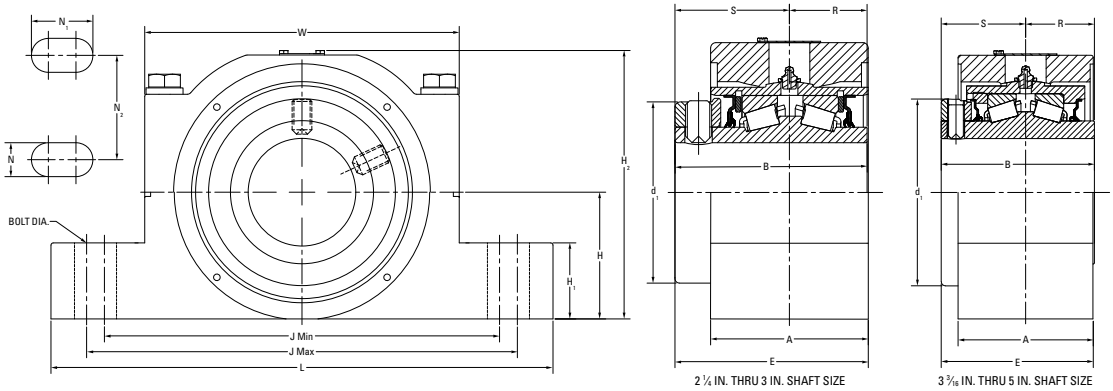

Shaft Dia.	Part No. Non-Expansion	Part No. Expansion	B	L	A	J min	J max	Bolt Dia.	E	N	N_1	N_2	H_1	H_2	d_1	H	W	S	R	Expansion	Approx. Wt.
mm in.			**mm** in.	**mm** in.	**mm** in.	**mm** in.	**mm** in.	**mm** in.	**mm** in.	**mm** in.	**mm** in.	**mm** in.	**mm** in.	**mm** in.	**mm** in.	**mm** in.	**mm** in.	**mm** in.	**mm** in.	**mm** in.	**kg** lbs.
2 7/16	KSA-P4B-TRB-2 7/16	KSA-P4B-TRB-2 7/16 E	**84.1** 3 5/16	**304.8** 12	**88.9** 3 1/2	**235.7** 9 9/32	**260.4** 10 1/4	**M16** 5/8	**95.3** 3 3/4	**14.3** 9/16	**27.0** 1 1/16	**44.5** 1 3/4	**41.3** 1 5/8	**166.7** 6 9/16	**103.1** 4 1/16	**82.6** 3 1/4	**162.8** 6 13/32	**50.8** 2	**33.3** 1 5/16	**14.3** 9/16	**14.4** 31.7
2 1/2	KSA-P4B-TRB-2 1/2	KSA-P4B-TRB-2 1/2 E																			
2 11/16	KSA-P4B-TRB-2 11/16	KSA-P4B-TRB-2 11/16 E	**93.7** 3 11/16	**320.7** 12 5/8	**95.3** 3 3/4	**250.8** 9 7/8	**292.1** 11 1/2	**M16** 5/8	**104.9** 4 1/8	**17.5** 11/16	**38.1** 1 1/2	**47.6** 1 7/8	**47.6** 1 7/8	**187.1** 7 3/8	**119.9** 4 23/32	**95.3** 3 3/4	**190.5** 7 1/2	**57.2** 2 1/4	**36.5** 1 7/16	**14.3** 9/16	**20.7** 45.5
2 15/16	KSA-P4B-TRB-2 15/16	KSA-P4B-TRB-2 15/16 E																			
3	KSA-P4B-TRB-3	KSA-P4B-TRB-3 E																			
3 7/16	KSA-P4B-TRB-3 7/16	KSA-P4B-TRB-3 7/16 E	**106.4** 4 3/16	**406.4** 16	**114.3** 4 1/2	**276.2** 10 7/8	**350.8** 13 13/16	**M20** 3/4	**120.7** 4 3/4	**21.0** 13/16	**57.9** 2 9/32	**50.8** 2	**50.8** 2	**220.7** 8 11/16	**140.5** 5 17/32	**114.3** 4 1/2	**236.5** 9 5/16	**63.5** 2 1/2	**42.9** 1 11/16	**14.3** 9/16	**32.8** 72.2
3 1/2	KSA-P4B-TRB-3 1/2	KSA-P4B-TRB-3 1/2 E																			

Continued on next page.

TYPE K SELF-ALIGNING (KSA) MOUNTED TAPERED ROLLER BEARING: FOUR-BOLT PILLOW BLOCK SINGLE LOCKING COLLAR

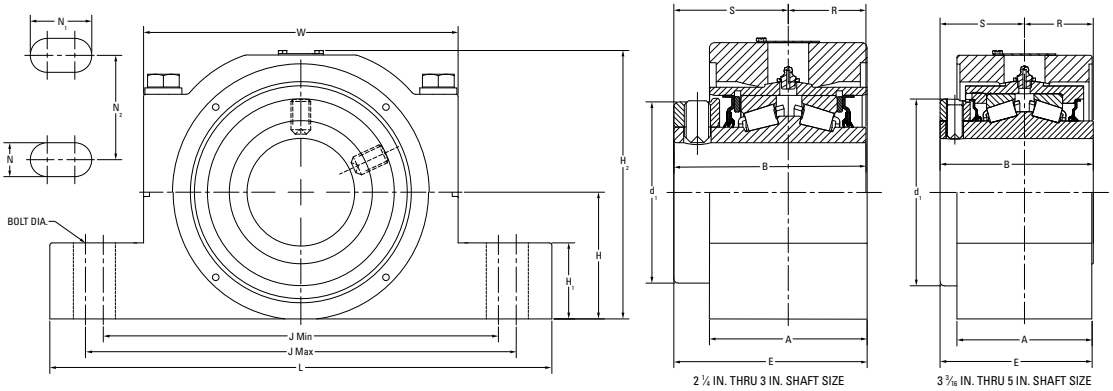

Shaft Dia.	Part No. Non-Expansion	Part No. Expansion	B	L	A	J min	J max	Bolt Dia.	E	N	N_1	N_2	H_1	H_2	d_1	H	W	S	R	Expansion	Approx. Wt.
mm in.			**mm** in.	**mm** in.	**mm** in.	**mm** in.	**mm** in.	**mm** in.	**mm** in.	**mm** in.	**mm** in.	**mm** in.	**mm** in.	**mm** in.	**mm** in.	**mm** in.	**mm** in.	**mm** in.	**mm** in.	**mm** in.	**kg** lbs.
3 15/16	KSA-P4B-TRB-3 15/16	KSA-P4B-TRB-3 15/16 E	**133.4** 5 1/4	**442.9** 17 7/16	**120.7** 4 3/4	**333.4** 13 1/8	**374.7** 14 3/4	**M20** 3/4	**139.8** 5 1/2	**21.0** 13/16	**41.3** 1 5/8	**50.8** 2	**50.8** 2	**242.1** 9 17/32	**154.0** 6 1/16	**127.0** 5	**256.4** 10 3/32	**79.4** 3 1/8	**54.0** 2 1/8	**14.3** 9/16	**53.9** 118.6
4	KSA-P4B-TRB-4	KSA-P4B-TRB-4 E																			
4 7/16	KSA-P4B-TRB-4 7/16	KSA-P4B-TRB-4 7/16 E	**142.9** 5 5/8	**444.5** 17 1/2	**143.7** 5 21/32	**365.1** 14 3/8	**412.8** 16 1/4	**M20** 3/4	**157.6** 6 13/64	**21.0** 13/16	**44.8** 1 49/64	**57.2** 2 1/4	**50.8** 2	**273.1** 10 3/4	**171.1** 6 47/64	**146.1** 5 3/4	**281.8** 11 3/32	**85.7** 3 3/8	**57.2** 2 1/4	**14.3** 9/16	**64.2** 141.3
4 1/2	KSA-P4B-TRB-4 1/2	KSA-P4B-TRB-4 1/2 E																			
4 15/16	KSA-P4B-TRB-4 15/16	KSA-P4B-TRB-4 15/16 E	**158.0** 6 7/32	**500.0** 19 11/16	**143.7** 5 21/32	**393.7** 15 1/2	**458.8** 18 1/16	**M24** 7/8	**163.9** 6 29/64	**25.4** 1	**57.9** 2 9/32	**63.5** 2 1/2	**57.2** 2 1/4	**306.4** 12 1/16	**196.9** 7 3/4	**158.8** 6 1/4	**323.1** 12 23/32	**92.0** 3 5/8	**65.9** 2 19/32	**14.3** 9/16	**97.8** 215.1
5	KSA-P4B-TRB-5	KSA-P4B-TRB-5 E																			

TYPE SN 500 SELF-ALIGNING (SNSA) MOUNTED TAPERED ROLLER BEARING: TWO-BOLT PILLOW BLOCK DOUBLE LOCKING COLLAR

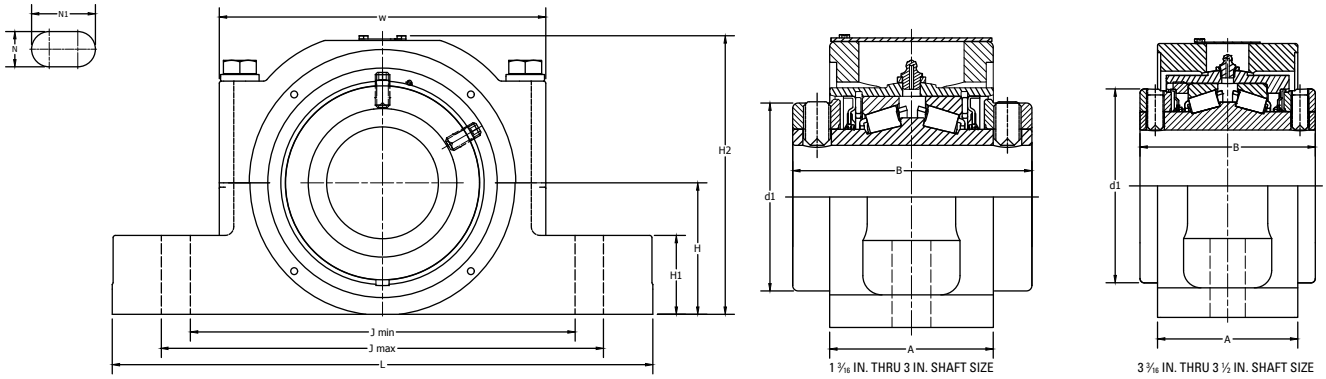

Shaft Dia.	Part No. Non-Expansion	Part No. Expansion	B	L	A	J min	J max	Bolt Dia.	N	N_1	H_1	H_2	d_1	H	W	Expansion	Approx. Wt.
mm in.			**mm** in.	**mm** in.	**mm** in.	**mm** in.	**mm** in.	**mm** in.	**mm** in.	**mm** in.	**mm** in.	**mm** in.	**mm** in.	**mm** in.	**mm** in.	**mm** in.	**kg** lbs.
1 3/8	SNSA-P2B-TRB-1 3/8	SNSA-P2B-TRB-1 3/8 E															
1 7/16	SNSA-P2B-TRB-1 7/16	SNSA-P2B-TRB-1 7/16 E	**76.2** 3	**204.8** 8 1/16	**55.6** 2 3/16	**150.0** 5 29/32	**177.8** 7	**M12** 1/2	**14.3** 9/16	**28.2** 1 7/64	**28.6** 1 1/8	**116.8** 4 39/64	**69.9** 2 3/4	**60.0** 2 23/64	**117.6** 4 5/8	**14.2** 9/16	**5.4** 11.8
35 mm	SNSA-P2B-TRB-35MM	SNSA-P2B-TRB-35MME															
1 1/2	SNSA-P2B-TRB-1 1/2	SNSA-P2B-TRB-1 1/2 E															
1 5/8	SNSA-P2B-TRB-1 5/8	SNSA-P2B-TRB-1 5/8 E															
1 11/16	SNSA-P2B-TRB-1 11/16	SNSA-P2B-TRB-1 11/16 E	**85.9** 3 3/8	**205.2** 8 5/64	**60.2** 2 3/8	**155.2** 6 7/64	**177.8** 7	**M12** 1/2	**14.3** 9/16	**25.8** 1 1/64	**25.4** 1	**121.4** 4 25/32	**80.9** 3 3/16	**60.0** 2 23/64	**130.3** 5 1/8	**14.2** 9/16	**6.1** 13.4
40 mm	SNSA-P2B-TRB-40MM	SNSA-P2B-TRB-40MME															
1 3/4	SNSA-P2B-TRB-1 3/4	SNSA-P2B-TRB-1 3/4 E															
1 7/8	SNSA-P2B-TRB-1 7/8	SNSA-P2B-TRB-1 7/8 E	**88.9** 3 1/2	**254.0** 10	**64.3** 2 17/32	**160.0** 6 9/64	**214.3** 8 7/16	**M12** 1/2	**14.3** 9/16	**41.28** 1 5/8	**24.6** 31/32	**125.5** 5 15/16	**87.3** 3 7/16	**60.0** 2 23/64	**141.2** 5 9/16	**14.2** 9/16	**6.9** 15.2
45 mm	SNSA-P2B-TRB-45MM	SNSA-P2B-TRB-45MME															
1 15/16	SNSA-P2B-TRB-1 15/16	SNSA-P2B-TRB-1 15/16 E															
2	SNSA-P2B-TRB-2	SNSA-P2B-TRB-2 E	**88.9** 3 1/2	**254.0** 10	**64.3** 2 17/32	**165.1** 6 1/2	**221.1** 8 45/64	**M16** 5/8	**17.5** 11/16	**45.6** 1 51/64	**28.6** 1 1/8	**135.7** 5 11/32	**87.3** 3 7/16	**70.0** 2 3/4	**141.2** 5 9/16	**14.2** 9/16	**7.8** 17.2
50 mm	SNSA-P2B-TRB-50MM	SNSA-P2B-TRB-50MME															
55 mm	SNSA-P2B-TRB-55MM	SNSA-P2B-TRB-55MME	**95.3** 3 3/4	**273.1** 10 3/4	**67.3** 2 21/32	**177.8** 7	**241.3** 9 1/2	**M16** 5/8	**17.5** 11/16	**49.2** 1 15/16	**31.9** 1 1/4	**140.1** 5 33/64	**95.3** 3 3/4	**70.0** 2 3/4	**152.4** 6	**14.2** 9/16	**9.2** 20.3
2 3/16	SNSA-P2B-TRB-2 3/16	SNSA-P2B-TRB-2 3/16 E	**95.3** 3 3/4	**275.0** 10 53/64	**67.3** 2 21/32	**224.2** 8 53/64	**236.1** 9 19/64	**M16** 5/8	**17.5** 11/16	**49.2** 1 15/16	**31.7** 1 1/4	**150.0** 5 29/32	**95.3** 3 3/4	**80.0** 3 5/32	**152.4** 6	**14.2** 9/16	**9.2** 20.3
2 1/4	SNSA-P2B-TRB-2 1/4	SNSA-P2B-TRB-2 1/4 E															
2 7/16	SNSA-P2B-TRB-2 7/16	SNSA-P2B-TRB-2 7/16 E															
2 1/2	SNSA-P2B-TRB-2 1/2	SNSA-P2B-TRB-2 1/2 E	**101.6** 4	**275.0** 10 53/64	**73.2** 2 7/8	**183.0** 7 13/64	**244.5** 9 5/8	**M16** 5/8	**17.5** 11/16	**48.4** 1 29/32	**32.5** 1 9/32	**160.3** 6 5/16	**103.2** 4 1/16	**80.0** 3 5/32	**162.7** 6 13/32	**14.2** 9/16	**12.7** 27.9
60 mm	SNSA-P2B-TRB-60MM	SNSA-P2B-TRB-60MME															
65 mm	SNSA-P2B-TRB-65MM	SNSA-P2B-TRB-65MME															

Continued on next page.

TYPE SN 500 SELF-ALIGNING (SNSA) MOUNTED TAPERED ROLLER BEARING: TWO-BOLT PILLOW BLOCK DOUBLE LOCKING COLLAR

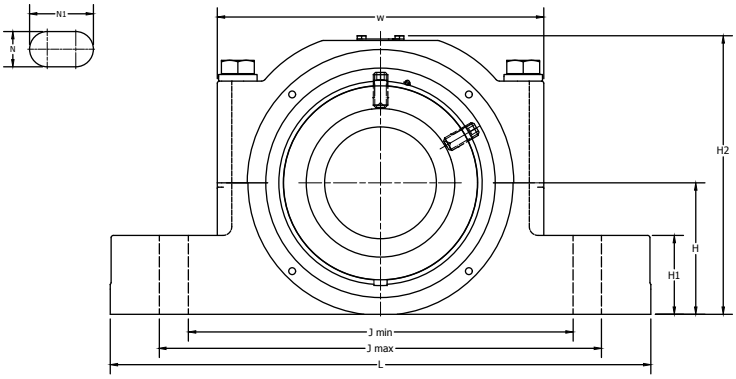

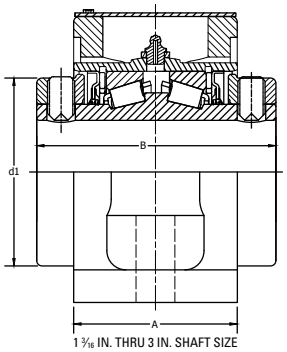

1 3/16 IN. THRU 3 IN. SHAFT SIZE

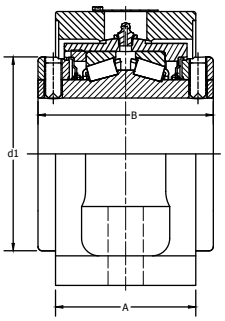

3 3/16 IN. THRU 3 1/2 IN. SHAFT SIZE

Shaft Dia.	Part No. Non-Expansion	Part No. Expansion	B	L	A	J min	J max	Bolt Dia.	N	N_1	H_1	H_2	d_1	H	W	Expansion	Approx. Wt.
mm in.			**mm** in.	**mm** in.	**mm** in.	**mm** in.	**mm** in.	**mm** in.	**mm** in.	**mm** in.	**mm** in.	**mm** in.	**mm** in.	**mm** in.	**mm** in.	**mm** in.	**kg** lbs.
2 11/16	SNSA-P2B-TRB-2 11/16	SNSA-P2B-TRB-2 11/16 E															
2 3/4	SNSA-P2B-TRB-2 3/4	SNSA-P2B-TRB-2 3/4 E															
2 15/16	SNSA-P2B-TRB-2 15/16	SNSA-P2B-TRB-2 15/16 E	**114.3**	**315.1**	**84.3**	**228.6**	**279.4**	**M20**	**21.0**	**46.4**	**35.0**	**183.8**	**119.9**	**95.0**	**190.5**	**14.2**	**17.5**
3	SNSA-P2B-TRB-3	SNSA-P2B-TRB-3 E	4 1/2	12 13/32	3 5/16	9	11	3/4	53/64	1 53/64	1 3/8	7 15/64	4 23/32	3 47/64	7 1/2	9/16	38.6
70 mm	SNSA-P2B-TRB-70MM	SNSA-P2B-TRB-70MME															
75 mm	SNSA-P2B-TRB-75MM	SNSA-P2B-TRB-75MME															
3 3/16	SNSA-P2B-TRB-3 3/16	SNSA-P2B-TRB-3 3/16 E															
3 1/4	SNSA-P2B-TRB-3 1/4	SNSA-P2B-TRB-3 1/4 E	**127.3**	**344.8**	**101.6**	**254.0**	**298.5**	**M20**	**21.0**	**43.3**	**38.8**	**203.1**	**140.5**	**100.0**	**236.5**	**14.2**	**27.4**
80 mm	SNSA-P2B-TRB-80MM	SNSA-P2B-TRB-80MME	5	13 37/64	4	10	11 3/4	3/4	53/64	1 45/64	1 17/32	8	5 17/32	3 15/16	9 5/16	9/16	60.5
85 mm	SNSA-P2B-TRB-85MM	SNSA-P2B-TRB-85MME	**127.3** 5	**344.8** 13 37/64	**101.6** 4	**254.0** 10	**298.5** 11 3/4	**M20** 3/4	**21.0** 53/64	**43.3** 1 45/64	**50.8** 2	**215.1** 8 15/32	**140.5** 5 17/32	**112.0** 4 13/32	**236.5** 9 5/16	**14.2** 9/16	**31.3** 69.0
3 7/16	SNSA-P2B-TRB-3 7/16	SNSA-P2B-TRB-3 7/16 E															
3 1/2	SNSA-P2B-TRB-3 1/2	SNSA-P2B-TRB-3 1/2 E	**127.3**	**406.4**	**101.6**	**276.2**	**350.8**	**M24**	**25.4**	**62.7**	**36.6**	**215.1**	**140.5**	**112.0**	**236.5**	**14.2**	**32.4**
90 mm	SNSA-P2B-TRB-90MM	SNSA-P2B-TRB-90MME	5	16	4	10 7/8	13 13/16	7/8	1	2 15/32	1 7/16	8 15/32	5 17/32	4 13/32	9 5/16	9/16	71.4
3 15/16	SNSA-P2B-TRB-3 15/16	SNSA-P2B-TRB-3 15/16 E															
4	SNSA-P2B-TRB-4	SNSA-P2B-TRB-4 E	**158.8**	**419.1**	**120.7**	**313.9**	**374.7**	**M24**	**25.4**	**55.6**	**50.4**	**236.9**	**154.0**	**125.0**	**256.4**	**14.2**	**47.0**
100 mm	SNSA-P2B-TRB-100MM	SNSA-P2B-TRB-100MME	6 1/4	16 1/2	4 3/4	12 23/64	14 3/4	7/8	1	2 3/16	2	9 21/64	6 1/16	4 59/64	10 3/32	9/16	103.7
110 mm	SNSA-P2B-TRB-110MM	SNSA-P2B-TRB-110MME	**171.5** 6 3/4	**410.0** 16 9/64	**129.4** 5 3/32	**313.9** 12 23/64	**356.0** 14 1/64	**M24** 7/8	**25.4** 1 1/16	**46.4** 1 53/64	**50.8** 2	**263.9** 10 25/64	**171.1** 6 47/64	**140.0** 5 33/64	**281.8** 11 3/32	**14.2** 9/16	**61.0** 134.4
4 7/16	SNSA-P2B-TRB-4 7/16	SNSA-P2B-TRB-4 7/16 E															
4 1/2	SNSA-P2B-TRB-4 1/2	SNSA-P2B-TRB-4 1/2 E	**171.5**	**466.7**	**129.4**	**362.0**	**412.8**	**M24**	**27.0**	**52.4**	**48.4**	**274.2**	**171.1**	**150.0**	**281.8**	**14.2**	**61.2**
115 mm	SNSA-P2B-TRB-115MM	SNSA-P2B-TRB-115MME	6 3/4	18 3/8	5 3/32	14 1/4	16 1/4	7/8	1 1/16	2 1/16	1 29/32	10 51/64	6 47/64	5 29/32	11 3/32	9/16	134.4
4 15/16	SNSA-P2B-TRB-4 15/16	SNSA-P2B-TRB-4 15/16 E															
5	SNSA-P2B-TRB-5	SNSA-P2B-TRB-5 E	**184.2**	**520.7**	**143.7**	**384.2**	**458.8**	**M30**	**33.3**	**70.6**	**48.4**	**294.8**	**196.9**	**150.0**	**323.1**	**14.2**	**82.6**
125 mm	SNSA-P2B-TRB-125MM	SNSA-P2B-TRB-125MME	7 1/4	20 1/2	5 21/32	15 1/8	18 1/16	1 1/4	1 5/16	2 25/32	1 29/32	11 39/64	7 3/4	5 29/32	12 23/32	9/16	182.2

TYPE SN 500 SELF-ALIGNING (SNSA) MOUNTED TAPERED ROLLER BEARING: FOUR-BOLT PILLOW BLOCK DOUBLE LOCKING COLLAR

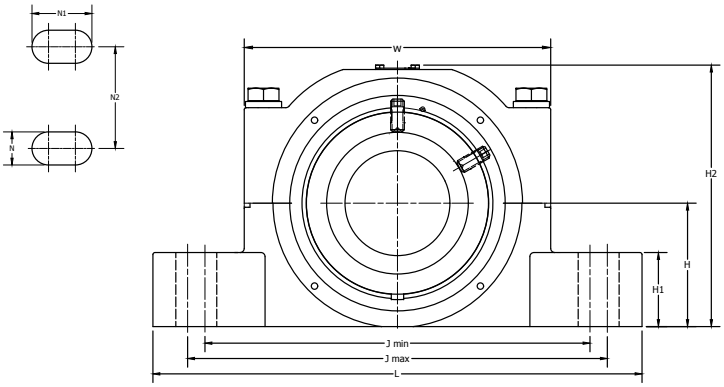

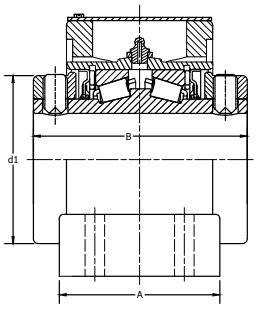

2 ¼ IN. THRU 3 IN. SHAFT SIZE

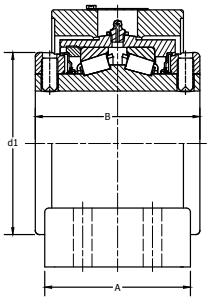

3 3/16 IN. THRU 5 IN. SHAFT SIZE

Shaft Dia.	Part No. Non-Expansion	Part No. Expansion	B	L	A	J min	J max	Bolt Dia.	N	N_1	N_2	H_1	H_2	d_1	H	W	Expansion	Approx. Wt.
mm in.			**mm** in.	**mm** in.	**mm** in.	**mm** in.	**mm** in.	**mm** in.	**mm** in.	**mm** in.	**mm** in.	**mm** in.	**mm** in.	**mm** in.	**mm** in.	**mm** in.	**mm** in.	**kg** lbs.
2 ¼	SNSA-P4B-TRB-2 ¼	SNSA-P4B-TRB-2 ¼ E	**101.6** 4	**261.9** 10 5/16	**88.9** 3 ½	**182.6** 7 3/16	**217.5** 8 9/16	**M16** ⅝	**17.5** 11/16	**34.9** 1 ⅜	**47.8** 1 ⅞	**38.9** 1 17/32	**160.7** 6 21/64	**103.1** 4 1/16	**80** 3 5/32	**162.7** 6 13/32	**14.2** 9/16	**12.8** 28.3
60 mm	SNSA-P4B-TRB-60MM	SNSA-P4B-TRB-60MME																
2 7/16	SNSA-P4B-TRB-2 7/16	SNSA-P4B-TRB-2 7/16 E																
2 ½	SNSA-P4B-TRB-2 ½	SNSA-P4B-TRB-2 ½ E	**101.6** 4	**275.0** 10 53/64	**88.9** 3 ½	**201.6** 7 15/16	**244.5** 9 ⅝	**M16** ⅝	**17.5** 11/16	**38.9** 1 17/32	**39.6** 1 9/16	**38.9** 1 17/32	**160.7** 6 21/64	**103.1** 4 1/16	**80** 3 5/32	**162.8** 6 13/32	**14.2** 9/16	**13.2** 29.1
65 mm	SNSA-P4B-TRB-65MM	SNSA-P4B-TRB-65MME																
2 11/16	SNSA-P4B-TRB-2 11/16	SNSA-P4B-TRB-2 11/16 E																
2 ¾	SNSA-P4B-TRB-2 ¾	SNSA-P4B-TRB-2 ¾ E	**114.3** 4 ½	**330.2** 13	**95.3** 3 ¾	**228.6** 9	**292.1** 11 ½	**M16** ⅝	**17.5** 11/16	**49.3** 1 15/16	**54.0** 2 ⅛	**47.8** 1 ⅞	**183.8** 7 15/64	**119.9** 4 23/32	**95** 3 ¾	**190.5** 7 ½	**14.2** 9/16	**17.7** 39.0
70 mm	SNSA-P4B-TRB-70MM	SNSA-P4B-TRB-70MME																
2 15/16	SNSA-P4B-TRB-2 15/16	SNSA-P4B-TRB-2 15/16 E																
3	SNSA-P4B-TRB-3	SNSA-P4B-TRB-3 E	**114.3** 4 ½	**320.7** 12 ⅝	**95.3** 3 ¾	**239.7** 9 7/16	**287.3** 11 5/16	**M16** ⅝	**17.5** 11/16	**41.3** 1 ⅝	**52.4** 2 1/16	**47.8** 1 ⅞	**183.8** 7 15/64	**119.9** 4 23/32	**95.3** 3 ¾	**190.5** 7 ½	**14.2** 9/16	**18.5** 40.9
75 mm	SNSA-P4B-TRB-75MM	SNSA-P4B-TRB-75MME																
3 3/16	SNSA-P4B-TRB-3 3/16	SNSA-P4B-TRB-3 3/16 E																
3 ¼	SNSA-P4B-TRB-3 ¼	SNSA-P4B-TRB-3 ¼ E	**127.0** 5	**344.8** 13 37/64	**114.3** 4 ½	**266.7** 10 ½	**298.5** 11 ¾	**M20** ⅝	**17.5** 11/16	**33.3** 1 5/16	**54.1** 2 ⅛	**45.2** 1 25/32	**203.1** 8	**140.5** 5 17/32	**100** 3 15/16	**236.5** 9 5/16	**14.2** 9/16	**29.5** 65.0
80 mm	SNSA-P4B-TRB-80MM	SNSA-P4B-TRB-80MME																
85 mm	SNSA-P4B-TRB-85MM	SNSA-P4B-TRB-85MME	**127.0** 5	**345.0** 13 37/64	**114.3** 4 ½	**282.7** 11 ⅛	**298.5** 11 ¾	**M16** ⅝	**17.5** 11/16	**25.4** 1	**50.0** 1 31/32	**50.8** 2	**215.1** 8 15/32	**140.5** 5 17/32	**112** 4 13/32	**236.5** 9 5/16	**14.2** 9/16	**30.0** 66.2

Continued on next page.

TYPE SAF 500 SELF-ALIGNING (SAFSA) MOUNTED TAPERED ROLLER BEARING: FOUR-BOLT PILLOW BLOCK DOUBLE LOCKING COLLAR

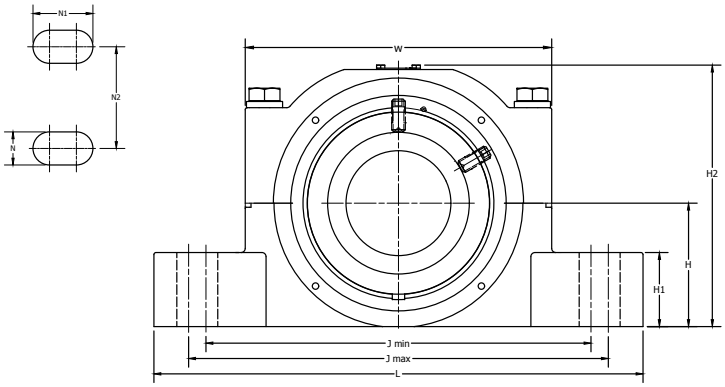

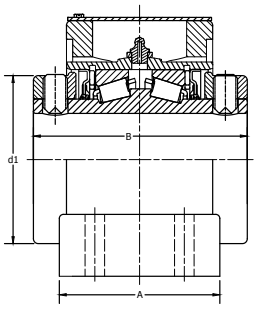

2 1/4 IN. THRU 3 IN. SHAFT SIZE

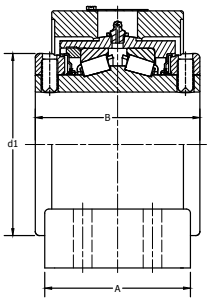

3 3/16 IN. THRU 5 IN. SHAFT SIZE

Shaft Dia.	Part No. Non-Expansion	Part No. Expansion	B	L	A	J min	J max	Bolt Dia.	N	N_1	N_2	H_1	H_2	d_1	H	W	Expansion	Approx. Wt.
mm in.			**mm** in.	**mm** in.	**mm** in.	**mm** in.	**mm** in.	**mm** in.	**mm** in.	**mm** in.	**mm** in.	**mm** in.	**mm** in.	**mm** in.	**mm** in.	**mm** in.	**mm** in.	**kg** lbs.
3 7/16	SNSA-P4B-TRB-3 7/16	SNSA-P4B-TRB-3 7/16 E																
3 1/2	SNSA-P4B-TRB-3 1/2	SNSA-P4B-TRB-3 1/2 E	**127.0** 5	**381.0** 15	**114.3** 4 1/2	**276.2** 10 7/8	**339.7** 13 3/8	**M20** 3/4	**21.0** 53/64	**52.8** 2 5/64	**60.3** 2 3/8	**48.5** 1 29/32	**215.1** 8 15/32	**140.5** 5 17/32	**112** 4 13/32	**236.5** 9 5/16	**14.2** 9/16	**29.3** 64.6
90 mm	SNSA-P4B-TRB-90MM	SNSA-P4B-TRB-90MME																
3 15/16	SNSA-P4B-TRB-3 15/16	SNSA-P4B-TRB-3 15/16 E																
4	SNSA-P4B-TRB-4	SNSA-P4B-TRB-4 E	**158.8** 6 1/4	**419.1** 16 1/2	**120.7** 4 3/4	**301.6** 11 7/8	**374.7** 14 3/4	**M20** 3/4	**25.4** 1	**61.9** 2 7/16	**69.9** 2 3/4	**50.3** 1 31/32	**236.9** 9 21/64	**154.0** 6 1/16	**125** 4 59/64	**256.4** 10 3/32	**14.2** 9/16	**46.6** 102.8
100 mm	SNSA-P4B-TRB-100MM	SNSA-P4B-TRB-100MME																
110 mm	SNSA-P4B-TRB-110MM	SNSA-P4B-TRB-110MME	**171.5** 6 3/4	**410** 16 9/64	**146.1** 5 3/4	**342.9** 13 1/2	**356.0** 14 1/64	**M24** 1	**25.4** 1	**32.0** 1 1/4	**70.2** 2 49/64	**50.8** 2	**263.9** 10 25/64	**171.1** 6 47/64	**140** 5 33/64	**281.8** 11 3/32	**14.2** 9/16	**55.0** 121.3
4 7/16	SNSA-P4B-TRB-4 7/16	SNSA-P4B-TRB-4 7/16 E																
4 1/2	SNSA-P4B-TRB-4 1/2	SNSA-P4B-TRB-4 1/2 E	**171.5** 6 3/4	**466.7** 18 3/8	**129.4** 5 3/32	**362.0** 14 1/4	**412.8** 16 1/4	**M24** 1	**27.0** 1 1/16	**52.4** 2 1/16	**82.6** 3 1/4	**48.4** 1 29/32	**274.2** 10 51/64	**171.1** 6 47/64	**150** 5 29/32	**281.8** 11 3/32	**14.2** 9/16	**51.7** 114.0
115 mm	SNSA-P4B-TRB-115MM	SNSA-P4B-TRB-115MME																
4 15/16	SNSA-P4B-TRB-4 15/16	SNSA-P4B-TRB-4 15/16 E																
5	SNSA-P4B-TRB-5	SNSA-P4B-TRB-5 E	**184.2** 7 1/4	**520.7** 20 1/2	**143.7** 5 21/32	**384.2** 15 1/8	**408.0** 16 1/16	**M24** 1	**27.0** 1 1/16	**64.3** 2 17/32	**85.7** 3 3/8	**42.1** 1 21/32	**294.9** 11 39/64	**196.9** 7 3/4	**150** 5 29/32	**323.1** 12 23/32	**14.2** 9/16	**82.7** 182.2
125 mm	SNSA-P4B-TRB-125MM	SNSA-P4B-TRB-125MME																

SELF-ALIGNING MOUNTED TAPERED ROLLER BEARING CARTRIDGES SINGLE LOCKING COLLAR

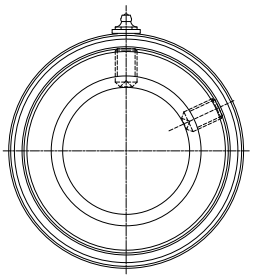

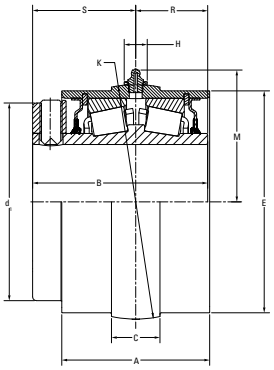

1 3/16 IN. THRU 3 IN. SHAFT SIZE

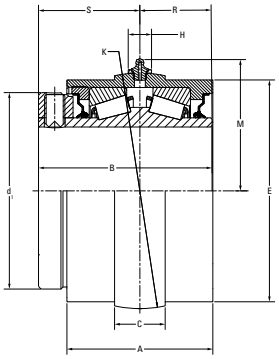

3 3/16 IN. THRU 4 15/16 IN. SHAFT SIZE

Shaft Dia.	Cartridge Housing Part No.	B	A	C	E	K ±0.0127 ±0.0005	d1	S	R	M	H
mm in.		**mm** in.	**mm** in.	**mm** in.	**mm** in.	**mm** in.	**mm** in.	**mm** in.	**mm** in.	**mm** in.	**mm** in.
1 3/16	CSAA-TRB-1 3/16	**60.3** 2 3/8	**47.6** 1 7/8	**14.3** 9/16	**63.5** 2 1/2	**66.98** 2.6370	**54.8** 2 5/32	**34.9** 1 3/8	**25.4** 1	**46.0** 1 13/16	**16.7** 21/32
1 1/4	CSAA-TRB-1 1/4										
1 3/8	CSAA-TRB-1 3/8	**64.3** 2 17/32	**54.0** 2 1/8	**15.9** 5/8	**77.0** 3 1/32	**81.28** 3.200	**68.3** 2 11/16	**38.1** 1 1/2	**26.2** 1 1/32	**53.2** 2 3/32	**16.7** 21/32
1 7/16	CSAA-TRB-1 7/16										
35 mm	CSAA-TRB-35MM										
1 1/2	CSAA-TRB-1 1/2	**72.2** 2 27/32	**60.3** 2 3/8	**19.1** 3/4	**88.9** 3 1/2	**93.78** 3.692	**85.7** 3 3/8	**42.9** 1 11/16	**29.3** 1 5/32	**57.9** 2 9/32	**16.7** 21/32
1 5/8	CSAA-TRB-1 5/8										
1 11/16	CSAA-TRB-1 11/16										
40 mm	CSAA-TRB-40MM										
1 3/4	CSAA-TRB-1 3/4	**75.0** 2 61/64	**63.5** 2 1/2	**20.6** 13/16	**95.3** 3 3/4	**100.71** 3.9650	**84.9** 3 11/32	**44.5** 1 3/4	**30.5** 1 13/64	**61.1** 2 13/32	**16.7** 21/32
1 7/8	CSAA-TRB-1 7/8										
1 15/16	CSAA-TRB-1 15/16										
2	CSAA-TRB-2										
45 mm	CSAA-TRB-45MM										
50 mm	CSAA-TRB-50MM										
2 3/16	CSAA-TRB-2 3/16	**79.4** 3 1/8	**66.7** 2 5/8	**21.4** 27/32	**107.2** 4 7/32	**112.73** 4.438	**95.3** 3 3/4	**47.6** 1 7/8	**31.4** 1 15/64	**66.7** 2 5/8	**16.7** 21/32
55 mm	CSAA-TRB-55MM										
2 1/4	CSAA-TRB-2 1/4	**84.1** 3 5/16	**73.0** 2 7/8	**21.4** 27/32	**115.9** 4 9/16	**121.44** 4.781	**100.0** 3 15/16	**50.8** 2	**33.3** 1 5/16	**73.0** 2 7/8	**16.7** 21/32
2 7/16	CSAA-TRB-2 7/16										
2 1/2	CSAA-TRB-2 1/2										
60 mm	CSAA-TRB-60MM										
65 mm	CSAA-TRB-65MM										

Continued on next page.

SELF-ALIGNING MOUNTED TAPERED ROLLER BEARING CARTRIDGES SINGLE LOCKING COLLAR

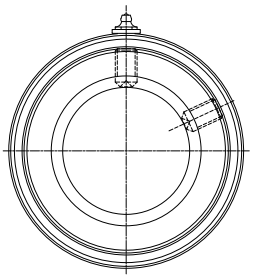

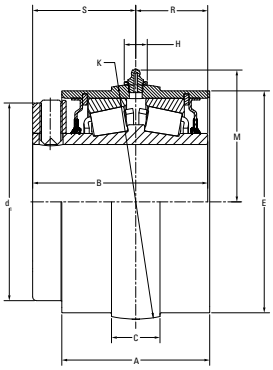

1 3/16 IN. THRU 3 IN. SHAFT SIZE

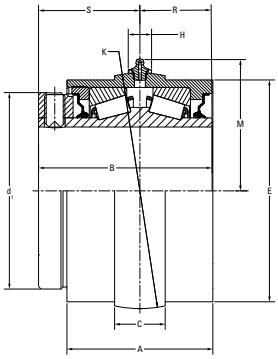

3 3/16 IN. THRU 4 15/16 IN. SHAFT SIZE

Shaft Dia.	Cartridge Housing Part No.	B	A	C	E	K ±0.0127 ±0.0005	d1	S	R	M	H
mm in.		**mm** in.	**mm** in.	**mm** in.	**mm** in.	**mm** in.	**mm** in.	**mm** in.	**mm** in.	**mm** in.	**mm** in.
2 11/16	CSAA-TRB-2 11/16										
2 3/4	CSAA-TRB-2 3/4										
2 15/16	CSAA-TRB-2 15/16	**93.7**	**76.2**	**24.6**	**131.0**	**137.99**	**116.7**	**57.2**	**36.5**	**79.4**	**16.7**
3	CSAA-TRB-3	3 11/16	3	31/32	5 5/32	5.4325	4 19/32	2 1/4	1 7/16	3 1/8	21/32
70 mm	CSAA-TRB-70MM										
75 mm	CSAA-TRB-75MM										
3 3/16	CSAA-TRB-3 3/16										
3 1/4	CSAA-TRB-3 1/4										
3 7/16	CSAA-TRB-3 7/16										
3 1/2	CSAA-TRB-3 1/2	**106.4**	**88.9**	**28.6**	**160.3**	**167.49**	**140.5**	**63.5**	**42.9**	**94.5**	**16.7**
80 mm	CSAA-TRB-80MM	4 3/16	3 1/2	1 1/8	6 5/16	6.594	5 17/32	2 1/2	1 11/16	3 23/32	21/32
85 mm	CSAA-TRB-85MM										
90 mm	CSAA-TRB-90MM										
3 15/16	CSAA-TRB-3 15/16	**133.4**	**114.3**	**39.7**	**173.8**	**184.51**	**154.0**	**79.4**	**54.0**	**103.2**	**18.3**
4	CSAA-TRB-4	5 1/4	4 1/2	1 9/16	6 27/32	7.264	6 1/16	3 1/8	2 1/8	4 1/16	23/32
100 mm	CSAA-TRB-100MM										
4 7/16	CSAA-TRB-4 7/16										
4 1/2	CSAA-TRB-4 1/2	**142.9**	**117.5**	**41.3**	**192.1**	**203.20**	**171.1**	**85.7**	**57.2**	**111.9**	**18.3**
110 mm	CSAA-TRB-100MM	5 5/8	4 5/8	1 5/8	7 9/16	8	6 47/64	3 3/8	2 1/4	4 13/32	23/32
115 mm	CSAA-TRB-115MM										
4 15/16	CSAA-TRB-4 15/16										
5	CSAA-TRB-5	**158.0**	**130.2**	**47.6**	**223.0**	**235.97**	**196.9**	**65.9**	**97.8**	**130.2**	**18.3**
125 mm	CSAA-TRB-125MM	6 7/32	5 1/8	1 7/8	8 25/32	9.29	7 3/4	2 19/32	3 55/64	5 1/8	23/32

SELF-ALIGNING MOUNTED TAPERED ROLLER BEARING CARTRIDGES DOUBLE LOCKING COLLAR

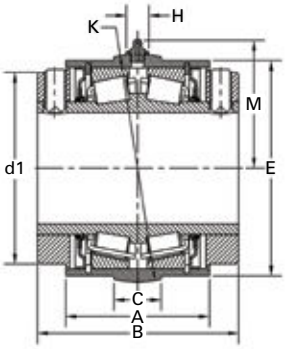

FROM SIZE 1 3/16″ TO 3″

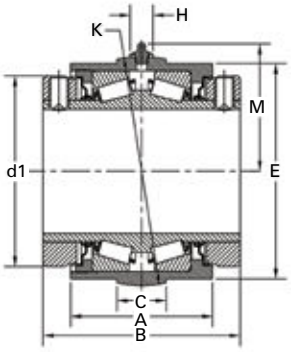

FROM SIZE 3 3/16″ TO 4 15/16″

Shaft Dia.	Cartridge Housing Part No.	B	A	C	E	K ±0.0127 ±0.0005	d1	M	H
mm in.		**mm** in.	**mm** in.	**mm** in.	**mm** in.	**mm** in.	**mm** in.	**mm** in.	**mm** in.
1 3/16	CSA-TRB-1 3/16	**69.9** 2 3/4	**47.6** 1 7/8	**14.3** 9/16	**63.5** 2 1/2	**66.98** 2.6370	**54.8** 2 5/32	**46.0** 1 13/16	**16.7** 21/32
1 1/4	CSA-TRB-1 1/4								
1 3/8	CSA-TRB-1 3/8	**76.2** 3	**54.0** 2 1/8	**15.9** 5/8	**77.0** 3 1/32	**81.28** 3.200	**68.3** 2 11/16	**53.2** 2 3/32	**16.7** 21/32
1 7/16	CSA-TRB-1 7/16								
35 mm	CSA-TRB-35MM								
1 1/2	CSA-TRB-1 1/2	**85.9** 3 3/8	**60.3** 2 3/8	**19.1** 3/4	**88.9** 3 1/2	**93.78** 3.692	**85.7** 3 3/8	**57.9** 2 9/32	**16.7** 21/32
1 5/8	CSA-TRB-1 5/8								
1 11/16	CSA-TRB-1 11/16								
40 mm	CSA-TRB-40MM								
1 3/4	CSA-TRB-1 3/4	**88.9** 3 1/2	**63.5** 2 1/2	**20.6** 13/16	**95.3** 3 3/4	**100.71** 3.9650	**84.9** 3 11/32	**61.1** 2 13/32	**16.7** 21/32
1 7/8	CSA-TRB-1 7/8								
1 15/16	CSA-TRB-1 15/16								
2	CSA-TRB-2								
45 mm	CSA-TRB-45MM								
50 mm	CSA-TRB-50MM								
2 3/16	CSA-TRB-2 3/16	**95.3** 3 3/4	**66.7** 2 5/8	**21.4** 27/32	**107.2** 4 7/32	**112.73** 4.438	**95.3** 3 3/4	**66.7** 2 5/8	**16.7** 21/32
55 mm	CSA-TRB-55MM								
2 1/4	CSA-TRB-2 1/4	**101.6** 4	**73.0** 2 7/8	**21.4** 27/32	**115.9** 4 9/16	**121.44** 4.781	**100.0** 3 15/16	**73.0** 2 7/8	**16.7** 21/32
2 7/16	CSA-TRB-2 7/16								
2 1/2	CSA-TRB-2 1/2								
60 mm	CSA-TRB-60MM								
65 mm	CSA-TRB-65MM								
2 11/16	CSA-TRB-2 11/16	**114.3** 4 1/2	**76.2** 3	**24.6** 31/32	**131.0** 5 5/32	**137.99** 5.4325	**116.7** 4 19/32	**79.4** 3 1/8	**16.7** 21/32
2 3/4	CSA-TRB-2 3/4								
2 15/16	CSA-TRB-2 15/16								
3	CSA-TRB-3								
70 mm	CSA-TRB-70MM								
75 mm	CSA-TRB-75MM								

Continued on next page.

SELF-ALIGNING MOUNTED TAPERED ROLLER BEARING CARTRIDGES DOUBLE LOCKING COLLAR

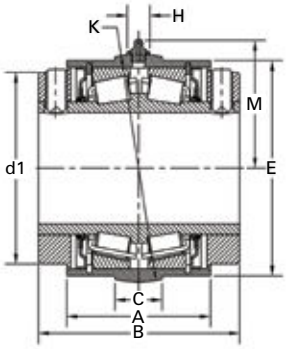

FROM SIZE 1 3/16″ TO 3″

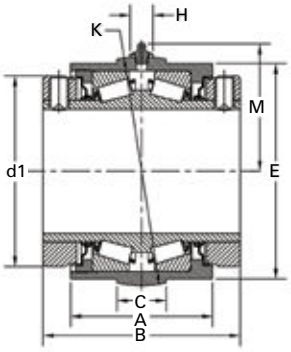

FROM SIZE 3 3/16″ TO 4 15/16″

Shaft Dia.	Cartridge Housing Part No.	B	A	C	E	K ±0.0127 ±0.0005	d1	M	H
mm in.		**mm** in.	**mm** in.	**mm** in.	**mm** in.	**mm** in.	**mm** in.	**mm** in.	**mm** in.
3 3/16	CSA-TRB-3 3/16	**127.0** 5	**88.9** 3 1/2	**28.6** 1 1/8	**160.3** 6 5/16	**167.49** 6.594	**140.5** 5 17/32	**94.5** 3 23/32	**16.7** 21/32
3 1/4	CSA-TRB-3 1/4								
3 7/16	CSA-TRB-3 7/16								
3 1/2	CSA-TRB-3 1/2								
80 mm	CSA-TRB-80MM								
85 mm	CSA-TRB-85MM								
90 mm	CSA-TRB-90MM								
3 15/16	CSA-TRB-3 15/16	**158.8** 6 1/4	**114.3** 4 1/2	**39.7** 1 9/16	**173.8** 6 27/32	**184.51** 7.264	**154.0** 6 1/16	**103.2** 4 1/16	**18.3** 23/32
4	CSA-TRB-4								
100 mm	CSA-TRB-100MM								
4 7/16	CSA-TRB-4 7/16	**171.5** 6 3/4	**117.5** 4 5/8	**41.3** 1 5/8	**192.1** 7 9/16	**203.20** 8	**171.1** 6 47/64	**111.9** 4 13/32	**18.3** 23/32
4 1/2	CSA-TRB-4 1/2								
110 mm	CSA-TRB-110MM								
115 mm	CSA-TRB-115MM								
4 15/16	CSA-TRB-4 15/16	**184.2** 7 1/4	**130.2** 5 1/8	**47.6** 1 7/8	**223.0** 8 25/32	**235.97** 9.29	**196.9** 7 3/4	**130.2** 5 1/8	**18.3** 23/32
5	CSA-TRB-5								
125 mm	CSA-TRB-125MM								

SELF-ALIGNING MOUNTED TAPERED ROLLER BEARING SECONDARY COVERS

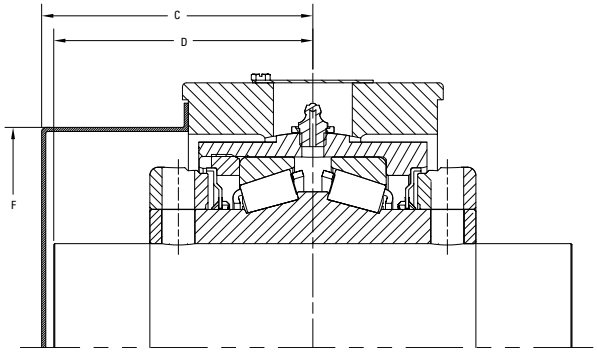

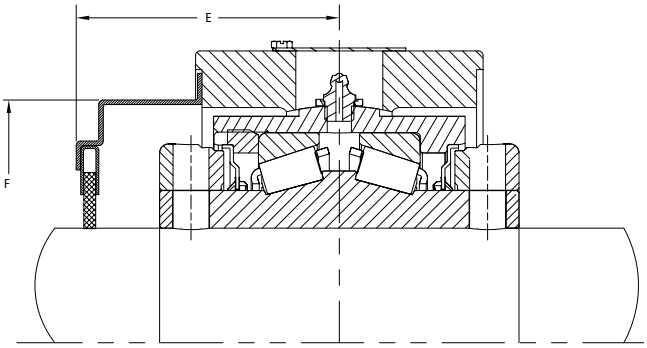

Shaft Dia.	Cover Part No.	Steel Cover Dimension					
		A	B	C	D	E	F
mm in.		**mm** in.	**mm** in.	**mm** in.	**mm** in.	**mm** in.	**mm** in.
Closed 1 3/16 1 1/4	ESASC-A ESAST-1 3/16 ESAST-1 1/4	**112.9** 4 7/16	**121.9** 4 13/16	**65.5** 2 19/32	**61.8** 2 13/32	**56.5** 2 7/32	**74.7** 2 15/16
Closed 1 3/8 1 7/16 **35 mm**	ESASC-B ESAST-1 3/8 ESAST-1 7/16 ESAST-35MME	**120.8** 4 3/4	**135.7** 5 11/32	**75.3** 2 31/32	**71.2** 2 13/16	**60.4** 2 3/8	**89.7** 3 17/32
Closed 1 1/2 1 5/8 1 11/16 **40 mm**	ESASC-C ESAST-1 1/2 ESAST-1 5/8 ESAST-1 11/16 ESAST-40MME	**119.9** 4 23/32	**143.7** 5 21/32	**83.7** 3 5/16	**79.7** 3 1/8	**60.0** 2 3/8	**103.6** 4 1/16
Closed 1 3/4 1 7/8 1 15/16 2 **45 mm** **50 mm**	ESASC-D ESAST-1 3/4 ESAST-1 7/8 ESAST-1 15/16 ESAST-2 ESAST-45MME ESAST-50MME	**124.3** 4 29/32	**148.0** 5 13/16	**85.9** 3 3/8	**81.8** 3 7/32	**62.1** 2 7/16	**103.6** 4 1/16
Closed 2 3/16 **55 mm**	ESASC-E ESAST-2 3/16 ESAST-55MME	**139.6** 5 1/2	**157.1** 6 3/16	**87.3** 3 7/16	**83.2** 3 9/32	**69.8** 2 3/4	**116.0** 4 9/16
Closed 2 1/4 2 7/16 2 1/2 **60 mm** **65 mm**	ESASC-F ESAST-2 1/4 ESAST-2 7/16 ESAST-2 1/2 ESAST-60MME ESAST-65MME	**131.5** 5 3/16	**153.4** 6 1/32	**87.7** 3 7/16	**83.6** 3 9/32	**65.8** 2 19/32	**132.1** 5 3/16

Continued on next page.

SELF-ALIGNING MOUNTED TAPERED ROLLER BEARING SECONDARY COVERS

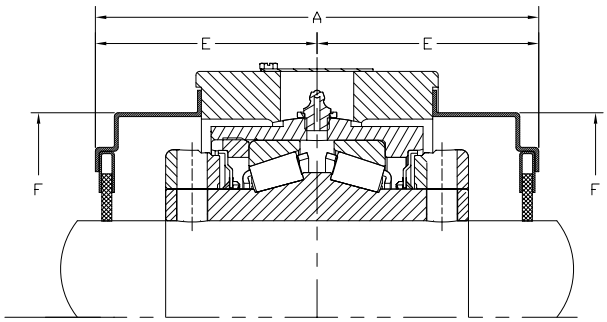

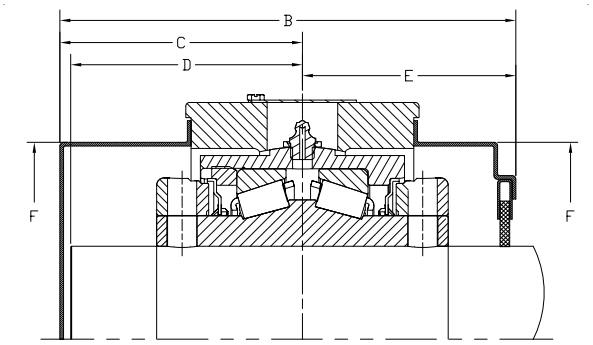

Shaft Dia.	Cover Part No.	Steel Cover Dimension					
		A	B	C	D	E	F
mm in.		**mm** in.	**mm** in.	**mm** in.	**mm** in.	**mm** in.	**mm** in.
Closed	ESASC-1						
2 11/16	ESAST-2 11/16						
2 3/4	ESAST-2 3/4	**164.3**	**187.5**	**105.3**	**101.3**	**82.2**	**139.5**
2 15/16	ESAST-2 15/16						
3	ESAST-3	6 15/32	7 3/8	4 5/32	4	3 1/4	5 1/2
70 mm	ESAST-70MM						
75 mm	ESAST-75MM						
Closed	ESASC-H						
3 3/16	ESAST-3 3/16						
3 1/4	ESAST-3 1/4						
3 7/16	ESAST-3 7/16	**186.4**	**199.1**	**105.9**	**101.9**	**93.2**	**171.5**
3 1/2	ESAST-3 1/2	7 11/32	7 13/16	4 5/32	4	3 21/32	6 3/4
80 mm	ESAST-80MME						
85 mm	ESAST-85MME						
90 mm	ESAST-90MME						
Closed	ESASC-I						
3 15/16	ESAST-3 15/16	**205.2**	**218.3**	**115.1**	**111.3**	**102.4**	**186.9**
4	ESAST-4	8 3/32	8 19/32	4 17/32	4 3/8	4 1/32	7 3/8
100 mm	ESAST-100MM						
Closed	ESASC-J						
4 7/16	ESAST-4 7/16	**236.0**	**259.6**	**115.9**	**137.3**	**118.0**	**208.8**
4 1/2	ESAST-4 1/2						
110 mm	ESAST-110MM	9 9/32	10 7/32	4 9/16	5 13/32	4 21/32	8 8/32
115 mm	ESAST-115MM						
Closed	ESASC-K						
4 15/16	ESAST-4 15/16	**253.4**	**266.4**	**139.7**	**135.7**	**126.7**	**239.5**
5	ESAST-5	9 31/32	10 1/2	5 1/2	5 11/32	5	9 7/16
125 mm	ESAST-125MM						
Closed	ESASC-L						
5 7/16	ESAST-5 7/16						
5 1/2	ESAST-5 1/2						
5 15/16	ESAST-5 15/16	**273.8**	**284.21**	**147.3**	**138.2**	**136.9**	**295.3**
6	ESAST-6	10 25/32	11 3/16	5 13/16	5 7/16	5 3/8	11 5/8
135 mm	ESAST-135MM						
140 mm	ESAST-140MM						
150 mm	ESAST-150MM						
Closed	ESASC-M						
6 7/16	ESAST-6 7/16						
6 1/2	ESAST-6 1/2	**315.7**	**315.7**	**157.9**	**147.9**	**157.9**	**346.1**
6 15/16	ESAST-6 15/16						
7	ESAST-7	11 13/32	11 13/32	6 7/32	5 13/16	6 7/32	13 5/8
170 mm	ESAST-170MM						
180 mm	ESAST-180MM						

NOTES

11-25 Order No. 11477 | Timken® is a registered trademark of The Timken Company. | © 2025 The Timken Company | Printed in U.S.A.

To view more Timken catalogs, go to www.timken.com/catalogs for interactive versions, or to download a catalog app for your smart phone or mobile device scan the QR code or go to timkencatalogs.squawqr.com.

TIMKEN

The Timken team applies their know-how to improve the reliability and performance of machinery in diverse markets worldwide. The company designs, makes and markets bearings, gear drives, automated lubrication systems, belts, brakes, clutches, chain, couplings, linear motion products and related industrial motion rebuild and repair services.

Price: USD $75

Stronger. By Design.

www.timken.com