TIMKEN



TIMKEN® SOLID-BLOCK MOUNTED SPHERICAL ROLLER BEARINGS



ABOUT THE TIMKEN COMPANY

The Timken Company designs a growing portfolio of engineered bearings and industrial motion products. With more than a century of knowledge and innovation, we continuously improve the reliability and efficiency of global machinery and equipment to move the world forward.

With one common global quality system across all manufacturing plants, we deliver consistent product performance and reliability anywhere in the world.

As a Timken customer, you are connected to a team of application, sales and on-site service engineers who help solve unique equipment challenges resulting in extended uptime, productivity and efficiency.

To view more Timken catalogs, go to **www.timken.com/catalogs** for interactive versions, or to download our catalog app to your smartphone or mobile device.



TIMKEN® SOLID-BLOCK MOUNTED SPHERICAL ROLLER BEARING CATALOG INDEX

INTRODUCTION 2
HOW TO USE THIS CATALOG 6
SHELF LIFE/ STORAGE 7
WARNINGS 8

ENGINEERING

Nomenclature 10
Locking Styles 15
Seal and Cover Options 16
Bearing Loads 34
Normal Speed Ratings for Seals 57
Internal Radial Clearances 63
Shafting 65
Lubrication 67
Misalignment 67
Installation Guides 68

SOLID-BLOCK MOUNTED SPHERICAL ROLLER BEARINGS

V-Lock® Series (taper lock) 89
CL Series (concentric [set screw] lock) 137
EC Series (eccentric lock) 181
TA/DV TAA/DAA Series (tapered adapter lock) 211
Take-Up Frames 257

Index 264

INTRODUCTION

When your equipment faces harsh environments, you need mounted roller bearings that are rugged enough to withstand tough conditions and deliver exceptional performance.

You gain both with Timken® solid-block mounted spherical roller bearings.

Designed specifically to perform under extreme conditions, Timken solid-block mounted bearings are able to accept a total of 1.5 degrees misalignment and withstand the impact of falling debris. Additional misalignment can be accommodated for applications with lighter loads, contact your Timken engineer for details. Made of cast-steel housings and Timken double-row spherical roller bearings, their unique sealing design offers protection from contaminants.

Increased performance and durability help decrease the overall cost of ownership.

CUSTOMIZABLE DESIGN FEATURES TO FIT YOUR EQUIPMENT

With a full line of precision-made shaft-locking styles, seals and housings, it's easy to find the right mounted bearing to fit your application. Timken solid-block mounted spherical roller bearings interchange with a wide range of mounted roller bearings. Choose from many primary and secondary sealing mechanisms, and you decide how it's built without paying custom charges.

HOUSING STYLES

- Two-bolt pillow blocks
- Four-bolt pillow blocks
- Flange blocks
- Piloted flanges
- Take-up blocks
- Cartridge units
- Hanger blocks

LOCKING STYLES

- Eccentric lock
- Concentric lock (set screw) – single or double collar
- Tapered adapter lock – single or double nut
- V-Lock® tapered lock – single or double nut

SEALS

- Labyrinth seals – DuPont™ Teflon®:
  - High-speed applications
  - Superior in dirty and wet conditions
  - Able to operate at high temperatures
  - Resistant to most chemicals
  - Abrasion-resistant
- Triple-lip seals – nitrile:
  - Self-purging
  - Excellent in dirty and wet applications
  - Chemical- and corrosion-resistant
- Triple-lip seals – urethane:
  - All the benefits of nitrile, plus resistance to abrasion

SECONDARY SEALS

- Closed-end covers
- Open-end covers with:
  - Triple-lip seal
  - DuPont Teflon
  - V-ring seal
- Piloted-flange cartridge backing plates with:
  - Triple-lip seal
- Flange block backing plates with V-ring seal or Teflon seal

HOUSING COATINGS

- Powder coating – standard
- Nickel plating – optional
- Fluoropolymer coating – optional



Fig. 1. Two-bolt pillow block.



Fig. 2. Four-bolt pillow block.

OUTLASTING THE COMPETITION

Timken solid-block mounted bearings last a long time, yet you don't pay extra for reliability. Experience an increase in performance and durability and a decrease in your overall cost of ownership when you use a Timken solid-block mounted bearing.

STANDS UP TO HARSH CONDITIONS

Protects Bearing. Harsh operating environments and lubrication issues often lead to mounted bearing damage. Timken solid-block mounted bearings multiply protection with primary and secondary seal options, as well as steel covers in sizes to fit these units. The space between the primary and secondary seals offers a fillable grease cavity for more protection.

Handles Misalignment. Without a properly aligned shaft, the life expectancy of most mounted bearings decreases. However, Timken solid-block mounted spherical roller bearings accept a total of 1.5 degrees of misalignment, thanks to their unique design and Timken spherical roller bearings. Additional misalignment can be accommodated for applications with lighter loads, contact your Timken engineer for details.



Fig. 3. Flange block.



Fig. 4. Take-up block.



Fig. 5. Piloted-flange cartridge.



Fig. 6. Cartridge block.

INDUSTRIES AND APPLICATIONS

- Metal mills
- Aggregate and cement
- Mining
- Power generation
- Sawmills and other forest process industries
- Pulp and paper
- Material conveying
- Commercial and industrial building equipment
- Sugar mills
- Agriculture
- Waste management and water treatment
- Off-highway and construction vehicles
- HVAC, fans and blowers
- Cranes, lifts and hoists

DEPENDABLE SERVICE

Every Timken solid-block mounted spherical roller bearing is backed by the service of our industry-leading experts who are ready to assist you with product design, application knowledge and field engineering support – anything you need to help improve uptime and maximize equipment performance.

SOLID-BLOCK MOUNTED BEARING BENEFITS

Depending on how you configure your bearing for a specific application, there's a wide range of product benefits.

- Multiple available sizes accommodate shaft diameters from 35 mm to 380 mm (1 7⁄16 in. to 15 in.).
- Efficient built-to-order manufacturing. Quick delivery of customized configurations for specific applications.
- Quicker installation. Machined feet, tapped puller holes, black oxide inner rings and multiple shaft-locking choices make it simpler to install this heavy-duty unit.
- Improved performance in high-contaminant environments. Wide selection of primary and secondary seals, as well as auxiliary covers.
- Bidirectional shaft expansion. Double-nut housing feature allows expansion in both directions.
- Increased uptime. Robust steel housing, a wide variety of seal choices and a high-performance Timken spherical roller bearing result in increased unit uptime.
- Increased shaft holding power and reduced shaft damage. Eccentric lock series is designed to stay tight in reversing applications on precision-ground shafts.
- Fewer misalignment issues. Bearings accept up to 1.5 degrees of misalignment.
- Protection against over-lubrication. Pressure relief valves come standard when unit is ordered with non-purgeable seals.
- Dimensionally interchanges with a wide range of other mounted roller bearing units.
- One-time shaft alignment on all mounted bearing styles. Machined feet ends allow for precise installation and blocking for faster future unit replacement.
- Easier removal with standard withdrawal holes on all piloted-flange units.
- Faster and easier changeover thanks to a comprehensive product offering that interchanges with virtually all solid-block roller bearing units.

SOLID-BLOCK MOUNTED BEARING DESIGN

Flexibility through interchangeable components.

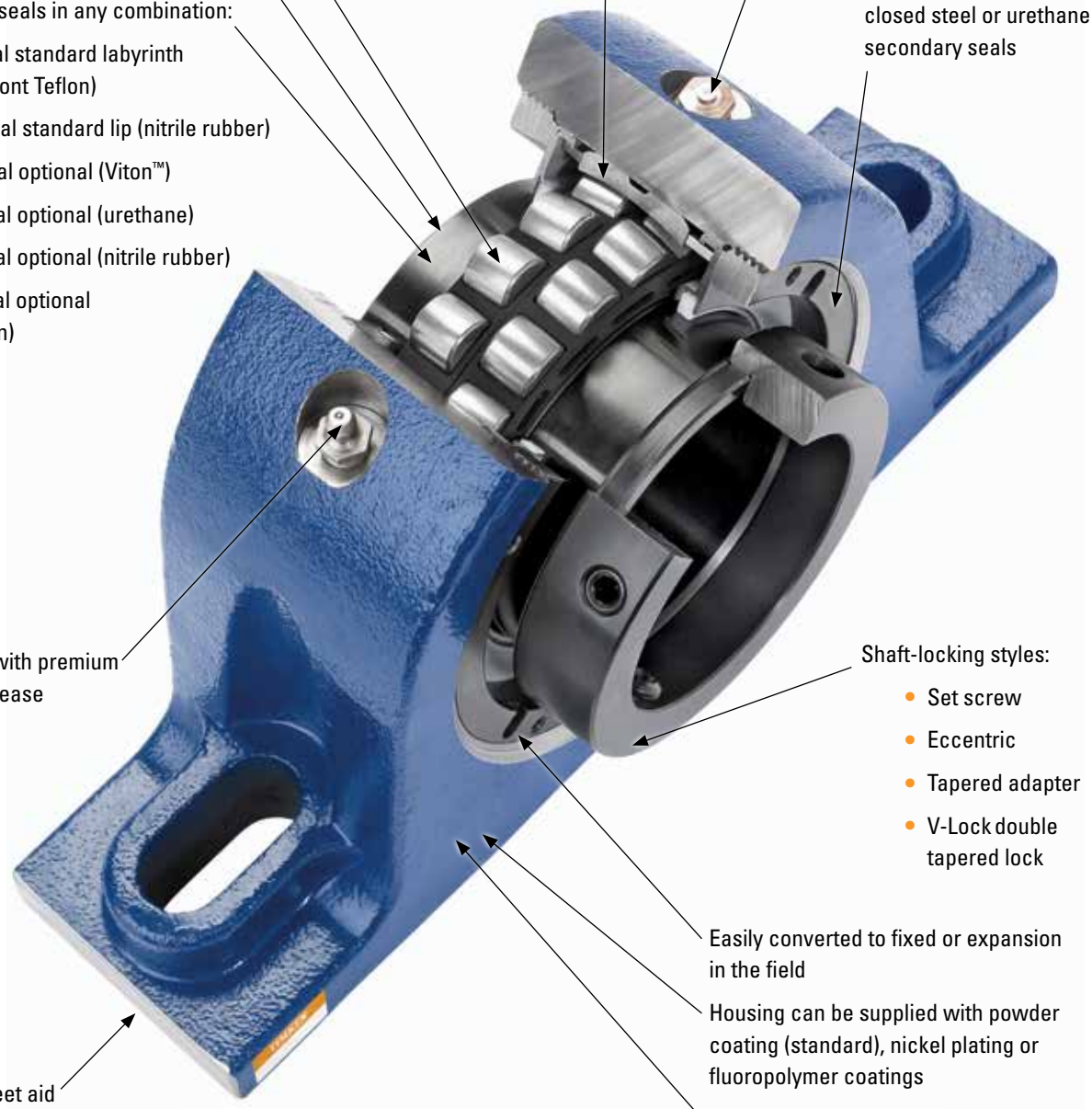

Fig. 7. High performance plus superior ruggedness.

HOW TO USE THIS CATALOG

We designed this catalog to help you find the Timken solid-block mounted spherical roller bearings best suited to your specifications.

Timken offers an extensive range of bearings and accessories in both imperial and metric sizes. For your convenience, size ranges are indicated in millimeters and inches. Contact your Timken engineer to learn more about our complete line for the special needs of your application.

This publication contains dimensions, tolerances and load ratings, as well as engineering sections describing fitting practices for shafts and housings, internal clearances, materials and other bearing features. It provides valuable assistance in the initial consideration of the type and characteristics of the bearings that may best suit your particular needs.

ISO and ANSI/ABMA, as used in this publication, refer to the International Organization for Standardization and the American National Standards Institute/American Bearing Manufacturers Association.



SHELF LIFE AND STORAGE OF GREASE-LUBRICATED BEARINGS AND COMPONENTS

To help you get the most value from our products, Timken provides guidelines for the shelf life of grease-lubricated ball and roller bearings, components and assemblies. Shelf life information is based on Timken and industry test data and experience.

SHELF LIFE

Shelf life should be distinguished from lubricated bearing/component design life as follows:

Shelf life of the grease-lubricated bearing/component represents the period of time prior to use or installation.

The shelf life is a portion of the anticipated aggregate design life. It is impossible to accurately predict design life due to variations in lubricant bleed rates, oil migration, operating conditions, installation conditions, temperature, humidity and extended storage.

TIMKEN IS NOT RESPONSIBLE FOR THE SHELF LIFE OF ANY BEARING/COMPONENT LUBRICATED BY ANOTHER PARTY.

European REACH compliance

Timken lubricants, greases and similar products sold in standalone containers or delivery systems are subject to the European REACH (Registration, Evaluation, Authorization and Restriction of CHemicals) directive. For import into the European Union, Timken can sell and provide only those lubricants and greases that are registered with ECHA (European CHemical Agency). For further information, please contact your Timken engineer.

STORAGE

Timken suggests the following storage guidelines for our finished products (bearings, components and assemblies, referred to as "products"):

- Unless directed otherwise by Timken, products should be kept in their original packaging until they are ready to be placed into service.
- Do not remove or alter any labels or stencil markings on the packaging.
- Products should be stored in such a way that the packaging is not pierced, crushed or otherwise damaged.
- After a product is removed from its packaging, it should be placed into service as soon as possible.
- When removing a product that is not individually packaged from a bulk pack container, the container should be resealed immediately after the product is removed.
- The storage area temperature should be maintained between 0° C and 40° C; temperature fluctuations should be minimized.
- The relative humidity should be maintained below 60 percent and the surfaces should be dry.
- The storage area should be kept free from airborne contaminants such as, but not limited to, dust, dirt, harmful vapors, etc.
- The storage area should be isolated from undue vibration.
- Extreme conditions of any kind should be avoided.

Due to the fact that Timken is not familiar with your particular storage conditions, we strongly suggest following these guidelines. However, you may be required by circumstances or applicable government requirements to adhere to stricter storage requirements.

Most bearing components typically ship protected with a corrosion-preventive compound that is not a lubricant. These components may be used in oil-lubricated applications without removal of the corrosion-preventive compound. When using some specialized grease lubrications, we advise you to remove the corrosion-preventive compound before packing the bearing components with suitable grease.

Be careful in selecting lubrication, however, since different lubricants are often incompatible.

When you receive a bearing shipment, do not remove products from their packaging until they are ready for mounting so they do not become corroded or contaminated.

Store bearings and bearing housings in an appropriate atmosphere so they remain protected for the intended period.

WARNINGS

WARNING

Failure to observe the following warnings could create a risk of death or serious injury.

Proper maintenance and handling practices are critical. Always follow installation instructions and maintain proper lubrication.

Overheated bearings can ignite explosive atmospheres. Special care must be taken to properly select, install, maintain and lubricate mounted bearings that are used in or near atmospheres that may contain explosive levels of combustible gases or accumulations of dust such as grain, coal, or other combustible materials. Consult your equipment designer or supplier for installation and maintenance instructions.

If hammer and bar are used for installation or removal of a part, use a mild steel bar (e.g., 1010 or 1020 grade). Mild steel bars are less likely to cause release of high speed fragments from the hammer or bar or the part being installed or removed.

CAUTION

Failure to follow these cautions may result in property damage.

Do not use damaged mounted bearings.

Warnings for this product line are in this catalog and posted on www.timken.com/en-us/products/warnings

NOTE

Do not use excessive force when mounting or dismounting the unit.

Follow all tolerance, fit, and torque recommendations.

Always follow the Original Equipment Manufacturer's installation and maintenance guidelines.

Ensure proper alignment.

Never weld mounted bearings.

Do not heat components with an open flame.

Do not operate at bearing temperatures above 250˚ F (121˚ C).

When converting a solid-block mounted bearing from fixed to expansion, it is imperative that the unit that is going to be converted is correctly oriented. Since the insert in a steel mounted flange bearing is held against either a shoulder or snap ring opposite the housing retaining nut, a flange bearing that has been converted to expansion can only float in the direction of the retaining nut. Based on this, the retaining nut must be on the side of the housing opposite the fixed bearing.

When converting a solid-block mounted bearing from expansion to fixed on a mounted bearing, the locking-collar set screws must be released to allow the insert to move both in the housing and on the shaft.

DISCLAIMER

This catalog is provided solely to give you analysis tools and data to assist you in your product selection. Product performance is affected by many factors beyond the control of Timken. Therefore, the suitability and feasibility of all product selection must be validated by you.

Timken products are sold subject to our terms and conditions of sale, which include its limited warranty and remedy, which terms may be found at https://www.timken.com/legal-notices/termsandconditionsofsale/

Please consult with your Timken engineer for more information and assistance.

Every reasonable effort has been made to ensure the accuracy of the information in this writing, but no liability is accepted for errors, omissions or for any other reason.

COMPLIANCE

To view the complete engineering catalog, please visit www.timken.com. To order the catalog, please contact your Timken sales engineer and request a copy of the Timken Engineering Manual (order number 10424).

The Timken Company products shown in this catalog may be directly, or indirectly subject to a number of regulatory standards and directives originating from authorities in the USA, European Union, and around the world, including: REACH (EC 1907/2006, RoHS (2011/65/EU), ATEX (94/9/EC), 'CE' MARKING (93/68/EEC), CONFLICT MINERALS (Section 1502 of the Dodd-Frank Wall Street Reform and Consumer Protection Act).

For any questions or concerns regarding whether Timken products comply with these, or other regulatory standards or directives, please contact your Timken engineer or customer services representative.

Updates are made periodically to this catalog. Visit www.timken.com for the most recent version of the Timken Solid-Block Mounted Spherical Roller Bearing Catalog.



ENGINEERING

The following topics are covered within this section:

Nomenclature 10
Locking Styles 15
Seal and Cover Options 16
Bearing Loads 34
Normal Speed Ratings for Seals 57
Internal Radial Clearances 63
Shafting 65
Lubrication 67
Misalignment 67
Installation Guides 68

To view more Timken catalogs, go to www.timken.com/catalogs for interactive versions, or to download the Timken catalog app for your smartphone or mobile device scan the QR code or go to timkencatalogs.com.

NOMENCLATURE
ORDERING SOLID-BLOCK MOUNTED BEARINGS

Every solid-block mounted bearing is made of cast steel for greater strength (compared to cast iron). All bearings feature a double-row, spherical roller bearing design for a high load-carrying capacity, misalignment tolerance and reduced friction.

Starting with these standard design advantages, you can choose from a wide range of sizes, locking styles, seal options and housing styles suited precisely for your application.

There are many ways to determine the correct solid-block mounted bearing part number for ordering purposes:

- Once you determine the best locking style, housing and seal options for your application, you can easily find the correct part number in the tables included in the following sections.
- If you are ordering a replacement for an existing mounted bearing, locate the part number for that mounted bearing on the housing tag.
- If none of the above apply, or if you have additional questions or concerns about ordering the correct mounted bearing, contact your Timken engineer.



SOLID-BLOCK MOUNTED SPHERICAL ROLLER BEARING

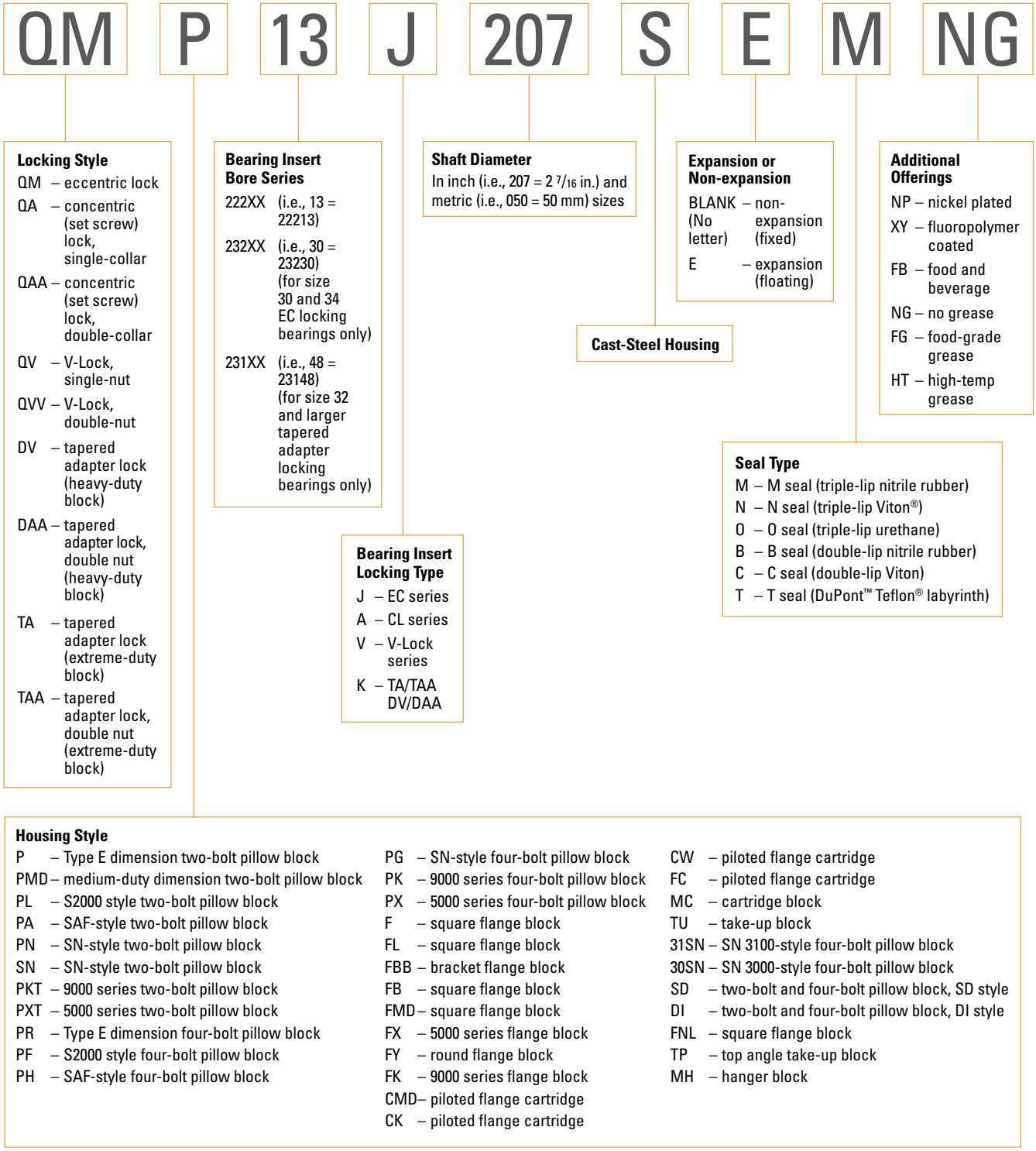

STEEL COVER

OPEN-END STEEL COVER

CJ 18 T 085 S

Locking Style
CA – concentric lock
CJ – eccentric lock
CV – V-Lock
CK – tapered adapter lock

Seal Type
T seal only

Steel Cover

Shaft Size
In inch (i.e., 207 = 2 7/16 in.) and metric (i.e., 050 = 50 mm) sizes

Bearing Insert Bore Series
222XX (i.e., 13 = 22213)
232XX (i.e., 30 = 23230) (for size 30 and 34 EC locking bearings only)
231XX (i.e., 48 = 23148) (for size 32 and larger tapered adapter locking bearings only)

CLOSED-END STEEL COVER

CS 18 STEEL

Closed-End Cover

Steel Cover

Bearing Insert Bore Series
222XX (i.e., 13 = 22213)
232XX (i.e., 30 = 23230) (for size 30 and 34 EC locking bearings only)
231XX (i.e., 48 = 23148) (for size 32 and larger tapered adapter locking bearings only)

URETHANE COVER

OPEN-END COVER WITH DR SEAL

CJ DR 207

Locking Style
CJ – eccentric lock and concentric lock
CK – tapered adapter lock

Triple-Lip Secondary Seal

Shaft Size
In inch (i.e., 207 = 2 7/16 in.) and metric (i.e., 050 = 50 mm) sizes

V-LOCK OPEN-END COVER WITH DR SEAL

CV DR 14 207

Locking Style
CV – V-Lock

Triple-Lip Secondary Seal

Bearing Insert Series
222XX (i.e., 14 = 22214)
232XX (for size 30 and 34 bearing only)

Shaft Size
In inch (i.e., 207 = 2 7/16 in.) and metric (i.e., 050 = 50 mm) sizes

OPEN-END COVER WITH VR SEAL

CJ VR 13

Locking Style
CJ – eccentric lock and concentric lock
CK – tapered adapter lock
CV – V-lock

VR ring

Bearing Insert Series
222XX (i.e., 13 = 22213)
232XX (for size 30 and 34 bearing only)

CLOSED-END COVER

CS 13

Closed-End Cover

Bearing Insert Series
222XX (i.e., 13 = 22213)
232XX (for size 30 and 34 bearing only)

BACKING PLATE

CL AND EC SERIES BEARINGS

UFP

Square Flange Urethane Backing Plate with VR Seal

207

Shaft Size
In inch (i.e., 207 = 2 7/16 in.) and metric (i.e., 050 = 50 mm) sizes

HSY

Piloted Flange Urethane Backing Plate with DR Seal

207

Shaft Size
In inch (i.e., 207 = 2 7/16 in.) and metric (i.e., 050 = 50 mm) sizes

HIGH-PERFORMANCE STEEL BACKING PLATE

CL and EC series bearings

BP

Backing Plate

10

Bearing Insert Series
222XX (i.e., 10 = 22210)

T

Seal Type
T – T seal (DuPont Teflon labyrinth)

115

Shaft Size
In inch (i.e., 207 = 2 7/16 in.) and metric (i.e., 050 = 50 mm) sizes

S

Steel

W

Withdrawal Holes

BLANK (No letter)	– No withdrawal holes
W	– Withdrawal holes

COMPARISON CHART

TABLE 1. COMPARISON CHART

		Primary Seals						Secondary Seals and Covers					
								Open-End Cover			Closed-End Cover	HSY Flange Cartridge Backing Plate	UFP Backing Plate
	Housing Type	M	N	O	B	C	T	DR	VR	T		DR	
V-Lock (Timken Exclusive Double Taper Lock)	Pillow Block	•	•	•	•	•	•	•	•	•	•		
	Flange Block	•	•	•	•	•	•	•	•	•	•		
	Piloted Flange Cartridge	•	•	•	•	•	•	•	•	•	•		
	Take-up Block	•	•	•	•	•	•	•	•	•	•		
	Cartridge Block	•	•	•	•	•	•	•	•	•	•		
CL Series (Set Screw Lock)	Pillow Block	•	•	•	•	•	•	•	•	•	•		
	Flange Block	•	•	•	•	•	•	•	•	•	•		•
	Piloted Flange Cartridge	•	•	•	•	•	•	•	•	•	•	•	
	Take-up Block	•	•	•	•	•	•	•	•	•	•		
	Cartridge Block	•	•	•	•	•	•	•	•	•	•		
	Hanger Block	•	•	•	•	•	•	•	•	•	•		
EC Series (Eccentric Lock)	Pillow Block	•	•	•	•	•	•	•	•	•	•		
	Flange Block	•	•	•	•	•	•	•	•	•	•		•
	Piloted Flange Cartridge	•	•	•	•	•	•	•	•	•	•	•	
	Take-up Block	•	•	•	•	•	•	•	•	•	•		
	Cartridge Block	•	•	•	•	•	•	•	•	•	•		
	Hanger Block	•	•	•	•	•	•	•	•	•	•		
TA/TAA Series (Tapered Adapter Lock)	Pillow Block	•	•	•	•	•	•	•	•	•	•		
	Flange Block	•	•	•	•	•	•	•	•	•	•		
	Piloted Flange Cartridge	•	•	•	•	•	•	•	•	•	•		
	Cartridge Block	•	•	•	•	•	•	•	•	•	•		
DV/DAA Series (Tapered Adapter Lock)	Pillow Block	•	•	•	•	•	•	•	•	•	•		
	Flange Block	•	•	•	•	•	•	•	•	•	•		
	Piloted Flange Cartridge	•	•	•	•	•	•	•	•	•	•		

LOCKING STYLES

V-LOCK (DOUBLE-TAPERED LOCK) U.S. PAT. NO. 7344313

The V-Lock locking mechanism is excellent in high-speed applications and designed to maximize shaft-holding power and minimize the time needed for installation and removal as compared to conventional locking mechanisms. With no need for feeler gages during installation, the V-Lock locking mechanism offers superior holding power and is designed to eliminate overtightening. Mechanical withdrawal is a feature of double-nut units.

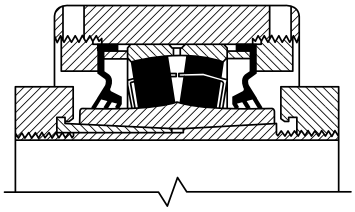

Fig. 8. V-Lock double tapered lock.

CONCENTRIC LOCK (SET SCREW) – CL SERIES

Two set screws positioned at 60 degrees provide aggressive holding power. When configured with a double-collared insert, the bearing provides double the holding power compared to our standard single-collared insert.

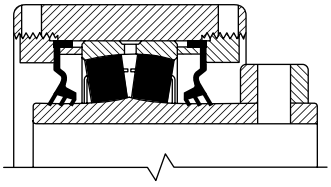

Fig. 9. Single set screw lock.

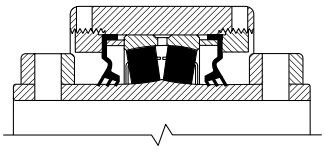

Fig. 10. Double set screw lock.

ECCENTRIC LOCK – EC SERIES

A reduced eccentric offset results in more mechanical advantage. This series provides a secure lock that should not release from a properly prepared shaft even in reversing applications.

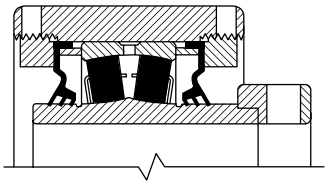

Fig. 11. Eccentric lock.

TAPERED ADAPTER LOCK – TA/TAA DV/DAA SERIES

Excellent in high-load applications, this design uses a longer 2300-series adapter for increased shaft contact. This design offers the best shaft concentricity and highest capacity all while having the ability to accommodate undersized shafting.

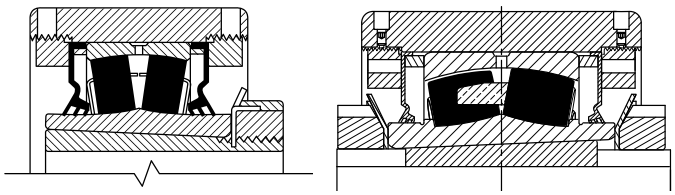

Fig. 12. Tapered adapter lock.

A simple design that in turn simplifies installation and removal of mounted bearings. The standard tapered adapter sleeve has been extended to accommodate a second nut on the back end. This nut is factory set for nominal shaft sizes and can be adjusted in the field to accommodate actual (under/over) shaft size if necessary.

HOUSING COATINGS

POWDER COATING – STANDARD

All of our steel housings come powder coated from the factory. Powder coating gives a hard finish that is tough and durable.

NICKEL PLATING – OPTIONAL

By nickel plating any of our housings, we are able to offer superior resistance to wear and corrosion.

FLUOROPOLYMER COATING – OPTIONAL

We have the ability to coat your housing with either industrial or food grade fluoropolymer for your washdown and/or food contact applications.

SEAL AND COVER OPTIONS

PRIMARY SEALS

Primary seals are installed between the inner ring of the bearing and the housing. They are held securely in place by the external housing nut. Primary seals can be contacting or non-contacting, purging or non-purging and are available in several material compounds for a variety of applications.

TRIPLE-LIP SEALS – CONTACTING, SELF-PURGING, LOW TO MODERATE SPEEDS[1]

Timken offers three kinds of medium-contact triple-lip seals. Choose from seals made of nitrile synthetic rubber (acrylonitrile butadiene), Viton™ fluoroelastomer or urethane.

- **M Seal** – This seal, made of nitrile rubber, offers superior sealing in moist and dirty applications. It is chemical- and corrosion-resistant and provides excellent lubrication retention. It also allows excess grease to purge from the bearing cavity.
- **N Seal** – Made of Viton, this seal provides excellent chemical resistance and can operate at higher temperatures than nitrile rubber.
- **O Seal** – This seal, made of high-strength urethane for superior abrasion resistance.

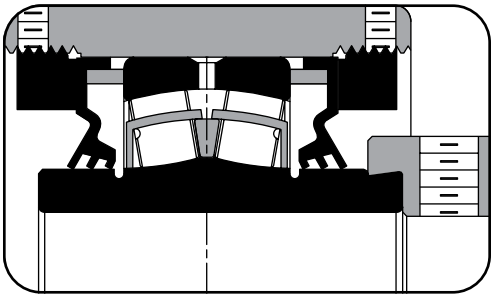

Fig. 13. Triple-lip seals.

LABYRINTH SEALS – NON-CONTACTING, NON-PURGING, ALL SPEEDS[2]

Instead of trying to form a seal with a single strong barrier, a labyrinth seal uses a winding passageway to accomplish the same reduction in flow. Not only is seal friction reduced, but so is seal wear.

- **T Seal** – This seal consists of a DuPont™ Teflon® ring pressed onto the inner ring of the bearing that floats between two pieces of formed steel to accommodate misalignment. When using this seal, the housing comes with a vent fitting. Developed for higher-speed applications involving dirty conditions or moisture-affected areas, it is able to operate at higher temperatures and is impervious to most chemicals.

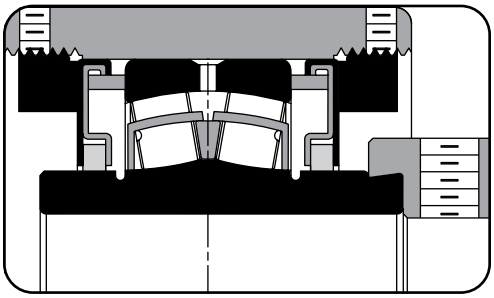

Fig. 14. T seal.

DOUBLE-LIP SEALS – CONTACTING, NON-PURGING, LOW SPEEDS[1][2]

These seals incorporate a double-lip seal, a garter spring for maximum contact, and a heavy-duty steel shield that protects the seal from large pieces of debris that could damage the seal itself.

- **B Seal** – Made of nitrile rubber, this seal offers superior protection in applications with oil lubrication and is designed for extreme moisture, fine dust or extremely dirty applications. When using this seal, the housing comes with a vent fitting.
- **C Seal** – Made of Viton, this seal provides excellent chemical and abrasion resistance and can operate at higher temperatures than nitrile rubber. When using this seal, the housing comes with a vent fitting.

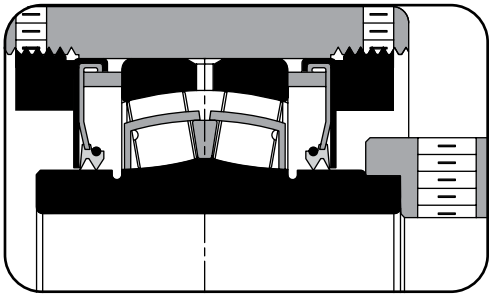

Fig. 15. Double-lip seals.

[1]Temperature limit -40° C to 121° C (-40° F to 250° F) continuous, 149° C (300° F) intermittent. Constant seal-lip pressure on the inner ring results in higher operating temperatures of the complete unit. (See pages 57 – 59).
[2]Relief valve is standard.

SECONDARY SEALS

In many circumstances, bearings become damaged in housings due to premature primary seal wear. This is usually the result of harsh operating environments or lubrication issues. Timken offers secondary sealing options that provide an additional barrier to protect the primary seal. These economical secondary seals and covers are easily outfitted on virtually all solid-block mounted bearings.

STEEL COVERS

Labyrinth Seals – Non-Contacting, Non-Purging, All Speeds

A labyrinth seal uses a winding passageway to accomplish a reduction in flow instead of trying to form a seal with a single strong barrier. Seal friction and wear is reduced.

- **T Seal** – This seal, which is used in the open-end steel covers, consists of a DuPont Teflon ring pressed onto the shaft that floats between two pieces of formed steel to accommodate misalignment. Developed for higher-speed applications involving dirty conditions or moisture-affected areas, it is able to operate at higher temperatures and is impervious to most chemicals, while avoiding shaft damage.

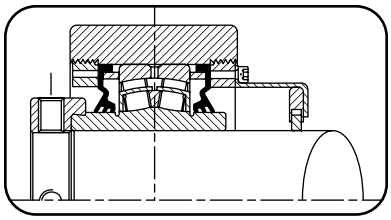

Fig. 16. Open-end steel cover with T seal.

URETHANE COVERS

DR Triple-Lip Secondary Seal – Low Speeds

The DR seal is the standard triple-lip seal adapted for use on the open-end covers and piloted flange cartridge backing plates (HSY). This seal can move within the cover or backing plate opening to accommodate misalignment while maintaining full contact to the shaft for positive sealing.

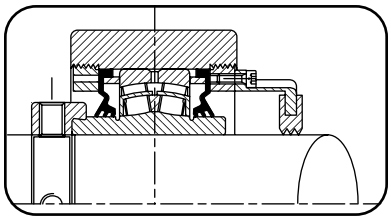

Fig. 17. Open-end urethane cover with DR seal.

VR Ring Secondary Seal – High Speeds

The VR seal, made of nitrile rubber, rides on the shaft and seals against the open-end covers and flange block backing plates (UFP).

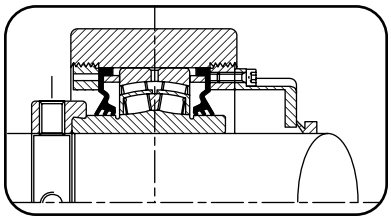

Fig. 18. Open-end urethane cover with VR seal.

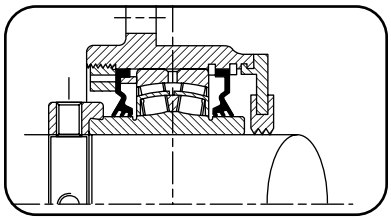

Fig. 19. HSY backing plate with DR seal.

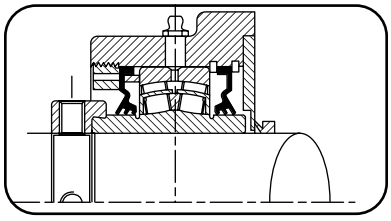

Fig. 20. UFP backing plate with VR seal.

STEEL AUXILIARY COVERS

Steel auxiliary covers bolt directly onto solid-block mounted spherical roller bearings. A DuPont Teflon labyrinth seal on the open-ended covers guards against shaft damage and gives protection at high running speeds. Made from steel to withstand the toughest applications.

These covers are available in both open-ended and closed-ended designs for standard and custom configurations of Timken solid-block mounted spherical roller bearings.

Closed-End Covers (CS)

These bolt-on covers are designed to be virtually indestructible and extremely convenient. They are made from structural steel or urethane and are easy to install. The cover completely seals the bearing, preventing contamination from reaching the primary seal. Every cover is outfitted with a grease fitting to fill the cover cavity for an added barrier against contamination.



Fig. 21. Closed-end covers.

Open-End Covers (CJ/CK/CV)

These bolt-on covers are made from structural steel or urethane for repeated and continuous use. The covers are used with either a DuPont Teflon (T seal), triple-lip seal (DR) or a V-ring seal (VR) to help prevent contamination from reaching the primary seal. Every cover is outfitted with a grease fitting to fill the cover cavity for an added barrier against contamination.



Fig. 22. Open-end covers.

PILOTED FLANGE CARTRIDGE BACKING PLATES (HSY)

The HSY backing plate is designed to work in conjunction with the piloted flange cartridge mounted bearings. Made of structural urethane, these plates are fitted to the back side of the pilot for extra protection. The HSY plate comes supplied with a triple-lip seal (DR) or a contamination collar (optional) to form an additional barrier against contamination for the most demanding applications.



Fig. 23. Piloted flange cartridge backing plates.

FLANGE BLOCK BACKING PLATES (UFP)

These backing plates are made from structural urethane and are uniquely designed to work with our flange block mounted bearings. Made to fit flush against the back of the housing, these plates create a labyrinth over the inner ring for additional contamination protection. The UFP plate, when used with an optional V-ring seal (VR), provides an extra barrier against extreme contamination.



Fig. 24. Flange block backing plates.

HIGH-PERFORMANCE STEEL BACKING PLATE (BP)

These backing plates are made from mild steel and are uniquely designed to fit with our square flange block mounted bearings. These plates use dual Teflon seals to make 360° contact on the shaft to eliminate contamination into the flange side of the housing. The plate is placed on the shaft prior to mounting the flange block and mounts flush with the back of the housing secured by the mounting bolts.



Fig. 25. High-performance steel backing plates.

STEEL COVER DIMENSIONS

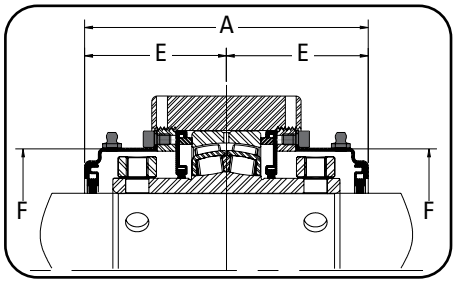

Fig. 26. Double open-end cover.[1]

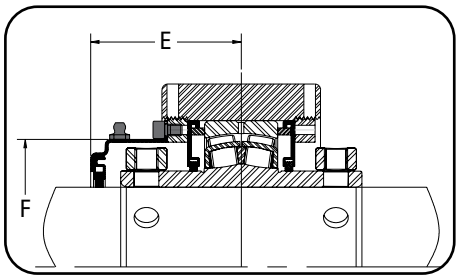

Fig. 27. Single open-end cover.

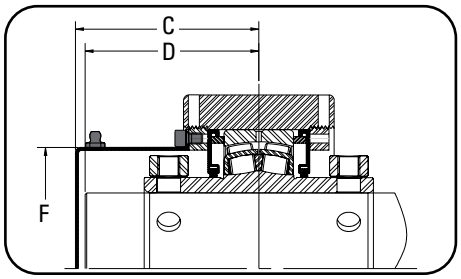

Fig. 28. Single closed-end cover.

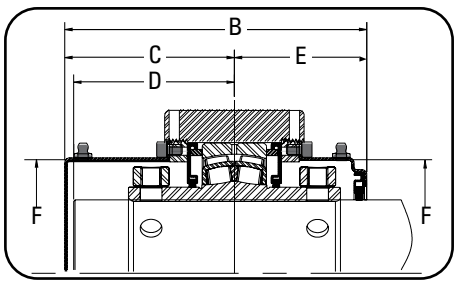

Fig. 29. Single closed-end cover and single open-end cover.[1]

[1]Double covers available only on pillow block and take-up style bearings.

TABLE 2. V-LOCK SERIES – STRAIGHT BORE EQUIVALENTS

Cover Part No.	Shaft Dia.	Bearing No.	Steel Cover Dimensions					
			A	B	C	D	E	F
	mm in.		**mm** in.	**mm** in.	**mm** in.	**mm** in.	**mm** in.	**mm** in.
CS11STEEL	CLOSED	22211	**128.5** 5.06	**143.3** 5.64	**79.2** 3.12	**75.2** 2.96	**64.3** 2.53	**89.7** 3.53
CV11T115S	1 15/16 in.							
CV11T050S	**50 mm**							
CV11T200S	2 in.							
CS12STEEL	CLOSED	22212	**129.0** 5.08	**141.5** 5.57	**77.0** 3.03	**72.9** 2.87	**64.5** 2.54	**98.6** 3.88
CV12T055S	**55 mm**							
CV12T203S	2 3/16 in.							
CV12T204S	2 1/4 in.							
CS14STEEL	CLOSED	22214	**135.4** 5.33	**159.3** 6.27	**91.4** 3.60	**87.4** 3.44	**67.8** 2.67	**103.6** 4.08
CV14T060S	**60 mm**							
CV14T207S	2 7/16 in.							
CV14T208S	2 1/2 in.							
CV14T065S	**65 mm**							
CS16STEEL	CLOSED	22216	**150.1** 5.91	**167.6** 6.60	**92.5** 3.64	**88.4** 3.48	**75.2** 2.96	**116.1** 4.57
CV16T211S	2 11/16 in.							
CV16T212S	2 3/4 in.							
CV16T070S	**70 mm**							
CV16T215S	2 15/16 in.							
CV16T075S	**75 mm**							
CV16T300S	3 in.							
CS19STEEL	CLOSED	22219	**167.9** 6.61	**191.0** 7.52	**106.9** 4.21	**102.9** 4.05	**84.1** 3.31	**139.4** 5.49
CV19T080S	**80 mm**							
CV19T303S	3 3/16 in.							
CV19T304S	3 1/4 in.							
CV19T085S	**85 mm**							
CV19T307S	3 7/16 in.							
CV19T308S	3 1/2 in.							
CV19T090S	**90 mm**							
CS22STEEL	CLOSED	22222	**217.7** 8.57	**241.8** 9.52	**133.1** 5.24	**129.0** 5.08	**109.0** 4.29	**180.1** 7.09
CV22T311S	3 11/16 in.							
CV22T312S	3 3/4 in.							
CV22T100S	**100 mm**							
CV22T315S	3 15/16 in.							
CV22T400S	4 in.							
CS26STEEL	CLOSED	22226	**219.7** 8.65	**242.8** 9.56	**133.1** 5.24	**129.0** 5.08	**110.0** 4.33	**209.3** 8.24
CV26T110S	**110 mm**							
CV26T407S	4 7/16 in.							
CV26T408S	4 1/2 in.							
CV26T115S	**115 mm**							
CS28STEEL	CLOSED	22228	**223.5** 8.80	**246.9** 9.72	**135.1** 5.32	**131.1** 5.16	**111.8** 4.40	**209.3** 8.24
CV28T125S	**125 mm**							
CV28T415S	4 15/16 in.							
CV28T500S	5 in.							
CV28T130S	**130 mm**							

TABLE 3. V-LOCK SERIES – TAPERED BORE EQUIVALENTS

Cover Part No.	Shaft Dia.	Bearing No.	Steel Cover Dimensions					
			A	B	C	D	E	F
	mm in.		mm in.	mm in.	mm in.	mm in.	mm in.	mm in.
CS11STEEL	CLOSED	22211	124.2 4.89	139.2 5.48	77.0 3.03	72.9 2.87	62.2 2.45	89.7 3.53
CV11T115S	1 15⁄16 in.							
CV11T050S	50 mm							
CV11T200S	2 in.							
CS13STEEL	CLOSED	22213	130.3 5.13	154.2 6.07	88.9 3.50	84.8 3.34	65.3 2.57	103.6 4.08
CV13T055S	55 mm							
CV13T203S	2 3⁄16 in.							
CV13T204S	2 1⁄4 in.							
CS15STEEL	CLOSED	22215	142.7 5.62	160.3 6.31	88.9 3.50	84.8 3.34	71.4 2.81	116.1 4.57
CV15T060S	60 mm							
CV15T207S	2 7⁄16 in.							
CV15T208S	2 1⁄2 in.							
CV15T065S	65 mm							
CS17STEEL	CLOSED	22217	133.9 5.27	156.0 6.14	88.9 3.50	84.8 3.34	67.1 2.64	132.1 5.2
CV17T211S	2 11⁄16 in.							
CV17T212S	2 3⁄4 in.							
CV17T070S	70 mm							
CV17T215S	2 15⁄16 in.							
CV17T075S	75 mm							
CV17T300S	3 in.							
CS20STEEL	CLOSED	22220	170.4 6.71	193.0 7.60	108.0 4.25	103.9 4.09	85.3 3.36	160.3 6.31
CV20T080S	80 mm							
CV20T303S	3 3⁄16 in.							
CV20T304S	3 1⁄4 in.							
CV20T085S	85 mm							
CV20T307S	3 7⁄16 in.							
CV20T308S	3 1⁄2 in.							
CV20T090S	90 mm							
CS22STEEL	CLOSED	22222	208.5 8.21	232.9 9.17	128.5 5.06	124.5 4.90	104.4 4.11	180.1 7.09
CV22T311S	3 11⁄16 in.							
CV22T312S	3 3⁄4 in.							
CV22T100S	100 mm							
CV22T315S	3 15⁄16 in.							
CV22T400S	4 in.							
CS24STEEL	CLOSED	22224	213.6 8.41	237.7 9.36	131.1 5.16	127.0 5.00	106.7 4.20	180.1 7.09
CV24T110S	110 mm							
CS26STEEL	CLOSED	22226	210.6 8.29	233.9 9.21	128.5 5.06	124.5 4.90	105.4 4.15	209.3 8.24
CV26T110S	110 mm							
CV26T407S	4 7⁄16 in.							
CV26T408S	4 1⁄2 in.							
CV26T115S	115 mm							
CS28STEEL	CLOSED	22228	214.6 8.45	238.0 9.37	130.6 5.14	126.5 4.98	107.2 4.22	209.3 8.24
CV28T125S	125 mm							
CV28T415S	4 15⁄16 in.							
CV28T500S	5 in.							
CV28T130S	130 mm							

TABLE 4. CL SERIES – SINGLE AND DOUBLE SET SCREW LOCKS

Cover Part No.	Shaft Dia.	Bearing No.	Steel Cover Dimensions					
			A	B	C	D	E	F
	mm in.		mm in.	mm in.	mm in.	mm in.	mm in.	mm in.
CS08STEEL	CLOSED	22208	115.6 4.55	127.8 5.03	69.9 2.75	65.8 2.59	57.9 2.28	69.6 2.74
CA08T035S	35 mm							
CA08T107S	1 7⁄16 in.							
CA08T108S	1 1⁄2 in.							
CS09STEEL	CLOSED	22209	121.7 4.79	130.8 5.15	69.9 2.75	65.8 2.59	61.0 2.40	74.7 2.94
CA09T040S	40 mm							
CA09T111S	1 11⁄16 in.							
CA09T112S	1 3⁄4 in.							
CA09T045S	45 mm							
CS10STEEL	CLOSED	22210	122.7 4.83	132.8 5.23	73.2 2.88	69.1 2.72	61.5 2.42	79.8 3.14
CA10T115S	1 15⁄16 in.							
CA10T050S	50 mm							
CA10T200S	2 in.							
CS11STEEL	CLOSED	22211	128.5 5.06	143.3 5.64	79.2 3.12	75.2 2.96	64.3 2.53	89.7 3.53
CA11T055S	55 mm							
CA11T203S	2 3⁄16 in.							
CA11T204S	2 1⁄4 in.							
CS13STEEL	CLOSED	22213	135.4 5.33	159.3 6.27	91.4 3.60	87.4 3.44	67.8 2.67	103.6 4.08
CA13T060S	60 mm							
CA13T207S	2 7⁄16 in.							
CA13T208S	2 1⁄2 in.							
CA13T065S	65 mm							
CS15STEEL	CLOSED	22215	148.1 5.83	165.6 6.52	91.4 3.60	87.4 3.44	74.2 2.92	116.1 4.57
CA15T211S	2 11⁄16 in.							
CA15T212S	2 3⁄4 in.							
CA15T070S	70 mm							
CA15T215S	2 15⁄16 in.							
CA15T075S	75 mm							
CA15T300S	3 in.							
CS18STEEL	CLOSED	22218	164.8 6.49	188.0 7.40	105.7 4.16	101.6 4.00	82.6 3.25	139.4 5.49
CA18T080S	80 mm							
CA18T303S	3 3⁄16 in.							
CA18T304S	3 1⁄4 in.							
CA18T085S	85 mm							
CA18T307S	3 7⁄16 in.							
CA18T308S	3 1⁄2 in.							
CA18T090S	90 mm							
CS20STEEL	CLOSED	22220	179.6 7.07	202.2 7.96	112.5 4.43	108.5 4.27	89.9 3.54	160.3 6.31
CA20T311S	3 11⁄16 in.							
CA20T312S	3 3⁄4 in.							
CA20T100S	100 mm							
CA20T315S	3 15⁄16 in.							
CA20T400S	4 in.							
CS22STEEL	CLOSED	22222	217.7 8.57	241.8 9.52	133.1 5.24	129.0 5.08	109.0 4.29	180.1 7.09
CA22T110S	110 mm							
CA22T407S	4 7⁄16 in.							
CA22T408S	4 1⁄2 in.							
CA22T115S	115 mm							
CS26STEEL	CLOSED	22226	219.7 8.65	242.8 9.56	133.1 5.24	129.0 5.08	110.0 4.33	209.3 8.24
CA26T125S	125 mm							
CA26T415S	4 15⁄16 in.							
CA26T500S	5 in.							
CA26T130S	130 mm							

STEEL COVER DIMENSIONS – *continued*

TABLE 5. EC SERIES – ECCENTRIC LOCK

Cover Part No.	Shaft Dia.	Bearing No.	Steel Cover Dimensions					
			A	B	C	D	E	F
	mm in.		**mm** in.	**mm** in.	**mm** in.	**mm** in.	**mm** in.	**mm** in.
CS08STEEL	CLOSED	22208	**115.6** 4.55	**127.8** 5.03	**69.9** 2.75	**65.8** 2.59	**57.9** 2.28	**69.6** 2.74
CJ08T035S	**35 mm**							
CJ08T107S	1 7⁄16 in.							
CJ08T108S	1 ½ in.							
CS09STEEL	Closed	22209	**121.7** 4.79	**130.8** 5.15	**69.9** 2.75	**65.8** 2.59	**61.0** 2.40	**74.7** 2.94
CJ09T040S	**40 mm**							
CJ09T111S	1 11⁄16 in.							
CJ09T112S	1 ¾ in.							
CJ09T045S	**45 mm**							
CS10STEEL	CLOSED	22210	**122.7** 4.83	**132.8** 5.23	**73.2** 2.88	**69.1** 2.72	**61.5** 2.42	**79.8** 3.14
CJ10T115S	1 15⁄16 in.							
CJ10T050S	**50 mm**							
CJ10T200S	2 in.							
CS11STEEL	CLOSED	22211	**128.5** **5.06**	**143.3** 5.64	**79.2** 3.12	**75.2** 2.96	**64.3** 2.53	**89.7** 3.53
CJ11T055S	**55 mm**							
CJ11T203S	2 3⁄16 in.							
CJ11T204S	2 ¼ in.							
CS13STEEL	CLOSED	22213	**135.4** 5.33	**159.3** 6.27	**91.4** 3.60	**87.4** 3.44	**67.8** 2.67	**103.6** 4.08
CJ13T060S	**60 mm**							
CJ13T207S	2 7⁄16 in.							
CJ13T208S	2 ½ in.							
CJ13T065S	**65 mm**							
CS15STEEL	CLOSED	22215	**148.1** 5.83	**165.6** 6.52	**91.4** 3.60	**87.4** 3.44	**74.2** 2.92	**116.1** 4.57
CJ15T211S	2 11⁄16 in.							
CJ15T212S	2 ¾ in.							
CJ15T070S	**70 mm**							
CJ15T215S	2 15⁄16 in.							
CJ15T075S	**75 mm**							
CJ15T300S	3 in.							
CS18STEEL	CLOSED	22218	**164.8** 6.49	**188.0** 7.40	**105.7** 4.16	**101.6** 4.00	**82.6** 3.25	**139.4** 5.49
CJ18T080S	**80 mm**							
CJ18T303S	3 3⁄16 in.							
CJ18T304S	3 ¼ in.							
CJ18T085S	**85 mm**							
CJ18T307S	3 7⁄16 in.							
CJ18T308S	3 ½ in.							
CJ18T090S	**90 mm**							
CS20STEEL	CLOSED	22220	**179.6** 7.07	**202.2** 7.96	**112.5** 4.43	**108.5** 4.27	**89.9** 3.54	**160.3** 6.31
CJ20T311S	3 11⁄16 in.							
CJ20T312S	3 ¾ in.							
CJ20T100S	**100 mm**							
CJ20T315S	3 15⁄16 in.							
CJ20T400S	4 in.							
CS22STEEL	CLOSED	22222	**217.7** 8.57	**241.8** 9.52	**133.1** 5.24	**129.0** 5.08	**109.0** 4.29	**180.1** 7.09
CJ22T110S	**110 mm**							
CJ22T407S	4 7⁄16 in.							
CJ22T408S	4 ½ in.							
CJ22T115S	**115 mm**							
CS26STEEL	CLOSED	22226	**219.7** 8.65	**242.8** 9.56	**133.1** 5.24	**129.0** 5.08	**110.0** 4.33	**209.3** 8.24
CJ26T125S	**125 mm**							
CJ26T415S	4 15⁄16 in.							
CJ26T500S	5 in.							
CJ26T130S	**130 mm**							
CS30STEEL	CLOSED	23230	**270.3** 10.64	**283.2** 11.15	**148.1** 5.83	**144.0** 5.67	**135.1** 5.32	**239.5** 9.43
CJ30T507S	5 7⁄16 in.							
CJ30T508S	5 ½ in.							
CJ30T140S	**140 mm**							
CJ30T515S	5 15⁄16 in.							
CJ30T600S	6 in.							
CJ30T150S	**150 mm**							
CS34STEEL	CLOSED	23234	**300.5** 11.83	**305.3** 12.02	**155.2** 6.11	**151.1** 5.95	**150.1** 5.91	**279.4** 11.00
CJ34T607S	6 7⁄16 in.							
CJ34T608S	6 ½ in.							
CJ34T170S	**170 mm**							
CJ34T615S	6 15⁄16 in.							
CJ34T700S	7 in.							
CJ34T180S	**180 mm**							

TABLE 6. TA/DV SERIES – TAPERED ADAPTER LOCK

Cover Part No.	Shaft Dia.	Bearing No.	Steel Cover Dimensions					
			A	B	C	D	E	F
	mm in.		**mm** in.	**mm** in.	**mm** in.	**mm** in.	**mm** in.	**mm** in.
CS09STEEL	CLOSED	22209	**118.4** 4.66	**127.5** 5.02	**68.3** 2.69	**64.3** 2.53	**59.2** 2.33	**74.7** 2.94
CK09T107S	1 7⁄16 in.							
CK09T108S	1 ½ in.							
CK09T040S	**40 mm**							
CS10STEEL	CLOSED	22210	**118.4** 4.66	**130.0** 5.12	**70.9** 2.79	**66.8** 2.63	**59.2** 2.33	**79.8** 3.14
CK10T111S	1 11⁄16 in.							
CK10T112S	1 ¾ in.							
CK10T045S	**45 mm**							
CS11STEEL	CLOSED	22211	**124.2** 4.89	**139.2** 5.48	**77.0** 3.03	**72.9** 2.87	**62.2** 2.45	**89.7** 3.53
CK11T115S	1 15⁄16 in.							
CK11T050S	**50 mm**							
CK11T200S	2 in.							
CS12STEEL	CLOSED	22212	**123.7** 4.87	**136.4** 5.37	**74.4** 2.93	**70.4** 2.77	**62.0** 2.44	**98.6** 3.88
CK12T055S	**55 mm**							
CS13STEEL	CLOSED	22213	**130.3** 5.13	**154.2** 6.07	**88.9** 3.50	**84.8** 3.34	**65.3** 2.57	**103.6** 4.08
CK13T203S	2 3⁄16 in.							
CK13T204S	2 ¼ in.							
CK13T060S	**60 mm**							
CS15STEEL	CLOSED	22215	**142.7** 5.62	**160.3** 6.31	**88.9** 3.50	**84.8** 3.34	**71.4** 2.81	**116.1** 4.57
CK15T207S	2 7⁄16 in.							
CK15T208S	2 ½ in.							
CK15T065S	**65 mm**							
CS16STEEL	CLOSED	22216	**144.8** 5.70	**162.3** 6.39	**89.9** 3.54	**85.9** 3.38	**72.4** 2.85	**116.1** 4.57
CK16T211S	2 11⁄16 in.							
CK16T212S	2 ¾ in.							
CK16T070S	**70 mm**							
CS17STEEL	CLOSED	22217	**133.9** 5.27	**156.0** 6.14	**88.9** 3.50	**84.8** 3.34	**67.1** 2.64	**132.1** 5.20
CK17T215S	2 15⁄16 in.							
CK17T075S	**75 mm**							
CK17T300S	3 in.							
CS18STEEL	CLOSED	22218	**159.5** 6.28	**182.9** 7.20	**102.9** 4.05	**98.8** 3.89	**79.8** 3.14	**139.4** 5.49
CK18T080S	**80 mm**							
CK18T303S	3 3⁄16 in.							
CK18T304S	3 ¼ in.							
CS19STEEL	CLOSED	22219	**162.6** 6.40	**185.7** 7.31	**104.4** 4.11	**100.3** 3.95	**81.3** 3.20	**139.4** 5.49
CK19T085S	**85 mm**							

Cover Part No.	Shaft Dia.	Bearing No.	Steel Cover Dimensions					
			A	B	C	D	E	F
	mm in.		**mm** in.	**mm** in.	**mm** in.	**mm** in.	**mm** in.	**mm** in.
CS20STEEL	CLOSED	22220	**170.4** 6.71	**193.0** 7.60	**108.0** 4.25	**103.9** 4.09	**85.3** 3.36	**160.3** 6.31
CK20T307S	3 7⁄16 in.							
CK20T308S	3 ½ in.							
CK20T090S	**90 mm**							
CS22STEEL	CLOSED	22222	**208.5** 8.21	**232.9** 9.17	**128.5** 5.06	**124.5** 4.90	**104.4** 4.11	**180.1** 7.09
CK22T315S	3 15⁄16 in.							
CK22T400S	4 in.							
CK22T100S	**100 mm**							
CS24STEEL	CLOSED	22224	**213.6** 8.41	**237.7** 9.36	**131.1** 5.16	**127.0** 5.00	**106.7** 4.20	**180.1** 7.09
CK24T403S	4 3⁄16 in.							
CK24T404S	4 ¼ in.							
CK24T110S	**110 mm**							
CS26STEEL	CLOSED	22226	**210.6** 8.29	**233.9** 9.21	**128.5** 5.06	**124.5** 4.90	**105.4** 4.15	**209.3** 8.24
CK26T407S	4 7⁄16 in.							
CK26T408S	4 ½ in.							
CK26T115S	**115 mm**							
CS28STEEL	CLOSED	22228	**214.6** 8.45	**238.0** 9.37	**130.6** 5.14	**126.5** 4.98	**107.2** 4.22	**209.3** 8.24
CK28T415S	4 15⁄16 in.							
CK28T500S	5 in.							
CK28T125S	**125 mm**							

STEEL COVER DIMENSIONS – *continued*

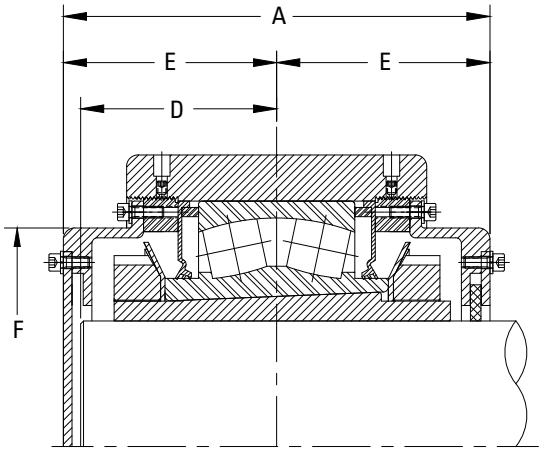

TABLE 7. TAA/DAA SERIES – TAPERED ADAPTER LOCK

Cover Part No.	Shaft Dia.	Bearing No.	Steel Cover Dimensions			
			A	D	E	F
	mm in.		**mm** in.	**mm** in.	**mm** in.	**mm** in.
CS32STEEL	CLOSED	23132	**235.1** 9.26	**108.2** 4.26	**117.6** 4.63	**240.5** 9.47
CK32T135S	**135 mm**					
CK32T506S	5 3⁄8 in.					
CK32T507S	5 7⁄16 in.					
CK32T508S	5 1⁄2 in.					
CK32T140S	**140 mm**					
CS34LSTEEL	CLOSED	23134	**236.6** 9.32	**108.7** 4.28	**118.3** 4.66	**243.4** 9.58
CK34T513S	5 13⁄16 in.					
CK34T514S	5 7⁄8 in.					
CK34T150S	**150 mm**					
CK34T515S	5 15⁄16 in.					
CK34T600S	6 in.					
CS36STEEL	CLOSED	23136	**237.1** 9.34	**107.0** 4.21	**118.6** 4.67	**255.9** 10.08
CK36T160S	**160 mm**					
CK36T605S	6 5⁄16 in.					
CK36T606S	6 3⁄8 in.					
CK36T607S	6 7⁄16 in.					
CK36T608S	6 1⁄2 in.					
CS38STEEL	CLOSED	23138	**255.4** 10.06	**118.1** 4.65	**127.7** 5.03	**272.3** 10.72
CK38T170S	**170 mm**					
CK38T613S	6 13⁄16 in.					
CK38T614S	6 7⁄8 in.					
CK38T615S	6 15⁄16 in.					
CK38T700S	7 in.					
CS40STEEL	CLOSED	23140	**258.8** 10.19	**119.4** 4.70	**129.4** 5.09	**287.4** 11.31
CK40T180S	**180 mm**					
CK40T702S	7 1⁄8 in.					
CK40T703S	7 3⁄16 in.					
CK40T704S	7 1⁄4 in.					
CS44STEEL	CLOSED	23144	**297.7** 11.72	**136.1** 5.36	**148.9** 5.86	**314.0** 12.36
CK44T713S	7 13⁄16 in.					
CK44T200S	**200 mm**					
CK44T714S	7 7⁄8 in.					
CK44T715S	7 15⁄16 in.					
CK44T800S	8 in.					
CS48STEEL	CLOSED	23148	**300.0** 11.81	**136.7** 5.38	**150.0** 5.91	**346.4** 13.64
CK48T807S	8 7⁄16 in.					
CK48T808S	8 1⁄2 in.					
CK48T220S	**220 mm**					
CK48T815S	8 15⁄16 in.					
CK48T900S	9 in.					
CS52STEEL	CLOSED	23152	**330.0** 12.99	**151.0** 5.95	**165.0** 6.50	**381.0** 15.00
CK52T907S	9 7⁄16 in.					
CK52T240S	**240 mm**					
CK52T908S	9 1⁄2 in.					
CS56STEEL	CLOSED	23156	**365.2** 14.38	**167.0** 6.58	**182.6** 7.19	**388.4** 15.29
CK56T915S	9 15⁄16 in.					
CK56T1000S	10 in.					
CK56T260S	**260 mm**					
CK56T1007S	10 7⁄16 in.					
CK56T1008S	10 1⁄2 in.					
CS60STEEL	CLOSED	23160	**377.5** 14.86	**170.6** 6.71	**188.8** 7.43	**432.8** 17.04
CK60T1015S	10 15⁄16 in.					
CK60T1100S	11 in.					
CK60T280S	**280 mm**					
CS64STEEL	CLOSED	23164	**390.5** 15.37	**176.7** 6.96	**195.2** 7.69	**450.8** 17.75
CK64T1107S	11 7⁄16 in.					
CK64T1108S	11 1⁄2 in.					
CK64T300S	**300 mm**					
CK64T1115S	11 15⁄16 in.					
CK64T1200S	12 in.					

Continued on next page.

TABLE 7. TAA/DAA SERIES – TAPERED ADAPTER LOCK (CONTINUED)

Cover Part No.	Shaft Dia.	Bearing No.	Steel Cover Dimensions			
			A	D	E	F
	mm in.		**mm** in.	**mm** in.	**mm** in.	**mm** in.
CS68STEEL	CLOSED	23168	**412.6** 16.24	**185.2** 7.29	**206.3** 8.12	**482.1** 18.98
CK68T1207S	12 7⁄16 in.					
CK68T1208S	12 ½ in.					
CK68T320S	**320 mm**					
CS72STEEL	CLOSED	23172	**435.2** 17.13	**196.8** 7.75	**217.6** 8.57	**521.6** 20.54
CK72T1215S	12 15⁄16 in.					
CK72T1300S	13 in.					
CK72T340S	**340 mm**					
CK72T1307S	13 7⁄16 in.					
CK72T1308S	13 ½ in.					
CS76STEEL	CLOSED	23176	**458.9** 18.07	**204.2** 8.04	**229.5** 9.03	**554.3** 21.82
CK76T1315S	13 15⁄16 in.					
CK76T1400S	14 in.					
CK76T360S	**360 mm**					
CS80STEEL	CLOSED	23180	**482.1** 18.98	**215.6** 8.49	**241.1** 9.49	**582.6** 22.94
CK80T1415S	14 15⁄16 in.					
CK80T380S	**380 mm**					
CK80T1500S	15 in.					

URETHANE

CLOSED-END COVER DIMENSIONS

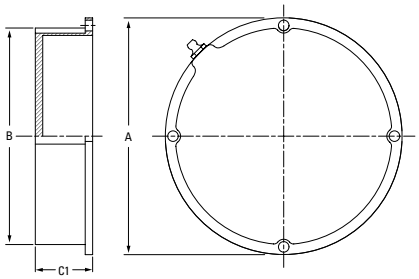

TABLE 8. CLOSED-END COVER DIMENSIONS

Cover Part No.[1]	A	B	C1[2]
	mm in.	**mm** in.	**mm** in.
CS08	**81.5** 3.21	**76.7** 3.02	**31.6** 1.25
CS09	**86.6** 3.41	**81.6** 3.21	**31.6** 1.25
CS10	**91.9** 3.62	**86.6** 3.41	**31.6** 1.25
CS11	**101.9** 4.01	**96.6** 3.81	**31.6** 1.25
CS12V	**110.5** 4.35	**105.6** 4.16	**31.6** 1.25
CS13/CS14V	**119.4** 4.70	**110.5** 4.35	**27.3** 1.08
CS15/CS16V	**130.0** 5.12	**122.9** 4.84	**33.0** 1.30
CS17	**149.9** 5.90	**139.0** 5.47	**31.1** 1.22
CS18/CS19V	**160.3** 6.31	**146.5** 5.77	**38.8** 1.53
CS20	**179.8** 7.08	**167.2** 6.58	**44.5** 1.75
CS22	**200.4** 7.89	**187.2** 7.37	**52.7** 2.07
CS24	**200.4** 7.89	**187.2** 7.37	**52.7** 2.07
CS26/CS28V	**230.1** 9.06	**216.2** 8.51	**56.9** 2.24
CS30	**270.5** 10.65	**254.0** 10.00	**56.9** 2.24
CS30L	**248.4** 9.78	**221.2** 8.71	**31.2** 1.23
CS32	**270.0** 10.63	**240.5** 9.47	**33.5** 1.32
CS34	**309.9** 12.20	**295.2** 11.62	**73.3** 2.89
CS34L	**280.0** 11.02	**243.4** 9.58	**31.5** 1.24
CS36	**295.4** 11.63	**255.9** 10.08	**31.5** 1.24
CS38	**316.1** 12.45	**272.3** 10.72	**32.5** 1.28
CS40	**335.2** 13.20	**272.3** 10.72	**32.5** 1.28
CS44	**367.0** 14.45	**314.0** 12.36	**41.4** 1.63

[1]Cover part number, CSXX, is determined by the bearing insert series of unit on which cover will be installed. See nomenclature guide on page 12 to determine bearing insert series.
[2]Extended covers available upon request.

URETHANE – *continued*

OPEN-END COVERS WITH DR SEALS

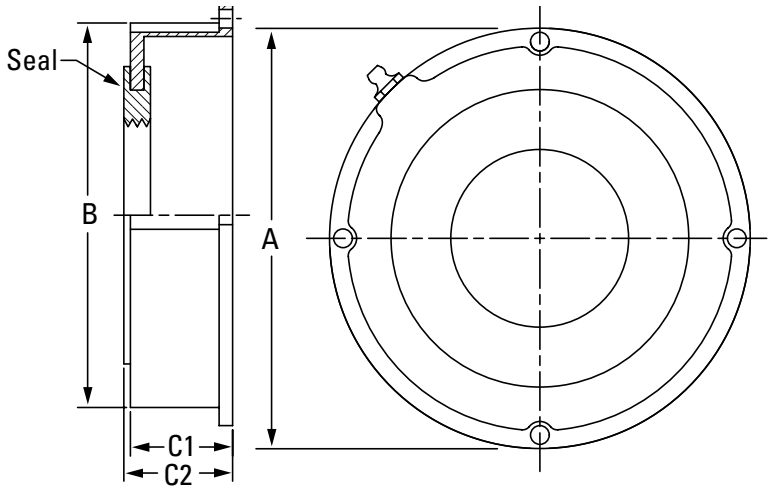

TABLE 9. V-LOCK SERIES – STRAIGHT BORE EQUIVALENT – OPEN-END COVER WITH DR SEAL – (QV[V]...P, PL, SN, PF, PR, C, CW, F, FL, FY, FX, TU)

Cover Part No.	Shaft Dia.	A	B	C1	C2
	mm in.	**mm** in.	**mm** in.	**mm** in.	**mm** in.
CVDR11-115	1 15⁄16 in.	**101.9** 4.01	**96.6** 3.81	**31.6** 1.25	**34.2** 1.35
CVDR11-200	2 in.				
CVDR11-050MM	**50 mm**				
CVDR12-203	2 3⁄16 in.	**110.5** 4.35	**105.6** 4.16	**31.6** 1.25	**34.2** 1.35
CVDR12-204	2 1⁄4 in.				
CVDR12-055MM	**55 mm**				
CVDR14-060MM	**60 mm**	**119.4** 4.70	**110.5** 4.35	**27.3** 1.08	**29.8** 1.18
CVDR14-207	2 7⁄16 in.				
CVDR14-208	2 1⁄2 in.				
CVDR14-065MM	**65 mm**				
CVDR16-211	2 11⁄16 in.	**130.0** 5.12	**122.9** 4.84	**33.0** 1.30	**35.5** 1.40
CVDR16-212	2 3⁄4 in.				
CVDR16-070MM	**70 mm**				
CVDR16-215	2 15⁄16 in.				
CVDR16-300	3 in.				
CVDR16-075MM	**75 mm**				
CVDR19-303	3 3⁄16 in.	**160.3** 6.31	**146.5** 5.77	**38.8** 1.53	**41.4** 1.63
CVDR19-304	3 1⁄4 in.				
CVDR19-080MM	**80 mm**				
CVDR19-085MM	**85 mm**				
CVDR19-307	3 7⁄16 in.				
CVDR19-308	3 1⁄2 in.				
CVDR19-090MM	**90 mm**				
CVDR22-311	3 11⁄16 in.	**200.4** 7.89	**187.2** 7.37	**52.7** 2.07	**55.2** 2.17
CVDR22-312	3 3⁄4 in.				
CVDR22-100MM	**100 mm**				
CVDR22-315	3 15⁄16 in.				
CVDR22-400	4 in.				
CVDR26-110MM	**110 mm**	**230.1** 9.06	**216.2** 8.51	**56.9** 2.24	**59.4** 2.34
CVDR26-407	4 7⁄16 in.				
CVDR26-408	4 1⁄2 in.				
CVDR26-115MM	**115 mm**				
CVDR28-125MM	**125 mm**	**230.1** 9.06	**216.2** 8.51	**56.9** 2.24	**59.4** 2.34
CVDR28-415	4 15⁄16 in.				
CVDR28-500	5 in.				
CVDR28-130MM	**130 mm**				

TABLE 10. V-LOCK SERIES – TAPERED ADAPTER EQUIVALENT – OPEN-END COVER WITH DR SEAL – (QV[V]...PA, PN, PKT, PK, PH, PG, FC, FB, MC)

Cover Part No.	Shaft Dia.	A	B	C1	C2
	mm in.	**mm** in.	**mm** in.	**mm** in.	**mm** in.
CVDR11-115	1 15⁄16 in.	**101.9** 4.01	**96.6** 3.81	**31.6** 1.25	**34.2** 1.35
CVDR11-200	2 in.				
CVDR11-050MM	**50 mm**				
CVDR13-203	2 3⁄16 in.	**119.4** 4.70	**110.5** 4.35	**27.3** 1.08	**29.8** 1.18
CVDR13-204	2 1⁄4 in.				
CVDR13-055MM	**55 mm**				
CVDR15-060MM	**60 mm**	**130.0** 5.12	**122.9** 4.84	**33.0** 1.30	**35.5** 1.40
CVDR15-207	2 7⁄16 in.				
CVDR15-208	2 1⁄2 in.				
CVDR15-065MM	**65 mm**				
CVDR17-211	2 11⁄16 in.	**149.9** 5.90	**139.0** 5.47	**31.1** 1.22	**33.6** 1.32
CVDR17-212	2 3⁄4 in.				
CVDR17-070MM	**70 mm**				
CVDR17-215	2 15⁄16 in.				
CVDR17-300	3 in.				
CVDR16-075MM	**75 mm**				
CVDR20-303	3 3⁄16 in.	**179.8** 7.08	**167.2** 6.58	**44.5** 1.75	**47.0** 1.85
CVDR20-304	3 1⁄4 in.				
CVDR20-080MM	**80 mm**				
CVDR20-085MM	**85 mm**				
CVDR20-307	3 7⁄16 in.				
CVDR19-308	3 1⁄2 in.				
CVDR19-090MM	**90 mm**				
CVDR22-311	3 11⁄16 in.	**200.4** 7.89	**187.2** 7.37	**52.7** 2.07	**55.2** 2.17
CVDR22-312	3 3⁄4 in.				
CVDR22-100MM	**100 mm**				
CVDR22-315	3 15⁄16 in.				
CVDR22-400	4 in.				
CVDR26-110MM	**110 mm**	**230.1** 9.06	**216.2** 8.51	**56.9** 2.24	**59.4** 2.34
CVDR26-407	4 7⁄16 in.				
CVDR26-408	4 1⁄2 in.				
CVDR26-115MM	**115 mm**				
CVDR28-125MM	**125 mm**	**230.1** 9.06	**216.2** 8.51	**56.9** 2.24	**59.4** 2.34
CVDR28-415	4 15⁄16 in.				
CVDR28-500	5 in.				
CVDR28-130MM	**130 mm**				

OPEN-END COVERS WITH DR SEALS

TABLE 11. CL AND EC SERIES – OPEN-END COVER WITH DR SEAL

Cover Part No.	Shaft Dia.	A	B	C1	C2
	mm in.	**mm** in.	**mm** in.	**mm** in.	**mm** in.
CJDR035MM	**35 mm**	**97.0** 3.82	**76.7** 3.02	**31.8** 1.25	**34.3** 1.35
CJDR107	1 7⁄16 in.				
CJDR108	1 ½ in.				
CJDR040MM	**40 mm**	**101.9** 4.01	**81.6** 3.21	**31.8** 1.25	**34.3** 1.35
CJDR111	1 11⁄16 in.				
CJDR112	1 ¾ in.				
CJDR045MM	**45 mm**	**106.9** 4.21	**86.6** 3.41	**31.8** 1.25	**34.3** 1.35
CJDR115	1 15⁄16 in.				
CJDR200	2 in.				
CJDR050MM	**50 mm**	**117.1** 4.61	**96.8** 3.81	**31.8** 1.25	**34.3** 1.35
CJDR203	2 3⁄16 in.				
CJDR204	2 ¼ in.				
CJDR055MM	**55 mm**	**132.1** 5.20	**110.49** 4.35	**27.4** 1.08	**30.0** 1.18
CJDR060MM	**60 mm**				
CJDR207	2 7⁄16 in.				
CJDR208	2 ½ in.				
CJDR065MM	**65 mm**	**142** 5.59	**122.9** 4.84	**33.0** 1.30	**35.6** 1.40
CJDR211	2 11⁄16 in.				
CJDR070MM	**70 mm**				
CJDR212	2 ¾ in.				
CJDR215	2 15⁄16 in.				
CJDR300	3 in.				
CJDR075MM	**75 mm**	**168.1** 6.62	**149.1** 5.87	**38.9** 1.53	**41.4** 1.63
CJDR303	3 3⁄16 in.				
CJDR304	3 ¼ in.				
CJDR080MM	**80 mm**				
CJDR085MM	**85 mm**				
CJDR307	3 7⁄16 in.				
CJDR308	3 ½ in.				
CJDR090MM	**90 mm**				
CJDR315	3 15⁄16 in.	**192** 7.56	**174.8** 6.88	**44.5** 1.75	**47.0** 1.85
CJDR400	4 in.				
CJDR100MM	**100 mm**				
CJDR110MM	**110 mm**	**212.1** 8.35	**194.8** 7.67	**52.6** 2.07	**55.1** 2.17
CJDR407	4 7⁄16 in.				
CJDR408	4 ½ in.				
CJDR115MM	**115 mm**				
CJDR125MM	**125 mm**	**241.3** 9.50	**223.8** 8.81	**56.9** 2.24	**59.4** 2.34
CJDR415	4 15⁄16 in.				
CJDR500	5 in.				
CJDR130MM	**130 mm**				
CJDR507	5 7⁄16 in.	**271.6** 10.69	**254.0** 10.00	**56.9** 2.24	**59.4** 2.34
CJDR508	5 ½ in.				
CJDR140MM	**140 mm**				
CJDR515	5 15⁄16 in.				
CJDR600	6 in.				
CJDR150MM	**150 mm**				
CJDR607	6 7⁄16 in.	**304.8** 12.00	**287.3** 11.31	**56.9** 2.24	**59.4** 2.34
CJDR608	6 ½ in.				
CJDR170MM	**170 mm**				
CJDR615	6 15⁄16 in.				
CJDR700	7 in.				
CJDR180MM	**180 mm**				

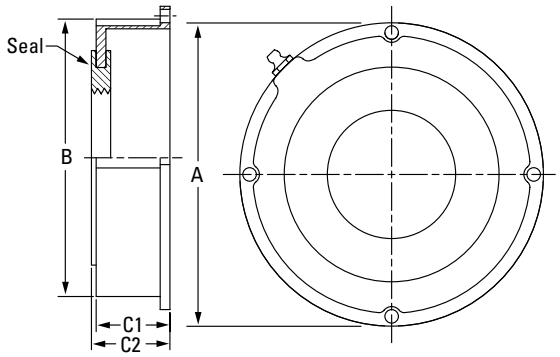

TABLE 12. TA/DV SERIES – OPEN-END COVER WITH DR SEAL

Cover Part No.	Shaft Dia.	A	B	C1	C2
	mm in.	**mm** in.	**mm** in.	**mm** in.	**mm** in.
CKDR107	1 7⁄16 in.	**86.6** 3.41	**81.5** 3.21	**31.8** 1.25	**34.3** 1.35
CKDR108	1 ½ in.				
CKDR040MM	**40 mm**				
CKDR111	1 11⁄16 in.	**92.7** 3.65	**86.6** 3.41	**31.8** 1.25	**34.3** 1.35
CKDR112	1 ¾ in.				
CKDR045MM	**45mm**				
CKDR115	1 15⁄16 in.	**101.9** 4.01	**96.8** 3.81	**31.8** 1.25	**34.3** 1.35
CKDR200	2 in.				
CKDR050MM	**50 mm**				
CKDR055MM	**55 mm**	**111.8** 4.40	**105.7** 4.16	**31.8** 1.25	**34.3** 1.35
CKDR203	2 3⁄16 in.	**119.4** 4.70	**116.1** 4.57	**27.4** 1.08	**30.0** 1.18
CKDR204	2 ¼ in.				
CKDR060MM	**60 mm**				
CKDR207	2 7⁄16 in.	**130.0** 5.12	**122.9** 4.84	**33.0** 1.30	**35.6** 1.40
CKDR208	2 ½ in.				
CKDR065MM	**65 mm**				
CKDR211	2 11⁄16 in.	**130.0** 5.12	**122.9** 4.84	**33.0** 1.30	**35.6** 1.40
CKDR212	2 ¾ in.				
CKDR070MM	**70 mm**				
CKDR215	2 15⁄16 in.	**149.9** 5.90	**141.5** 5.57	**31.0** 1.22	**33.5** 1.32
CKDR300	3 in.				
CKDR075MM	**75 mm**				
CKDR080MM	**80 mm**	**160.3** 6.31	**149.1** 5.87	**38.9** 1.53	**41.4** 1.63
CKDR303	3 3⁄16 in.				
CKDR304	3 ¼ in.				
CKDR085MM	**85 mm**	**160.3** 6.31	**149.1** 5.87	**38.9** 1.53	**41.4** 1.63
CKDR307	3 7⁄16 in.	**179.8** **7.08**	**174.8** 6.88	**44.5** 1.75	**47.0** 1.85
CKDR308	3 ½ in.				
CKDR090MM	**90 mm**				
CKDR315	3 15⁄16 in.	**200.4** 7.89	**194.8** 7.67	**52.6** 2.07	**55.1** 2.17
CKDR400	4 in.				
CKDR100MM	**100 mm**				
CKDR403	4 3⁄16 in.	**200.4** 7.89	**194.8** 7.67	**52.6** 2.07	**55.1** 2.17
CKDR404	4 ¼ in.				
CKDR110MM	**110 mm**				
CKDR407	4 7⁄16 in.	**230.1** 9.06	**223.8** 8.81	**56.9** 2.24	**59.4** 2.34
CKDR408	4 ½ in.				
CKDR115MM	**115 mm**				
CKDR415	4 15⁄16 in.	**230.1** 9.06	**223.8** 8.81	**56.9** 2.24	**59.4** 2.34
CKDR500	5 in.				
CKDR125MM	**125 mm**				

Continued on next page.

URETHANE – *continued*

OPEN-END COVERS WITH DR SEALS

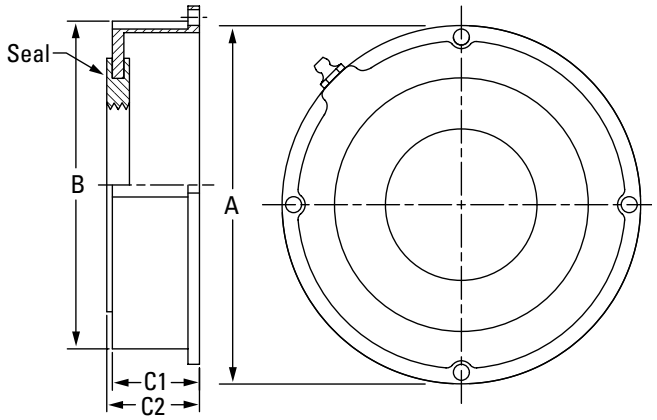

TABLE 12. TA/DV SERIES – OPEN-END COVER WITH DR SEAL (CONTINUED)

Cover Part No.	Shaft Dia.	A	B	C1	C2
	mm in.	**mm** in.	**mm** in.	**mm** in.	**mm** in.
CKDR503	5 3⁄16 in.	**248.4** 9.78	**221.2** 8.71	**31.2** 1.23	**33.8** 1.33
CKDR504	5 1⁄4 in.				
CKDR135MM	**135 mm**				
CKDR506	5 3⁄8 in.	**270.0** 10.63	**240.5** 9.47	**33.5** 1.32	**36.1** 1.42
CKDR507	5 7⁄16 in.				
CKDR508	5 1⁄2 in.				
CKDR140MM	**140 mm**				
CKDR513	5 13⁄16 in.	**280.0** 11.02	**243.4** 9.58	**31.5** 1.24	**34.0** 1.34
CKDR514	5 7⁄8 in.				
CKDR515	5 15⁄16 in.				
CKDR600	6 in.				
CKDR150MM	**150 mm**				
CKDR605	6 5⁄16 in.	**295.4** 11.63	**255.9** 10.08	**31.5** 1.24	**34.0** 1.34
CKDR606	6 3⁄8 in.				
CKDR607	6 7⁄16 in.				
CKDR608	6 1⁄2 in.				
CKDR160MM	**160 mm**				
CKDR613	6 13⁄16 in.	**316.1** 12.45	**272.3** 10.72	**32.5** 1.28	**35.1** 1.38
CKDR614	6 7⁄8 in.				
CKDR615	6 15⁄16 in.				
CKDR700	7 in.				
CKDR170MM	**170 mm**				
CKDR702	7 1⁄8 in.	**335.2** 13.20	**286.8** 11.29	**38.3** 1.51	**40.9** 1.61
CKDR703	7 3⁄16 in.				
CKDR704	7 1⁄4 in.				
CKDR180MM	**180 mm**				
CKDR713	7 13⁄16 in.	**367.0** 14.45	**314.0** 12.36	**41.4** 1.63	**43.9** 1.73
CKDR714	7 7⁄8 in.				
CKDR715	7 15⁄16 in.				
CKDR800	8 in.				
CKDR200MM	**200 mm**				

OPEN-END COVERS WITH VR SEALS

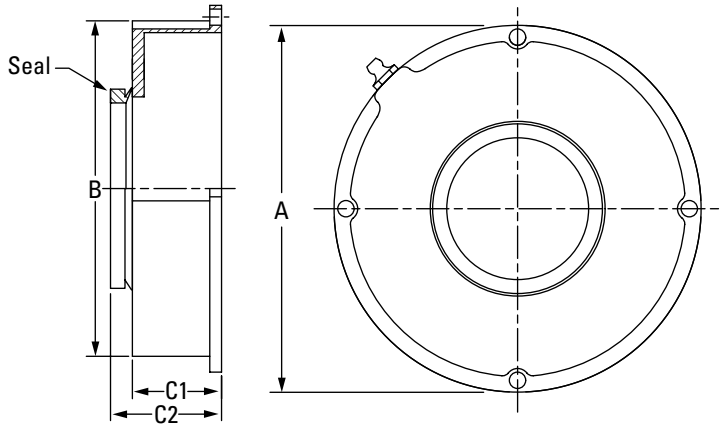

TABLE 13. V-LOCK SERIES – STRAIGHT BORE EQUIVALENT – OPEN-END COVER WITH VR SEAL – (QV[V])...P, PL, SN, PF, PR, PX, PXT, C, CW, F, FL, FY, FX, TU)

Cover Part No.[1]	Shaft Dia.	A	B	C1	C2
	mm in.	**mm** in.	**mm** in.	**mm** in.	**mm** in.
CVVR11	1 15⁄16 in.	**117.1** 4.61	**96.8** 3.81	**31.8** 1.25	**40.6** 1.60
	2 in.				
	50 mm				
CVVR12	2 3⁄16 in.	**126.0** 4.96	**105.7** 4.16	**31.8** 1.25	**40.6** 1.60
	2 1⁄4 in.				
	55 mm				
CVVR14	**60 mm**	**132.1** 5.20	**116.1** 4.57	**27.4** 1.08	**36.3** 1.43
	2 7⁄16 in.				
	2 1⁄2 in.				
	65 mm				
CVVR16	2 11⁄16 in.	**142.0** 5.59	**122.9** 4.84	**33.0** 1.30	**44.0** 1.73
	2 3⁄4 in.				
	70 mm				
	2 15⁄16 in.				
	3 in.				
	75 mm				
CVVR19	3 3⁄16 in.	**168.1** 6.62	**149.1** 5.87	**38.9** 1.53	**50.0** 1.96
	3 1⁄4 in.				
	80 mm				
	85 mm				
	3 7⁄16 in.				
	3 1⁄2 in.				
	90 mm				
CVVR22	3 11⁄16 in.	**212.1** 8.35	**194.8** 7.67	**52.6** 2.07	**63.5** 2.50
	3 3⁄4 in.				
	100 mm				
	3 15⁄16 in.				
	4 in.				
CVVR26	**110 mm**	**241.3** 9.50	**223.8** 8.81	**56.9** 2.24	**69.6** 2.74
	4 7⁄16 in.				
	4 1⁄2 in.				
	115 mm				
CVVR28	**125 mm**	**241.3** 9.50	**223.8** 8.81	**56.9** 2.24	**69.6** 2.74
	4 15⁄16 in.				
	5 in.				
	130 mm				

[1]Please refer to bore size when choosing cover for straight-bore V-Lock.

TABLE 14. V-LOCK SERIES – TAPERED ADAPTER EQUIVALENT – OPEN-END COVER WITH VR SEAL – (QV[V]...PA, PN, PKT, PK, PH, PG, FC, FB, MC)

Cover Part No.	Shaft Dia.	A	B	C1	C2
	mm in.	**mm** in.	**mm** in.	**mm** in.	**mm** in.
CKVR11	1 15⁄16 in.	**117.1** 4.61	**96.8** 3.81	**31.8** 1.25	**40.6** 1.60
	2 in.				
	50 mm				
CKVR13	2 3⁄16 in.	**132.1** 5.20	**116.1** 4.57	**27.4** 1.08	**36.3** 1.43
	2 1⁄4 in.				
	55 mm				
CKVR15	**60 mm**	**142.0** 5.59	**122.9** 4.84	**33.0** 1.30	**41.9** 1.65
	2 7⁄16 in.				
	2 1⁄2 in.				
	65 mm				
CKVR17	2 11⁄16 in.	**160.6** 6.32	**141.5** 5.57	**31.0** 1.22	**41.9** 1.65
	2 3⁄4 in.				
	70 mm				
	2 15⁄16 in.				
	3 in.				
	75 mm				
CKVR20	3 3⁄16 in.	**192.0** 7.56	**174.8** 6.88	**44.4** 1.75	**55.4** 2.18
	3 1⁄4 in.				
	80 mm				
	85 mm				
	3 7⁄16 in.				
	3 1⁄2 in.				
	90 mm				
CKVR22	3 11⁄16 in.	**212.1** 8.35	**194.8** 7.67	**52.6** 2.07	**63.5** 2.50
	3 3⁄4 in.				
	100 mm				
	3 15⁄16 in.				
	4 in.				
CKVR24	**110 mm**	**212.1** 8.35	**194.8** 7.67	**52.6** 2.07	**63.5** 2.5
CKVR26	**110 mm**	**241.3** 9.50	**223.8** 8.81	**56.9** 2.24	**69.6** 2.74
	4 7⁄16 in.				
	4 1⁄2 in.				
	115 mm				
CKVR28	**125 mm**	**241.3** 9.50	**223.8** 8.81	**56.9** 2.24	**69.6** 2.74
	4 15⁄16 in.				
	5 in.				
	130 mm				

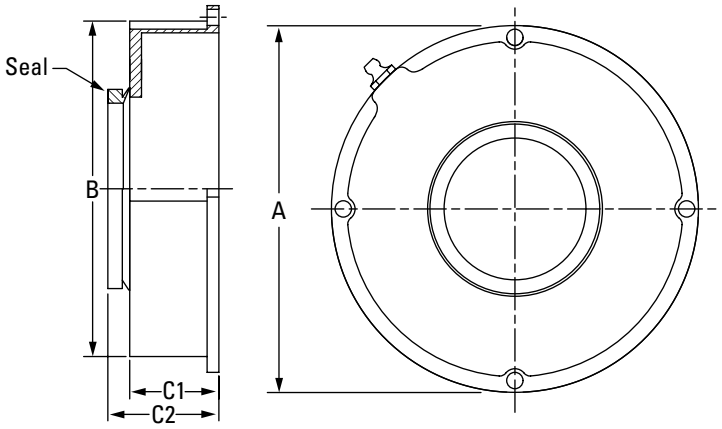

TABLE 15. CL AND EC SERIES – OPEN-END COVER WITH VR SEAL

Cover Part No.	Shaft Dia.	A	B	C1	C2
	mm in.	**mm** in.	**mm** in.	**mm** in.	**mm** in.
CJVR08	**35 mm**	**97.0** 3.82	**76.7** 3.02	**31.8** 1.25	**39.4** 1.55
	1 7⁄16 in.				
	1 ½ in.				
CJVR09	**40 mm**	**101.9** 4.01	**81.5** 3.21	**31.8** 1.25	**40.6** 1.60
	1 11⁄16 in.				
	1 ¾ in.				
	45 mm				
CJVR10	1 15⁄16 in.	**106.9** 4.21	**86.6** 3.41	**31.8** 1.25	**40.6** 1.60
	2 in.				
	50 mm				
CJVR11	2 3⁄16 in.	**117.1** 4.61	**96.8** 3.81	**31.8** 1.25	**40.6** 1.60
	2 ¼ in.				
	55 mm				
CJVR13	**60 mm**	**132.1** 5.20	**116.1** 4.57	**27.4** 1.08	**36.3** 1.43
	2 7⁄16 in.				
	2 ½ in.				
	65 mm				
CJVR15	2 11⁄16 in.	**142.0** 5.59	**122.9** 4.84	**33.0** 1.30	**44.0** 1.73
	70 mm				
	2 ¾ in.				
	2 15⁄16 in.				
	3 in.				
	75 mm				
CJVR18	3 3⁄16 in.	**168.1** 6.62	**149.1** 5.87	**38.9** 1.53	**49.8** 1.96
	3 ¼ in.				
	80 mm				
	85 mm				
	3 7⁄16 in.				
	3 ½ in.				
	90 mm				
CJVR20	3 15⁄16 in.	**192.0** 7.56	**174.8** 6.88	**44.5** 1.75	**55.4** 2.18
	4 in.				
	100 mm				
CJVR22	**110 mm**	**212.1** 8.35	**194.8** 7.67	**52.6** 2.07	**65.3** 2.57
	4 7⁄16 in.				
	4 ½ in.				
	115 mm				
CJVR26	**125 mm**	**241.3** 9.50	**223.8** 8.81	**56.9** 2.24	**69.6** 2.74
	4 15⁄16 in.				
	5 in.				

TABLE 16. TA/DV SERIES – OPEN-END COVER WITH VR SEAL

Cover Part No.	Shaft Dia.	A	B	C1	C2
	mm in.	**mm** in.	**mm** in.	**mm** in.	**mm** in.
CKVR09	1 7⁄16 in.	**101.9** 4.01	**81.5** 3.21	**31.8** 1.25	**39.4** 1.55
	1 ½ in.				
	40 mm				
CKVR10	1 11⁄16 in.	**106.9** 4.21	**86.6** 3.41	**31.8** 1.25	**40.6** 1.6
	1 ¾ in.				
	45 mm				
CKVR11	1 15⁄16 in.	**117.1** 4.61	**96.8** 3.81	**31.8** 1.25	**40.6** 1.60
	2 in.				
	50 mm				
CKVR12	**55 mm**	**126.0** 4.96	**105.7** 4.16	**31.8** 1.25	**40.6** 1.6
CKVR13	2 3⁄16 in.	**132.1** 5.20	**116.1** 4.57	**27.4** 1.08	**36.3** 1.43
	2 ¼ in.				
	60 mm				
CKVR15	2 7⁄16 in.	**142.0** 5.59	**122.9** 4.84	**33.0** 1.30	**41.9** 1.65
	2 ½ in.				
	65 mm				
CKVR16	2 11⁄16 in.	**142.0** 5.59	**122.9** 4.84	**33.0** 1.30	**41.9** 1.65
	2 ¾ in.				
	70 mm				
CKVR17	2 15⁄16 in.	**160.5** 6.32	**141.5** 5.57	**31.0** 1.22	**41.9** 1.65
	3 in.				
	75 mm				
CKVR18	**80 mm**	**168.1** 6.62	**149.1** 5.87	**38.9** 1.53	**49.8** 1.96
	3 3⁄16 in.				
	3 ¼ in.				
CKVR19	**85 mm**	**168.1** 6.62	**149.1** 5.87	**38.9** 1.53	**49.8** 1.96
CKVR20	3 7⁄16 in.	**192.0** 7.56	**174.8** 6.88	**44.5** 1.75	**55.4** 2.18
	3 ½ in.				
	90 mm				
CKVR22	3 15⁄16 in.	**212.1** 8.35	**194.8** 7.67	**52.6** 2.07	**63.5** 2.50
	4 in.				
	100 mm				
CKVR24	4 3⁄16 in.	**212.1** 8.35	**194.8** 7.67	**52.6** 2.07	**63.5** 2.50
	4 ¼ in.				
	110 mm				
CKVR26	4 7⁄16 in.	**241.3** 9.50	**223.8** 8.81	**56.9** 2.24	**69.6** 2.74
	4 ½ in.				
	115 mm				
CKVR28	4 15⁄16 in.	**241.3** 9.50	**223.8** 8.81	**56.9** 2.24	**69.6** 2.74
	5 in.				
	125 mm				

UFP AND HSY FLANGE BLOCK BACKING PLATE DIMENSIONS

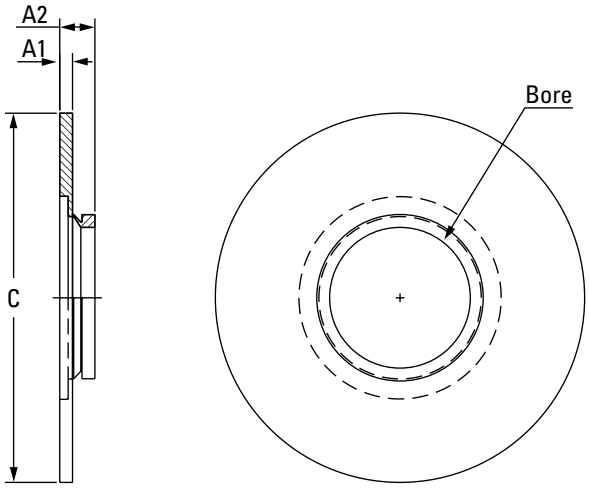

TABLE 17. UFP BACKING PLATE DIMENSIONS[1]

Cover Part No.	Shaft Dia.	A1	A2	C
	mm in.	**mm** in.	**mm** in.	**mm** in.
UFP035MM	**35 mm**	**5.1** 0.20	**12.7** 0.50	**95.3** 3.75
UFP107	1 7⁄16 in.			
UFP108	1 1⁄2 in.			
UFP111	1 11⁄16 in.	**5.1** 0.20	**14.0** 0.55	**105.9** 4.17
UFP040MM	**40 mm**			
UFP112	1 3⁄4 in.			
UFP045MM	**45 mm**			
UFP115	1 15⁄16 in.	**3.8** 0.15	**12.7** 0.50	**106.4** 4.19
UFP200	2 in.			
UFP050MM	**50 mm**			
UFP203	2 3⁄16 in.	**6.4** 0.25	**15.2** 0.60	**114.6** 4.51
UFP204	2 1⁄4 in.			
UFP055MM	**55 mm**			
UFP060MM	**60 mm**	**5.1** 0.20	**14.0** 0.55	**146.1** 5.75
UFP207	2 7⁄16 in.			
UFP208	2 1⁄2 in.			
UFP065MM	**65 mm**			
UFP211	2 11⁄16 in.	**5.1** 0.20	**16.0** 0.63	**146.6** 5.77
UFP070MM	**70 mm**			
UFP212	2 3⁄4 in.			
UPF215	2 15⁄16 in.			
UFP300	3 in.			
UFP075MM	**75 mm**			
UFP303	3 3⁄16 in.	**5.1** 0.20	**16.0** 0.63	**187.5** 7.38
UFP304	3 1⁄4 in.			
UFP080MM	**80 mm**			
UFP085MM	**85 mm**			
UFP307	3 7⁄16 in.			
UFP308	3 1⁄2 in.			
UFP090MM	**90 mm**			
UFP315	3 15⁄16 in.	**5.1** 0.20	**16.0** 0.63	**206.5** 8.13
UFP400	4 in.			
UFP100MM	**100 mm**			
UFP110MM	**110 mm**	**5.1** 0.20	**17.8** 0.70	**215.9** 8.50
UFP407	4 7⁄16 in.			
UFP408	4 1⁄2 in.			
UFP115MM	**115 mm**			
UFP125MM	**125 mm**	**5.1** 0.20	**17.8** 0.70	**299** 11.77
UFP415	4 15⁄16 in.			
UFP500	5 in.			
UFP130MM	**130 mm**			

[1]Actual backing plate may differ from drawing.

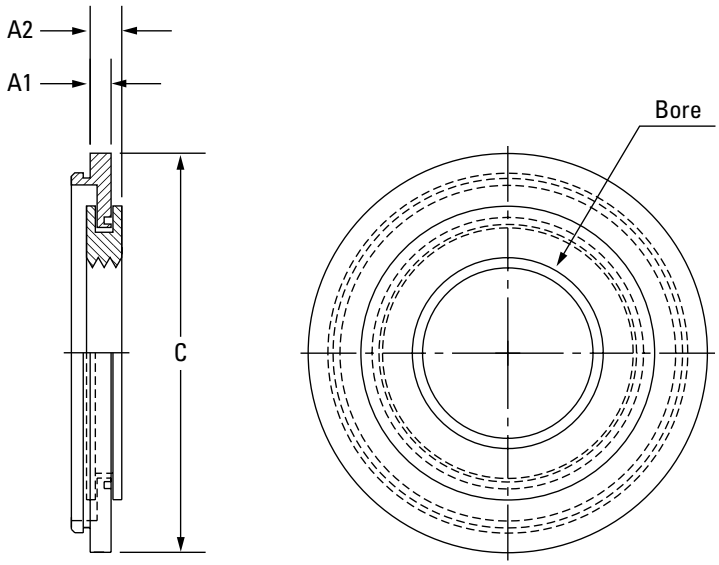

TABLE 18. HSY BACKING PLATE DIMENSIONS

Cover Part No.	Shaft Dia.	A1	A2	C
	mm in.	**mm** in.	**mm** in.	**mm** in.
HSY035MM	**35 mm**	**5.1** 0.20	**7.6** 0.30	**85.9** 3.38
HSY107	1 7⁄16 in.			
HSY108	1 ½ in.			
HSY111	1 11⁄16 in.	**8.9** 0.35	**11.4** 0.45	**101.6** 4.00
HSY040MM	**40 mm**			
HSY112	1 ¾ in.			
HSY045MM	**45 mm**			
HSY115	1 15⁄16 in.	**5.1** 0.20	**7.6** 0.30	**108.0** 4.25
HSY200	2 in.			
HSY050MM	**50 mm**			
HSY203	2 3⁄16 in.	**5.1** 0.20	**7.6** 0.30	**120.1** 4.73
HSY204	2 ¼ in.			
HSY055MM	**55 mm**			
HSY060MM	**60 mm**	**6.4** 0.25	**8.9** 0.35	**133.4** 5.25
HSY207	2 7⁄16 in.			
HSY208	2 ½ in.			
HSY065MM	**65 mm**			
HSY211	2 11⁄16 in.	**6.4** 0.25	**8.9** 0.35	**155.7** 6.13
HSY070MM	**70 mm**			
HSY212	2 ¾ in.			
UPF215	2 15⁄16 in.			
HSY300	3 in.			
HSY075MM	**75 mm**			
HSY303	3 3⁄16 in.	**5.1** 0.20	**7.6** 0.30	**181.1** 7.13
HSY304	3 ¼ in.			
HSY080MM	**80 mm**			
HSY085MM	**85 mm**			
HSY307	3 7⁄16 in.			
HSY308	3 ½ in.			
HSY090MM	**90 mm**			
HSY315	3 15⁄16 in.	**5.1** 0.20	**7.6** 0.30	**199.9** 7.87
HSY400	4 in.			
HSY100MM	**100 mm**			
HSY110MM	**110 mm**	**7.6** 0.30	**10.2** 0.40	**245.0** 10.00
HSY407	4 7⁄16 in.			
HSY408	4 ½ in.			
HSY115MM	**115 mm**			

STEEL FLANGE BLOCK BACKING PLATE DIMENSIONS

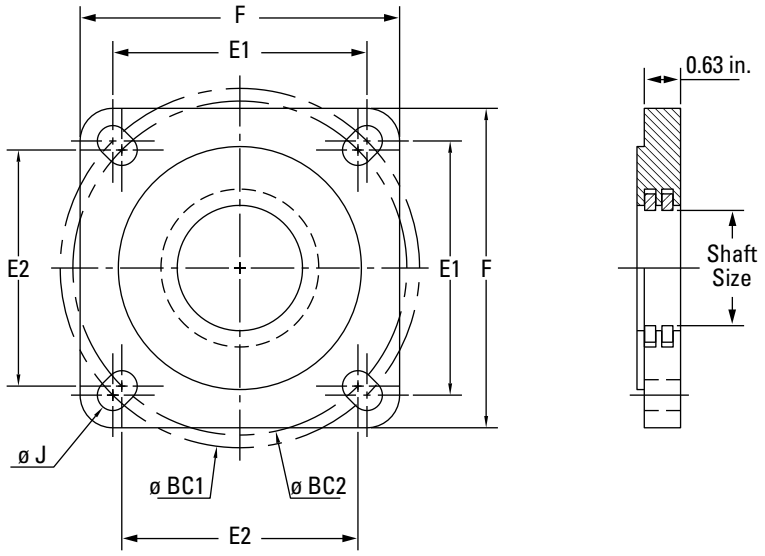

TABLE 19. STEEL BACKING PLATES AVAILABLE IN ECCENTRIC AND SET SCREW LOCKING HOUSING STYLES QMF/QAF AND QMFL/QAFL

Part Number	Shaft Dia.	F	E1	E2	BC1	BC2	J	Bolt Size	Weight
	mm in.	**mm** in.	**mm** in.	**mm** in.	**mm** in.	**mm** in.	**mm [+1.5/-0]** in. [+0.063/-0]	**mm** in.	**kg** lb.
BP10T115S	1 15/16 in.	**139.7** 5.50	**111.1** 4.38	**103.3** 4.07	**157.1** 6.19	**146.1** 5.75	**13.5** 0.53	**12** 1/2	**2.0** 4.5
BP10T200S	2 in.								
BP10T050S	**50 mm**								
BP11T203S	2 3/16 in.	**157.2** 6.19	**123.8** 4.88	**114.5** 4.51	**175.1** 6.89	**161.9** 6.38	**16.7** 0.66	**16** 5/8	**2.8** 6.1
BP11T204S	2 1/4 in.								
BP11T055S	**55 mm**								
BP13T060S	**60 mm**	**168.4** 6.63	**136.5** 5.38	**121.2** 4.77	**193.1** 7.60	**171.5** 6.75	**16.7** 0.66	**16** 5/8	**3.0** 6.7
BP13T207S	2 7/16 in.								
BP13T208S	2 1/2 in.								
BP13T065S	**65 mm**								
BP15T211S	2 11/16 in.	**189.0** 7.44	**152.4** 6.00	**141.4** 5.57	**215.5** 8.49	**200.0** 7.88	**21.0** 0.83	**20** 3/4	**3.9** 8.6
BP15T212S	2 3/4 in.								
BP15T070S	**70 mm**								
BP15T215S	2 15/16 in.								
BP15T300S	3 in.								
BP15T075S	**75 mm**								
BP18T303S	3 3/16 in.	**219.2** 8.63	**178.0** 7.01	**170.6** 6.72	**251.7** 9.91	**241.3** 9.50	**21.0** 0.83	**20** 3/4	**5.4** 12.0
BP18T304S	3 1/4 in.								
BP18T080S	**80 mm**								
BP18T085S	**85 mm**								
BP18T307S	3 7/16 in.								
BP18T308S	3 1/2 in.								
BP18T090S	**90 mm**								
BP20T311S	3 11/16 in.	**253.2** 9.97	**196.9** 7.75	**193.1** 7.60	**278.4** 10.96	**273.1** 10.75	**27.0** 1.06	**24** 7/8	**7.1** 15.6
BP20T312S	3 3/4 in.								
BP20T315S	3 15/16 in.								
BP20T400S	4 in.								
BP20T100S	**100 mm**								
Bore Size 110mm – 115mm only available in QMF/QAF Series Housings									
BP22T110S	**110 mm**	**276.4** 10.88	**222.3** 8.75	N/A	**314.3** 12.38	N/A	**25.0** 0.98	**24** 7/8	**8.4** 18.5
BP22T407S	4 7/16 in.								
BP22T408S	4 1/2 in.								
BP22T115S	**115 mm**								

STEEL BACKING PLATES WITH WITHDRAWAL HOLES

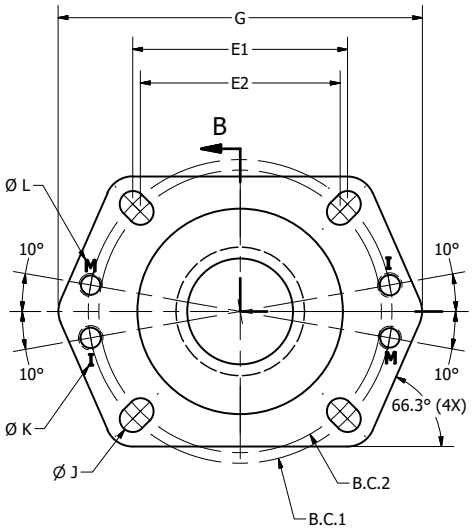

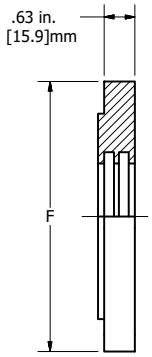

SECTION B-B

TABLE 20. STEEL BACKING PLATE WITH WITHDRAWAL HOLES

Part Number	Shaft Dia.	G	F	E1	E2	BC1	BC2	J	Bolt Size	Weight	Ø K	Ø L
	mm in.	**mm** in.	**mm** in.	**mm** in.	**mm** in.	**mm** in.	**mm** in.	**mm [+1.5/-0]** in. [+0.063/-0]	**mm** in.	**kg** lb.	**in.**	**mm**
BP10T115SW	1 15/16 in.	**188.4** 7.42	**139.7** 5.50	**111.1** 4.38	**103.3** 4.07	**157.1** 6.19	**146.1** 5.75	**13.5** 0.53	**12** 1/2	**2.4** 5.5	1/2-13 UNC -2B	M12x1.75 - 6H
BP10T200SW	2 in.											
BP10T050SW	**50 mm**											
BP11T203SW	2 3/16 in.	**215.1** 8.47	**157.2** 6.19	**123.8** 4.88	**114.5** 4.51	**175.1** 6.89	**161.9** 6.38	**16.7** 0.66	**16** 5/8	**3.1** 6.9	5/8-11 UNC -2B	M16x2 - 6H
BP11T204SW	2 1/4 in.											
BP11T055SW	**55 mm**											
BP13T060SW	**60 mm**	**227.2** 8.94	**168.4** 6.63	**136.5** 5.38	**121.2** 4.77	**193.1** 7.60	**171.5** 6.75	**16.7** 0.66	**16** 5/8	**3.6** 7.9	5/8-11 UNC -2B	M16x2 - 6H
BP13T207SW	2 7/16 in.											
BP13T208SW	2 1/2 in.											
BP13T065SW	**65 mm**											
BP15T211SW	2 11/16 in.	**255.9** 10.07	**189.0** 7.44	**152.4** 6.00	**141.4** 5.57	**215.5** 8.49	**200.0** 7.88	**21.0** 0.83	**20** 3/4	**4.4** 9.7	3/4-10 UNC -2B	M20x2.5 - 6H
BP15T212SW	2 3/4 in.											
BP15T070SW	**70 mm**											
BP15T215SW	2 15/16 in.											
BP15T300SW	3 in.											
BP15T075SW	**75 mm**											
BP18T303SW	3 3/16 in.	**293.1** 11.54	**219.2** 8.63	**178.0** 7.01	**170.6** 6.72	**251.7** 9.91	**241.3** 9.50	**21.0** 0.83	**20** 3/4	**6.1** 13.5	3/4-10 UNC -2B	M20x2.5 - 6H
BP18T304SW	3 1/4 in.											
BP18T080SW	**80 mm**											
BP18T085SW	**85 mm**											
BP18T307SW	3 7/16 in.											
BP18T308SW	3 1/2 in.											
BP18T090SW	**90 mm**											
BP20T311SW	3 11/16 in.	**342.1** 13.47	**253.2** 9.97	**196.9** 7.75	**193.0** 7.60	**278.4** 10.96	**273.0** 10.75	**27.0** 1.06	**24** 1	**8.5** 18.9	1-8 UNC -2B	M24x3 - 6H
BP20T312SW	3 3/4 in.											
BP20T315SW	3 15/16 in.											
BP20T400SW	4 in.											
BP20T100SW	**100 mm**											
BP22T110SW	**110 mm**	**375.4** 14.78	**276.4** 10.88	**222.3** 8.75	N/A	**314.3** 12.38	N/A	**25.0** 0.98	**24** 7/8	**9.8** 21.6	1-8 UNC -2B	M24x3 - 6H
BP22T407SW	4 7/16 in.											
BP22T408SW	4 1/2 in.											
BP22T115SW	**115 mm**											

BEARING LOADS

Solid-block mounted bearings are excellent for many applications including those with:

- Heavy radial loads
- Heavy combined radial and thrust loads
- Shock loads
- Harsh contamination conditions
- Low-to-moderate speeds
- The possibility of misalignment

Bearing loads generally come from one of three sources that should all be evaluated and considered when selecting steel mounted bearings for your application. Contact your Timken engineer for assistance in determining specific application loads and for bearing recommendations.

- Static loads – weights of various components supported by the bearings
- Drive loads – belts, chains or gears that exert forces on the shaft
- Imposed loads – forces generated by equipment operation

Generally, bearing loads are described as being radial (load perpendicular to the axis of the shaft) or axial (load parallel to the axis of the shaft). Axial loads also are referred to as thrust loads. Spherical roller bearings, by design, are very capable of accepting heavy radial loads, even when combined with a thrust load. Timken® Type E mounted bearings are recommended for use in applications when only thrust loads are present or when the thrust component of the load is larger than the radial component. Contact a Timken sales engineer for more information.

To determine the allowable radial load at various RPMs for bearings supporting only radial loads, simply use the charts on pages 36 – 54. For bearings supporting both radial and thrust loads, an equivalent radial load must first be calculated prior to using these tables (see DYNAMIC EQUIVALENT RADIAL LOAD on page 35).

BELT LOADS

V-belt drives are common sources of drive loads. A good approximation of drive load may be calculated from the formula:

Drive Load = (HP x 189000)/(Pulley Diameter x RPM)
Drive Load = (KW x 189000)/(Pulley Diameter x RPM)

LOAD SHARING

In some cases, bearings may share the load unequally, depending on their position in relationship to the load. Use the appropriate formula below to determine the drive load on each bearing:

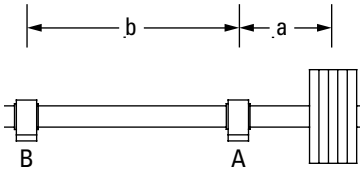

Load A = Drive Load x (a + b)/b
Load B = Drive Load x a/b

Fig. 30. Overhung load.

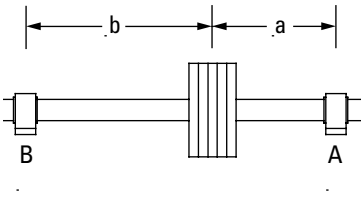

Load A = (Drive Load x b)/(a + b)
Load B = (Drive Load x a)/(a + b)

Fig. 31. Load between bearings.

DYNAMIC EQUIVALENT RADIAL LOAD

Bearings that support a combination of radial load and thrust load take an unequal load on one of the rows of rollers. The following formulas and bearing geometry factors are used to convert the independent thrust and radial loads into a single equivalent radial load. The calculated dynamic equivalent radial load (P_r) will have the same effect on bearing life (L_{10}) as a radial load of the same magnitude.

$P_r = F_r + (Y1 \times F_a)$ when $F_a/F_r \leq e$

$P_r = (0.67 \times F_r) + (Y2 \times F_a)$ when $F_a/F_r > e$

where:

P_r = Dynamic equivalent radial load
F_r = Applied radial load (lbs., N)
F_a = Applied thrust (axial) load (lbs., N)
Y1, Y2 and e are bearing geometry factors shown on pages 36 – 38.

BEARING CALCULATED LIFE

Customers select the bearing life of the bearings in equipment they are building. In the absence of a customer bearing life target, the following may be considered as a guideline:

- If the customer's machinery operates eight hours a day, then use a bearing life target of 20000 to 30000 hours.
- If the customer's machinery operates 24 hours a day, then use a bearing life target of 40000 to 60000 hours.

In addition, a service factor may be used where application conditions are harsh. Extreme environmental conditions, heavy shock or vibration may require an adjustment of load ratings before referring to the L_{10} tables.

Standard spherical roller bearing life calculation:

Bearing life = $L_{10} = (C/P_r)^{10/3} \times (16667/RPM)$

where:

C = Dynamic capacity (lbs., N)
P_r = Radial load/dynamic equivalent radial load
RPM = Revolutions per minute

A NOTE ON MINIMUM LOADS

In order for a spherical roller bearing to perform as designed, some radial load should be present. This is particularly true if the bearing is running at high speed. Although it is rarely an issue, as the existing static loads (weights of the combined supported components) usually provide an adequate radial load, there are times when it may be necessary to use a shaft diameter larger than the actual loads require. In these instances, the load becomes a small percentage of the bearing's capacity. Radial loads less than 4 percent of C should be avoided.

BEARING RADIAL AND THRUST FACTORS

TABLE 21. V-LOCK SERIES (TAPERED BORE, C3)

Shaft Dia.	Bearing No.	Dynamic Capacity C	Static Capacity C_0	Equivalent Radial Load Factors		
				e	Y1	Y2
mm in.		**kN** lbs.	**kN** lbs.			
50 1 15/16, 2	22211	**140** 31400	**142** 31900	0.23	2.95	4.40
55 2 3/16, 2 1/4	22212	**169** 38100	**174** 39000	0.24	2.84	4.23
55 2 3/16, 2 1/4	22213	**206** 46400	**216** 48600	0.24	2.79	4.15
60, 65 2 7/16, 2 1/2	22214	**213** 47800	**231** 52000	0.23	2.90	4.32
60, 65 2 7/16, 2 1/2	22215	**222** 49900	**240** 54100	0.22	3.14	4.67
70, 75 2 11/16, 2 3/4, 2 15/16, 3	22216	**254** 57200	**278** 62500	0.22	3.14	4.67
70, 75 2 11/16, 2 3/4, 2 15/16, 3	22217	**297** 66900	**320** 71900	0.22	3.07	4.57
80, 85, 90 3 3/16, 3 1/4, 3 7/16, 3 1/2	22219	**385** 86600	**441** 99000	0.23	2.88	4.29
80, 85, 90 3 3/16, 3 1/4, 3 7/16, 3 1/2	22220	**435** 97700	**502** 113000	0.24	2.85	4.24
100 3 11/16, 3 3/4, 3 15/16, 4	22222	**555** 125000	**653** 147000	0.25	2.73	4.06
110 –	22224	**647** 145000	**772** 174000	0.25	2.70	4.02
110, 115 4 7/16, 4 1/2	22226	**757** 170000	**945** 212000	0.26	2.62	3.90
125, 130 4 15/16, 5	22228	**863** 194000	**1060** 237000	0.25	2.67	3.98

TABLE 22. CL SERIES (STRAIGHT BORE, C NORMAL)

Shaft Dia.	Bearing No.	Dynamic Capacity C	Static Capacity C_0	Equivalent Radial Load Factors		
				e	Y1	Y2
mm in.		**kN** lbs.	**kN** lbs.			
35 1 7/16, 1 1/2	22208	**104** 23400	**99.7** 22400	0.27	2.47	3.67
40, 45 1 11/16, 1 3/4	22209	**109** 24500	**108** 24200	0.26	2.64	3.93
50 1 15/16, 2	22210	**117** 26300	**118** 26600	0.24	2.84	4.23
55 2 3/16, 2 1/4	22211	**140** 31400	**142** 31900	0.23	2.95	4.40
60, 65 2 7/16, 2 1/2	22213	**206** 46400	**216** 48600	0.24	2.79	4.15
70, 75 2 11/16, 2 3/4, 2 15/16, 3	22215	**222** 49900	**240** 54100	0.22	3.14	4.67
80, 85, 90 3 3/16, 3 1/4, 3 7/16, 3 1/2	22218	**355** 79700	**388** 87200	0.23	2.90	4.31
100 3 15/16, 4	22220	**435** 97700	**502** 113000	0.24	2.85	4.24
110, 115 4 7/16, 4 1/2	22222	**555** 125000	**653** 147000	0.25	2.73	4.06
125, 130 4 15/16, 5	22226	**757** 170000	**945** 212000	0.26	2.62	3.90

TABLE 23. EC SERIES (STRAIGHT BORE, C NORMAL)

Shaft Dia.	Bearing No.	Dynamic Capacity C	Static Capacity C_0	Equivalent Radial Load Factors		
				e	Y1	Y2
mm in.		**kN** lbs.	**kN** lbs.			
35 1 7/16, 1 1/2	22208	**104** 23400	**99.7** 22400	0.27	2.47	3.67
40, 45 1 11/16, 1 3/4	22209	**109** 24500	**108** 24200	0.26	2.64	3.93
50 1 15/16, 2	22210	**117** 26300	**118** 26600	0.24	2.84	4.23
55 2 3/16, 2 1/4	22211	**140** 31400	**142** 31900	0.23	2.95	4.40
60, 65 2 7/16, 2 1/2	22213	**206** 46400	**216** 48600	0.24	2.79	4.15
70, 75 2 11/16, 2 3/4, 2 15/16, 3	22215	**222** 49900	**240** 54100	0.22	3.14	4.67
80, 85, 90 3 3/16, 3 1/4, 3 7/16, 3 1/2	22218	**355** 79700	**388** 87200	0.23	2.90	4.31
100 3 11/16, 3 3/4, 3 15/16, 4	22220	**435** 97700	**502** 113000	0.24	2.85	4.24
110, 115 4 7/16, 4 1/2	22222	**555** 125000	**653** 147000	0.25	2.73	4.06
125, 130 4 15/16, 5	22226	**757** 170000	**945** 212000	0.26	2.62	3.90
140, 150 5 7/16, 5 1/2, 5 15/16, 6	23230	**1270** 286000	**1660** 372000	0.32	2.08	3.10
170, 180 6 7/16, 6 1/2, 6 15/16, 7	23234	**1660** 373000	**2200** 494000	0.33	2.08	3.09

BEARING RADIAL AND THRUST FACTORS – *continued*

TABLE 24. TA/TAA DV/DAA SERIES (TAPERED BORE, C3)

Shaft Dia.	Bearing No.	Dynamic Capacity C	Static Capacity C_0	Equivalent Radial Load Factors		
				e	Y1	Y2
mm in.		**kN** lbs.	**kN** lbs.			
40 1 7/16, 1 1/2	22209	**109** 24500	**108** 24200	0.26	2.64	3.93
45 1 11/16, 1 3/4	22210	**117** 26300	**118** 26600	0.24	2.84	4.23
50 1 15/16, 2	22211	**140** 31400	**142** 31900	0.23	2.95	4.40
55 –	22212	**169** 38100	**174** 39000	0.24	2.84	4.23
60 2 3/16, 2 3/16	22213	**206** 46400	**216** 48600	0.24	2.79	4.15
65 2 7/16, 2 1/2	22215	**222** 49900	**240** 54100	0.22	3.14	4.67
70 2 11/16, 2 3/4	22216	**254** 57200	**278** 62500	0.22	3.14	4.67
75 2 15/16, 3	22217	**297** 66900	**320** 71900	0.22	3.07	4.57
80 3 3/16, 3 3/16	22218	**355** 79700	**388** 87200	0.23	2.90	4.31
85 –	22219	**385** 86600	**441** 99000	0.23	2.88	4.29
90 3 7/16, 3 1/2	22220	**435** 97700	**502** 113000	0.24	2.85	4.24
100 3 11/16, 3 3/4, 3 15/16, 4	22222	**555** 125000	**653** 147000	0.25	2.73	4.06
110 4 3/16, 4 1/4	22224	**647** 145000	**772** 174000	0.25	2.70	4.02
115 4 7/16, 4 1/2	22226	**757** 170000	**945** 212000	0.26	2.62	3.90
125 4 15/16, 5	22228	**863** 194000	**1060** 237000	0.25	2.67	3.98
135 5 3/16, 5 1/4	23130	**1000** 225000	**1390** 312000	0.29	2.34	3.45
140 5 3/8, 5 7/16, 5 1/2	23132	**1160** 261000	**1580** 355000	0.29	2.33	3.46
150 5 13/16, 5 7/8, 5 15/16, 6	23134	**1220** 274000	**1710** 384000	0.28	2.39	3.55
160 6 5/16, 6 3/8, 6 7/16, 6 1/2	23136	**1410** 317000	**2000** 450000	0.29	2.32	3.45
170 6 13/16, 6 7/8, 6 15/16, 7	23138	**1630** 366000	**2340** 526000	0.30	2.26	3.36
180 7 1/8, 7 3/16, 7 1/4	23140	**1660** 373000	**2290** 515000	0.31	2.15	3.20
200 7 13/16, 7 7/8, 7 15/16, 8	23144	**1940** 436000	**2740** 616000	0.31	2.17	3.24
220 8 7/16, 8 1/2, 8 15/16, 9	23148	**2200** 495000	**3180** 715000	0.30	2.28	3.40
240 9 7/16, 9 1/2	23152	**2440** 549000	**3910** 879000	0.30	2.23	3.31
260 9 15/16, 10, 10 7/16, 10 1/2	23156	**2530** 569000	**4140** 931000	0.30	2.26	3.36
280 10 15/16, 11	23160	**3070** 690000	**5110** 1149000	0.30	2.25	3.35
300 11 7/16, 11 1/2, 11 15/16, 12	23164	**3650** 821000	**5930** 1333000	0.31	2.14	3.19
320 12 7/16, 12 1/2	23168	**4110** 924000	**6830** 1535000	0.30	2.22	3.30
340 12 15/16, 13, 13 7/16, 13 1/2	23172	**4250** 955000	**7280** 1637000	0.29	2.29	3.42
360 13 15/16, 14	23176	**4490** 1009000	**7580** 1704000	0.30	2.28	3.39
380 14 15/16, 15	23180	**4770** 1072000	**8110** 1823000	0.29	2.32	3.46

LOAD RATINGS

TABLE 25. V-LOCK SERIES – ALLOWABLE RADIAL LOAD (kN/LBS.) AT VARIOUS RPM[1]

Shaft Diameter	Bearing No.	C	L_{10} Life	Speed[2]													
mm in.		**kN** lbs.		RPM													
				50	100	200	500	1000	1200	1500	1800	2100	2400	2700	3000	3200	3500[1]
50 1 15/16, 2	22211	**140** 31400	10000	**50.3** 11319	**40.9** 9194	**33.2** 7468	**25.2** 5673	**20.5** 4608	**19.4** 4362	**18.1** 4080	**17.2** 3863	**16.4** 3688	**15.8** 3543	**15.2** 3420	**14.7** 3314	**14.5** 3250	**14.1** 3164
			30000	**36.2** 8141	**29.4** 6612	**23.9** 5371	**18.1** 4080	**14.7** 3314	**14.0** 3138	**13.1** 2934	**12.4** 2778	**11.8** 2653	**11.3** 2549	**10.9** 2460	**10.6** 2383	**10.4** 2338	**10.1** 2276
			40000	**33.2** 7468	**27.0** 6066	**21.9** 4927	**16.6** 3743	**13.5** 3040	**12.8** 2878	**12.0** 2692	**11.3** 2549	**10.8** 2433	**10.4** 2338	**10.0** 2257	**9.7** 2186	**9.5** 2144	**9.3** 2088
			60000	**29.4** 6612	**23.9** 5371	**19.4** 4362	**14.7** 3314	**12.0** 2692	**11.3** 2549	**10.6** 2383	**10.0** 2257	**9.6** 2155	**9.2** 2070	**8.9** 1998	**8.6** 1936	**8.4** 1899	**8.2** 1849
			100000	**25.2** 5673	**20.5** 4608	**16.6** 3743	**12.6** 2843	**10.3** 2309	**9.7** 2186	**9.1** 2045	**8.6** 1936	**8.2** 1849	**7.9** 1776	**7.6** 1714	**7.4** 1661	**7.2** 1629	**7.1** 1586
				50	100	200	500	1000	1200	1500	1800	2100	2400	2700	3000	3200[1]	3500[1]
55 2 3/16, 2 1/4	22212	**169** 38100	10000	**61.1** 13734	**49.6** 11155	**40.3** 9061	**30.6** 6883	**24.9** 5591	**23.5** 5293	**22.0** 4951	**20.8** 4687	**19.9** 4475	**19.1** 4300	**18.5** 4150	**17.9** 4021	**17.5** 3944	**17.1** 3839
			30000	**43.9** 9878	**35.7** 8023	**29.0** 6517	**22.0** 4951	**17.9** 4021	**16.9** 3807	**15.8** 3561	**15.0** 3371	**14.3** 3219	**13.8** 3092	**13.3** 2985	**12.9** 2892	**12.6** 2837	**12.3** 2761
			40000	**40.3** 9061	**32.7** 7360	**26.6** 5978	**20.2** 4541	**16.4** 3689	**15.5** 3492	**14.5** 3266	**13.8** 3092	**13.1** 2953	**12.6** 2837	**12.2** 2738	**11.8** 2653	**11.6** 2602	**11.3** 2533
			60000	**35.7** 8023	**29.0** 6517	**23.5** 5293	**17.9** 4021	**14.5** 3266	**13.8** 3092	**12.9** 2892	**12.2** 2738	**11.6** 2614	**11.2** 2512	**10.8** 2425	**10.4** 2349	**10.2** 2304	**10.0** 2243
			100000	**30.6** 6883	**24.9** 5591	**20.2** 4541	**15.3** 3450	**12.5** 2802	**11.8** 2653	**11.0** 2481	**10.4** 2349	**10.0** 2243	**9.6** 2155	**9.3** 2080	**9.0** 2015	**8.8** 1977	**8.6** 1924
				50	100	200	500	1000	1200	1500	1800	2100	2400	2700	3000[1]	3200[1]	3500[1]
55 2 3/16, 2 1/4	22213	**206** 46400	10000	**74.4** 16726	**60.4** 13585	**49.1** 11035	**37.3** 8383	**30.3** 6809	**28.7** 6446	**26.8** 6029	**25.4** 5708	**24.2** 5450	**23.3** 5236	**22.5** 5054	**21.8** 4897	**21.4** 4803	**20.8** 4676
			30000	**53.5** 12030	**43.5** 9771	**35.3** 7937	**26.8** 6029	**21.8** 4897	**20.6** 4636	**19.3** 4336	**18.3** 4105	**17.4** 3920	**16.8** 3766	**16.2** 3635	**15.7** 3522	**15.4** 3455	**15.0** 3363
			40000	**49.1** 11035	**39.9** 8963	**32.4** 7280	**24.6** 5531	**20.0** 4492	**18.9** 4253	**17.7** 3978	**16.8** 3766	**16.0** 3596	**15.4** 3455	**14.8** 3335	**14.4** 3231	**14.1** 3169	**13.7** 3085
			60000	**43.5** 9771	**35.3** 7937	**28.7** 6446	**21.8** 4897	**17.7** 3978	**16.8** 3766	**15.7** 3522	**14.8** 3335	**14.2** 3184	**13.6** 3059	**13.1** 2953	**12.7** 2861	**12.5** 2806	**12.2** 2732
			100000	**37.3** 8383	**30.3** 6809	**24.6** 5531	**18.7** 4201	**15.2** 3413	**14.4** 3231	**13.4** 3022	**12.7** 2861	**12.2** 2732	**11.7** 2624	**11.3** 2533	**10.9** 2454	**10.7** 2407	**10.4** 2343
				50	100	200	500	1000	1200	1500	1800	2100	2400	2700[1]	3000[1]	3200[1]	
60, 65 2 7/16, 2 1/2	22214	**213** 47800	10000	**76.6** 17230	**62.3** 13995	**50.6** 11368	**38.4** 8636	**31.2** 7014	**29.5** 6641	**27.6** 6211	**26.2** 5880	**25.0** 5615	**24.0** 5394	**23.2** 5207	**22.4** 5045	**22.0** 4948	
			30000	**55.1** 12392	**44.8** 10066	**36.4** 8176	**27.6** 6211	**22.4** 5045	**21.2** 4776	**19.9** 4467	**18.8** 4229	**18.0** 4038	**17.3** 3880	**16.7** 3745	**16.1** 3628	**15.8** 3559	
			40000	**50.6** 11368	**41.1** 9234	**33.4** 7500	**25.3** 5697	**20.6** 4628	**19.5** 4381	**18.2** 4098	**17.3** 3880	**16.5** 3704	**15.8** 3559	**15.3** 3435	**14.8** 3328	**14.5** 3265	
			60000	**44.8** 10066	**36.4** 8176	**29.5** 6641	**22.4** 5045	**18.2** 4098	**17.3** 3880	**16.1** 3628	**15.3** 3435	**14.6** 3280	**14.0** 3151	**13.5** 3042	**13.1** 2947	**12.9** 2891	
			100000	**38.4** 8636	**31.2** 7014	**25.3** 5697	**19.3** 4328	**15.6** 3515	**14.8** 3328	**13.8** 3113	**13.1** 2947	**12.5** 2814	**12.0** 2703	**11.6** 2610	**11.2** 2528	**11.0** 2480	
				50	100	200	500	1000	1200	1500	1800	2100	2400	2700[1]	3000[1]	3200[1]	

[1]Speeds referenced here may be higher than speed rating for seals. Please refer to the charts on pages 57 – 59.
[2]For speeds greater than thermal reference speed, contact your Timken engineer.

Continued on next page.

LOAD RATINGS – *continued*

TABLE 25. V-LOCK SERIES – ALLOWABLE RADIAL LOAD (kN/LBS.) AT VARIOUS RPM[1] (CONTINUED)

Shaft Diameter	Bearing No.	C	L_{10} Life	Speed[2]												
mm in.		**kN** lbs.		RPM												
60, 65 2 7/16, 2 1/2	22215	**222** 49900	10000	**80.0** 17987	**65.0** 14610	**52.8** 11867	**40.1** 9015	**32.6** 7322	**30.8** 6933	**28.8** 6484	**27.3** 6139	**26.1** 5861	**25.0** 5631	**24.2** 5436	**23.4** 5266	**23.0** 5166
			30000	**57.5** 12937	**46.7** 10508	**38.0** 8535	**28.8** 6484	**23.4** 5266	**22.2** 4986	**20.7** 4663	**19.6** 4415	**18.8** 4216	**18.0** 4050	**17.4** 3909	**16.8** 3788	**16.5** 3715
			40000	**52.8** 11867	**42.9** 9639	**34.8** 7829	**26.5** 5948	**21.5** 4831	**20.3** 4574	**19.0** 4278	**18.0** 4050	**17.2** 3867	**16.5** 3715	**16.0** 3586	**15.5** 3475	**15.2** 3408
			60000	**46.7** 10508	**38.0** 8535	**30.8** 6933	**23.4** 5266	**19.0** 4278	**18.0** 4050	**16.8** 3788	**16.0** 3586	**15.2** 3424	**14.6** 3290	**14.1** 3175	**13.7** 3077	**13.4** 3018
			100000	**40.1** 9015	**32.6** 7322	**26.5** 5948	**20.1** 4518	**16.3** 3670	**15.5** 3475	**14.5** 3250	**13.7** 3077	**13.1** 2938	**12.6** 2822	**12.1** 2724	**11.7** 2639	**11.5** 2589
				50	100	200	500	1000	1200	1500	1800	2100	2400[1]	2700[1]	3000[1]	
70, 75 2 11/16, 2 3/4, 2 15/16, 3	22216	**254** 57200	10000	**91.7** 20619	**74.5** 16748	**60.5** 13603	**46.0** 10334	**37.3** 8394	**35.4** 7947	**33.1** 7432	**31.3** 7037	**29.9** 6719	**28.7** 6455	**27.7** 6231	**26.9** 6037	
			30000	**66.0** 14829	**53.6** 12045	**43.5** 9784	**33.1** 7432	**26.9** 6037	**25.4** 5716	**23.8** 5346	**22.5** 5061	**21.5** 4832	**20.7** 4643	**19.9** 4481	**19.3** 4342	
			40000	**60.5** 13603	**49.1** 11049	**39.9** 8975	**30.3** 6818	**24.6** 5538	**23.3** 5243	**21.8** 4904	**20.7** 4643	**19.7** 4433	**18.9** 4259	**18.3** 4111	**17.7** 3983	
			60000	**53.6** 12045	**43.5** 9784	**35.4** 7947	**26.9** 6037	**21.8** 4904	**20.7** 4643	**19.3** 4342	**18.3** 4111	**17.5** 3925	**16.8** 3771	**16.2** 3640	**15.7** 3527	
			100000	**46.0** 10334	**37.3** 8394	**30.3** 6818	**23.0** 5179	**18.7** 4207	**17.7** 3983	**16.6** 3725	**15.7** 3527	**15.0** 3367	**14.4** 3235	**13.9** 3123	**13.5** 3026	
				50	100	200	500	1000	1200	1500	1800	2100[1]	2400[1]	2700[1]		
70, 75 2 11/16, 2 3/4, 2 15/16, 3	22217	**297** 66900	10000	**107.3** 24115	**87.1** 19588	**70.8** 15910	**53.8** 12086	**43.7** 9817	**41.3** 9295	**38.7** 8693	**36.6** 8230	**35.0** 7858	**33.6** 7550	**32.4** 7287		
			30000	**77.1** 17344	**62.7** 14088	**50.9** 11443	**38.7** 8693	**31.4** 7061	**29.7** 6685	**27.8** 6252	**26.3** 5919	**25.1** 5652	**24.2** 5430	**23.3** 5241		
			40000	**70.8** 15910	**57.5** 12923	**46.7** 10497	**35.5** 7974	**28.8** 6477	**27.3** 6132	**25.5** 5735	**24.2** 5430	**23.1** 5184	**22.2** 4981	**21.4** 4808		
			60000	**62.7** 14088	**50.9** 11443	**41.3** 9295	**31.4** 7061	**25.5** 5735	**24.2** 5430	**22.6** 5078	**21.4** 4808	**20.4** 4591	**19.6** 4410	**18.9** 4257		
			100000	**53.8** 12086	**43.7** 9817	**35.5** 7974	**26.9** 6057	**21.9** 4920	**20.7** 4658	**19.4** 4357	**18.3** 4125	**17.5** 3938	**16.8** 3784	**16.2** 3652		
				50	100	200	500	1000	1200	1500	1800	2100[1]	2400[1]	2700[1]		
80, 85, 90 3 3/16, 3 1/4, 3 7/16, 3 1/2	22219	**385** 86600	10000	**138.9** 31216	**112.8** 25356	**91.6** 20595	**69.6** 15645	**56.5** 12708	**53.5** 12032	**50.1** 11252	**47.4** 10654	**45.2** 10172	**43.5** 9773	**42.0** 9433		
			30000	**99.9** 22452	**81.1** 18236	**65.9** 14813	**50.1** 11252	**40.7** 9140	**38.5** 8653	**36.0** 8093	**34.1** 7662	**32.5** 7316	**31.3** 7029	**30.2** 6785		
			40000	**91.6** 20595	**74.4** 16729	**60.4** 13588	**45.9** 10322	**37.3** 8384	**35.3** 7938	**33.0** 7424	**31.3** 7029	**29.9** 6711	**28.7** 6448	**27.7** 6224		
			60000	**81.1** 18236	**65.9** 14813	**53.5** 12032	**40.7** 9140	**33.0** 7424	**31.3** 7029	**29.2** 6574	**27.7** 6224	**26.4** 5942	**25.4** 5709	**24.5** 5511		
			100000	**69.6** 15645	**56.5** 12708	**45.9** 10322	**34.9** 7841	**28.3** 6369	**26.8** 6030	**25.1** 5640	**23.7** 5339	**22.7** 5098	**21.8** 4898	**21.0** 4728		

[1]Speeds referenced here may be higher than speed rating for seals. Please refer to the charts on pages 57 – 59.
[2]For speeds greater than thermal reference speed, contact your Timken engineer.

Continued on next page.

Continued from previous page.

Shaft Diameter	Bearing No.	C	L_{10} Life	Speed[2]										
mm in.		**kN** lbs.		RPM										
				50	100	200	500	1000	1200	1500	1800[1]	2100[1]	2400[1]	2700[1]
80, 85, 90 3 3⁄16, 3 1⁄4, 3 7⁄16, 3 1⁄2	22220	**435** 97700	10000	**156.7** 35218	**127.2** 28606	**103.4** 23235	**78.5** 17651	**63.8** 14337	**60.4** 13574	**56.5** 12695	**53.5** 12019	**51.0** 11476	**49.0** 11025	**47.3** 10642
			30000	**112.7** 25329	**91.5** 20574	**74.3** 16711	**56.5** 12695	**45.9** 10311	**43.4** 9762	**40.6** 9130	**38.5** 8644	**36.7** 8254	**35.3** 7930	**34.0** 7654
			40000	**103.4** 23235	**84.0** 18873	**68.2** 15329	**51.8** 11645	**42.1** 9459	**39.8** 8955	**37.3** 8375	**35.3** 7930	**33.7** 7571	**32.4** 7274	**31.2** 7021
			60000	**91.5** 20574	**74.3** 16711	**60.4** 13574	**45.9** 10311	**37.3** 8375	**35.3** 7930	**33.0** 7416	**31.2** 7021	**29.8** 6704	**28.7** 6441	**27.7** 6217
			100000	**78.5** 17651	**63.8** 14337	**51.8** 11645	**39.3** 8846	**32.0** 7185	**30.3** 6803	**28.3** 6362	**26.8** 6024	**25.6** 5752	**24.6** 5526	**23.7** 5334
				50	100	200	500	1000	1200	1500[1]	1800[1]	2100[1]	2400[1]	
100 3 11⁄16, 3 3⁄4, 3 15⁄16, 4	22222	**555** 125000	10000	**200.4** 45058	**162.8** 36599	**132.2** 29727	**100.5** 22583	**81.6** 18343	**77.3** 17367	**72.2** 16242	**68.4** 15377	**65.3** 14683	**62.7** 14106	
			30000	**144.2** 32407	**117.1** 26323	**95.1** 21381	**72.2** 16242	**58.7** 13193	**55.6** 12490	**52.0** 11682	**49.2** 11060	**47.0** 10560	**45.1** 10145	
			40000	**132.2** 29727	**107.4** 24146	**87.2** 19613	**66.3** 14899	**53.8** 12102	**51.0** 11458	**47.7** 10716	**45.1** 10145	**43.1** 9687	**41.4** 9306	
			60000	**117.1** 26323	**95.1** 21381	**77.3** 17367	**58.7** 13193	**47.7** 10716	**45.1** 10145	**42.2** 9488	**40.0** 8983	**38.2** 8577	**36.7** 8241	
			100000	**100.5** 22583	**81.6** 18343	**66.3** 14899	**50.3** 11318	**40.9** 9193	**38.7** 8704	**36.2** 8140	**34.3** 7707	**32.7** 7359	**31.4** 7070	
				50	100	200	500	1000	1200	1500	1800	2100	2400	
110 –	22224	**647** 145000	10000	**232.5** 52268	**188.8** 42455	**153.4** 34484	**116.5** 26196	**94.6** 21278	**89.6** 20145	**83.8** 18841	**79.3** 17838	**75.8** 17032	**72.8** 16363	
			30000	**167.2** 37592	**135.8** 30534	**110.3** 24802	**83.8** 18841	**68.1** 15303	**64.5** 14489	**60.3** 13551	**57.1** 12829	**54.5** 12250	**52.4** 11769	
			40000	**153.4** 34484	**124.6** 28010	**101.2** 22751	**76.9** 17283	**62.4** 14038	**59.1** 13291	**55.3** 12430	**52.4** 11769	**50.0** 11237	**48.0** 10796	
			60000	**135.8** 30534	**110.3** 24802	**89.6** 20145	**68.1** 15303	**55.3** 12430	**52.4** 11769	**49.0** 11007	**46.4** 10421	**44.3** 9950	**42.5** 9559	
			100000	**116.5** 26196	**94.6** 21278	**76.9** 17283	**58.4** 13129	**47.4** 10664	**44.9** 10097	**42.0** 9443	**39.8** 8940	**38.0** 8536	**36.5** 8201	

[1]Speeds referenced here may be higher than speed rating for seals. Please refer to the charts on pages 57 – 59.
[2]For speeds greater than thermal reference speed, contact your Timken engineer.

Continued on next page.

LOAD RATINGS – *continued*

TABLE 25. V-LOCK SERIES – ALLOWABLE RADIAL LOAD (kN/LBS.) AT VARIOUS RPM[1] (CONTINUED)

Shaft Diameter	Bearing No.	C	L_{10} Life	Speed[2]								
mm in.		**kN** lbs.		RPM								
				50	100	200	500	1000	1200[1]	1500[1]	1800[1]	2100[1]
110, 115 4 7/16, 4 1/2	22226	**757** 170000	10000	**272.6** 61279	**221.4** 49774	**179.8** 40429	**136.6** 30712	**111.0** 24946	**105.1** 23618	**98.3** 22089	**93.0** 20913	**88.8** 19968
			30000	**196.1** 44074	**159.2** 35799	**129.3** 29078	**98.3** 22089	**79.8** 17942	**75.6** 16987	**70.7** 15887	**66.9** 15041	**63.9** 14362
			40000	**179.8** 40429	**146.1** 32839	**118.6** 26673	**90.1** 20263	**73.2** 16458	**69.3** 15582	**64.8** 14573	**61.4** 13798	**58.6** 13174
			60000	**159.2** 35799	**129.3** 29078	**105.1** 23618	**79.8** 17942	**64.8** 14573	**61.4** 13798	**57.4** 12904	**54.3** 12217	**51.9** 11665
			100000	**136.6** 30712	**111.0** 24946	**90.1** 20263	**68.5** 15393	**55.6** 12503	**52.7** 11837	**49.2** 11071	**46.6** 10482	**44.5** 10008
				50	100	200	500	1000[1]	1200[1]	1500[1]	1800[1]	
125, 130 4 15/16, 5	22228	**863** 194000	10000	**311.1** 69931	**252.7** 56801	**205.2** 46137	**155.9** 35048	**126.6** 28468	**119.9** 26953	**112.1** 25208	**106.2** 23866	
			30000	**223.7** 50296	**181.7** 40853	**147.6** 33183	**112.1** 25208	**91.1** 20475	**86.2** 19385	**80.6** 18130	**76.4** 17165	
			40000	**205.2** 46137	**166.7** 37475	**135.4** 30439	**102.9** 23123	**83.5** 18782	**79.1** 17782	**74.0** 16631	**70.0** 15746	
			60000	**181.7** 40853	**147.6** 33183	**119.9** 26953	**91.1** 20475	**74.0** 16631	**70.0** 15746	**65.5** 14726	**62.0** 13942	
			100000	**155.9** 35048	**126.6** 28468	**102.9** 23123	**78.1** 17566	**63.5** 14268	**60.1** 13508	**56.2** 12634	**53.2** 11961	

[1]Speeds referenced here may be higher than speed rating for seals. Please refer to the charts on pages 57 – 59.
[2]For speeds greater than thermal reference speed, contact your Timken engineer.

TABLE 26. CL SERIES – ALLOWABLE RADIAL LOAD (kN/LBS.) AT VARIOUS RPM[1]

Shaft Diameter	Bearing No.	C	L_{10} Life	Speed[2]													
mm in.		**kN** lbs.		RPM													
				50	100	200	500	1000	1200	1500	1800	2100	2400	2700	3000	3200	3500
35 1 7/16, 1 ½	22208	**104** 23400	10000	**37.5** 8435	**30.5** 6851	**24.8** 5565	**18.8** 4227	**15.3** 3434	**14.5** 3251	**13.5** 3041	**12.8** 2879	**12.2** 2749	**11.7** 2641	**11.3** 2549	**11.0** 2470	**10.8** 2422	**10.5** 2358
			30000	**27.0** 6067	**21.9** 4928	**17.8** 4002	**13.5** 3041	**11.0** 2470	**10.4** 2338	**9.7** 2187	**9.2** 2070	**8.8** 1977	**8.4** 1899	**8.2** 1833	**7.9** 1776	**7.7** 1742	**7.5** 1696
			40000	**24.8** 5565	**20.1** 4520	**16.3** 3672	**12.4** 2789	**10.1** 2265	**9.5** 2145	**8.9** 2006	**8.4** 1899	**8.1** 1813	**7.7** 1742	**7.5** 1682	**7.2** 1629	**7.1** 1598	**6.9** 1556
			60000	**21.9** 4928	**17.8** 4002	**14.5** 3251	**11.0** 2470	**8.9** 2006	**8.4** 1899	**7.9** 1776	**7.5** 1682	**7.1** 1606	**6.9** 1543	**6.6** 1489	**6.4** 1443	**6.3** 1415	**6.1** 1378
			100000	**18.8** 4227	**15.3** 3434	**12.4** 2789	**9.4** 2119	**7.7** 1721	**7.2** 1629	**6.8** 1524	**6.4** 1443	**6.1** 1378	**5.9** 1323	**5.7** 1278	**5.5** 1238	**5.4** 1214	**5.3** 1182
				50	100	200	500	1000	1200	1500	1800	2100	2400	2700	3000	3200	3500
40, 45 1 11/16, 1 ¾	22209	**109** 24500	10000	**39.3** 8831	**31.9** 7173	**25.9** 5827	**19.7** 4426	**16.0** 3595	**15.1** 3404	**14.2** 3183	**13.4** 3014	**12.8** 2878	**12.3** 2765	**11.9** 2669	**11.5** 2586	**11.3** 2536	**11.0** 2469
			30000	**28.3** 6352	**22.9** 5159	**18.6** 4191	**14.2** 3183	**11.5** 2586	**10.9** 2448	**10.2** 2290	**9.6** 2168	**9.2** 2070	**8.8** 1988	**8.5** 1919	**8.3** 1860	**8.1** 1824	**7.9** 1776
			40000	**25.9** 5827	**21.1** 4733	**17.1** 3844	**13.0** 2920	**10.6** 2372	**10.0** 2246	**9.3** 2100	**8.8** 1988	**8.4** 1899	**8.1** 1824	**7.8** 1761	**7.6** 1706	**7.4** 1673	**7.2** 1629
			60000	**22.9** 5159	**18.6** 4191	**15.1** 3404	**11.5** 2586	**9.3** 2100	**8.8** 1988	**8.3** 1860	**7.8** 1761	**7.5** 1681	**7.2** 1615	**6.9** 1559	**6.7** 1511	**6.6** 1482	**6.4** 1442
			100000	**19.7** 4426	**16.0** 3595	**13.0** 2920	**9.9** 2218	**8.0** 1802	**7.6** 1706	**7.1** 1595	**6.7** 1511	**6.4** 1442	**6.2** 1386	**6.0** 1338	**5.8** 1296	**5.7** 1271	**5.5** 1237
				50	100	200	500	1000	1200	1500	1800	2100	2400	2700	3000	3200	3500
50 1 15/16, 2	22210	**117** 26300	10000	**42.2** 9480	**34.3** 7700	**27.8** 6255	**21.1** 4751	**17.2** 3859	**16.3** 3654	**15.2** 3417	**14.4** 3235	**13.7** 3089	**13.2** 2968	**12.7** 2865	**12.3** 2776	**12.1** 2723	**11.8** 2650
			30000	**30.3** 6818	**24.6** 5538	**20.0** 4498	**15.2** 3417	**12.3** 2776	**11.7** 2628	**10.9** 2458	**10.4** 2327	**9.9** 2222	**9.5** 2135	**9.2** 2060	**8.9** 1996	**8.7** 1958	**8.5** 1906
			40000	**27.8** 6255	**22.6** 5080	**18.4** 4127	**13.9** 3135	**11.3** 2546	**10.7** 2411	**10.0** 2255	**9.5** 2135	**9.1** 2038	**8.7** 1958	**8.4** 1890	**8.1** 1831	**8.0** 1796	**7.8** 1749
			60000	**24.6** 5538	**20.0** 4498	**16.3** 3654	**12.3** 2776	**10.0** 2255	**9.5** 2135	**8.9** 1996	**8.4** 1890	**8.0** 1805	**7.7** 1734	**7.4** 1674	**7.2** 1622	**7.1** 1590	**6.9** 1548
			100000	**21.1** 4751	**17.2** 3859	**13.9** 3135	**10.6** 2381	**8.6** 1934	**8.1** 1831	**7.6** 1713	**7.2** 1622	**6.9** 1548	**6.6** 1487	**6.4** 1436	**6.2** 1391	**6.1** 1364	**5.9** 1328
				50	100	200	500	1000	1200	1500	1800	2100	2400	2700	3000	3200	3500[1]
55 2 3/16, 2 ¼	22211	**140** 31400	10000	**50.3** 11319	**40.9** 9194	**33.2** 7468	**25.2** 5673	**20.5** 4608	**19.4** 4362	**18.1** 4080	**17.2** 3863	**16.4** 3688	**15.8** 3543	**15.2** 3420	**14.7** 3314	**14.5** 3250	**14.1** 3164
			30000	**36.2** 8141	**29.4** 6612	**23.9** 5371	**18.1** 4080	**14.7** 3314	**14.0** 3138	**13.1** 2934	**12.4** 2778	**11.8** 2653	**11.3** 2549	**10.9** 2460	**10.6** 2383	**10.4** 2338	**10.1** 2276
			40000	**33.2** 7468	**27.0** 6066	**21.9** 4927	**16.6** 3743	**13.5** 3040	**12.8** 2878	**12.0** 2692	**11.3** 2549	**10.8** 2433	**10.4** 2338	**10.0** 2257	**9.7** 2186	**9.5** 2144	**9.3** 2088
			60000	**29.4** 6612	**23.9** 5371	**19.4** 4362	**14.7** 3314	**12.0** 2692	**11.3** 2549	**10.6** 2383	**10.0** 2257	**9.6** 2155	**9.2** 2070	**8.9** 1998	**8.6** 1936	**8.4** 1899	**8.2** 1849
			100000	**25.2** 5673	**20.5** 4608	**16.6** 3743	**12.6** 2843	**10.3** 2309	**9.7** 2186	**9.1** 2045	**8.6** 1936	**8.2** 1849	**7.9** 1776	**7.6** 1714	**7.4** 1661	**7.2** 1629	**7.1** 1586
				50	100	200	500	1000	1200	1500	1800	2100	2400	2700	3000[1]	3200[1]	3500[1]
60, 65 2 7/16, 2 ½	22213	**206** 46400	10000	**74.4** 16726	**60.4** 13585	**49.1** 11035	**37.3** 8383	**30.3** 6809	**28.7** 6446	**26.8** 6029	**25.4** 5708	**24.2** 5450	**23.3** 5236	**22.5** 5054	**21.8** 4897	**21.4** 4803	**20.8** 4676
			30000	**53.5** 12030	**43.5** 9771	**35.3** 7937	**26.8** 6029	**21.8** 4897	**20.6** 4636	**19.3** 4336	**18.3** 4105	**17.4** 3920	**16.8** 3766	**16.2** 3635	**15.7** 3522	**15.4** 3455	**15.0** 3363
			40000	**49.1** 11035	**39.9** 8963	**32.4** 7280	**24.6** 5531	**20.0** 4492	**18.9** 4253	**17.7** 3978	**16.8** 3766	**16.0** 3596	**15.4** 3455	**14.8** 3335	**14.4** 3231	**14.1** 3169	**13.7** 3085
			60000	**43.5** 9771	**35.3** 7937	**28.7** 6446	**21.8** 4897	**17.7** 3978	**16.8** 3766	**15.7** 3522	**14.8** 3335	**14.2** 3184	**13.6** 3059	**13.1** 2953	**12.7** 2861	**12.5** 2806	**12.2** 2732
			100000	**37.3** 8383	**30.3** 6809	**24.6** 5531	**18.7** 4201	**15.2** 3413	**14.4** 3231	**13.4** 3022	**12.7** 2861	**12.2** 2732	**11.7** 2624	**11.3** 2533	**10.9** 2454	**10.7** 2407	**10.4** 2343

[1]Speeds referenced here may be higher than speed rating for seals. Please refer to the charts on pages 57 – 59.

[2]For speeds greater than thermal reference speed, contact your Timken engineer.

Continued on next page.

LOAD RATINGS – *continued*

TABLE 26. CL SERIES – ALLOWABLE RADIAL LOAD (kN/LBS.) AT VARIOUS RPM[1] (CONTINUED)

Shaft Diameter	Bearing No.	C	L_{10} Life	Speed[2]												
mm in.		**kN** lbs.		RPM												
				50	100	200	500	1000	1200	1500	1800	2100	2400	2700[1]	3000[1]	3200[1]
70, 75 2 11/16, 2 3/4, 2 15/16, 3	22215	**220** 49900	10000	**80.0** 17987	**65.0** 14610	**52.8** 11867	**40.1** 9015	**32.6** 7322	**30.8** 6933	**28.8** 6484	**27.3** 6139	**26.1** 5861	**25.0** 5631	**24.2** 5436	**23.4** 5266	**23.0** 5166
			30000	**57.5** 12937	**46.7** 10508	**38.0** 8535	**28.8** 6484	**23.4** 5266	**22.2** 4986	**20.7** 4663	**19.6** 4415	**18.8** 4216	**18.0** 4050	**17.4** 3909	**16.8** 3788	**16.5** 3715
			40000	**52.8** 11867	**42.9** 9639	**34.8** 7829	**26.5** 5948	**21.5** 4831	**20.3** 4574	**19.0** 4278	**18.0** 4050	**17.2** 3867	**16.5** 3715	**16.0** 3586	**15.5** 3475	**15.2** 3408
			60000	**46.7** 10508	**38.0** 8535	**30.8** 6933	**23.4** 5266	**19.0** 4278	**18.0** 4050	**16.8** 3788	**16.0** 3586	**15.2** 3424	**14.6** 3290	**14.1** 3175	**13.7** 3077	**13.4** 3018
			100000	**40.1** 9015	**32.6** 7322	**26.5** 5948	**20.1** 4518	**16.3** 3670	**15.5** 3475	**14.5** 3250	**13.7** 3077	**13.1** 2938	**12.6** 2822	**12.1** 2724	**11.7** 2639	**11.5** 2589
				50	100	200	500	1000	1200	1500	1800	2100[1]	2400[1]	2700[1]		
80, 85, 90 3 3/16, 3 1/4, 3 7/16, 3 1/2	22218	**355** 79700	10000	**127.8** 28729	**103.8** 23335	**84.3** 18954	**64.0** 14399	**52.0** 11695	**49.3** 11073	**46.1** 10356	**43.6** 9805	**41.6** 9362	**40.0** 8994	**38.6** 8682		
			30000	**91.9** 20663	**74.7** 16783	**60.6** 13632	**46.1** 10356	**37.4** 8412	**35.4** 7964	**33.1** 7448	**31.4** 7052	**29.9** 6733	**28.8** 6469	**27.8** 6244		
			40000	**84.3** 18954	**68.5** 15396	**55.6** 12505	**42.3** 9500	**34.3** 7716	**32.5** 7305	**30.4** 6832	**28.8** 6469	**27.5** 6176	**26.4** 5934	**25.5** 5728		
			60000	**74.7** 16783	**60.6** 13632	**49.3** 11073	**37.4** 8412	**30.4** 6832	**28.8** 6469	**26.9** 6050	**25.5** 5728	**24.3** 5469	**23.4** 5254	**22.6** 5072		
			100000	**64.0** 14399	**52.0** 11695	**42.3** 9500	**32.1** 7216	**26.1** 5862	**24.7** 5550	**23.1** 5190	**21.9** 4914	**20.9** 4692	**20.1** 4508	**19.4** 4351		
				50	100	200	500	1000	1200	1500	1800[1]	2100[1]	2400[1]	2700[1]		
100 3 15/16, 4	22220	**435** 97700	10000	**156.7** 35218	**127.2** 28606	**103.4** 23235	**78.5** 17651	**63.8** 14337	**60.4** 13574	**56.5** 12695	**53.5** 12019	**51.0** 11476	**49.0** 11025	**47.3** 10642		
			30000	**112.7** 25329	**91.5** 20574	**74.3** 16711	**56.5** 12695	**45.9** 10311	**43.4** 9762	**40.6** 9130	**38.5** 8644	**36.7** 8254	**35.3** 7930	**34.0** 7654		
			40000	**103.4** 23235	**84.0** 18873	**68.2** 15329	**51.8** 11645	**42.1** 9459	**39.8** 8955	**37.3** 8375	**35.3** 7930	**33.7** 7571	**32.4** 7274	**31.2** 7021		
			60000	**91.5** 20574	**74.3** 16711	**60.4** 13574	**45.9** 10311	**37.3** 8375	**35.3** 7930	**33.0** 7416	**31.2** 7021	**29.8** 6704	**28.7** 6441	**27.7** 6217		
			100000	**78.5** 17651	**63.8** 14337	**51.8** 11645	**39.3** 8846	**32.0** 7185	**30.3** 6803	**28.3** 6362	**26.8** 6024	**25.6** 5752	**24.6** 5526	**23.7** 5334		
				50	100	200	500	1000	1200	1500[1]	1800[1]	2100[1]	2400[1]			
110, 115 4 7/16, 4 1/2	22222	**555** 125000	10000	**200.4** 45058	**162.8** 36599	**132.2** 29727	**100.5** 22583	**81.6** 18343	**77.3** 17367	**72.2** 16242	**68.4** 15377	**65.3** 14683	**62.7** 14106			
			30000	**144.2** 32407	**117.1** 26323	**95.1** 21381	**72.2** 16242	**58.7** 13193	**55.6** 12490	**52.0** 11682	**49.2** 11060	**47.0** 10560	**45.1** 10145			
			40000	**132.2** 29727	**107.4** 24146	**87.2** 19613	**66.3** 14899	**53.8** 12102	**51.0** 11458	**47.7** 10716	**45.1** 10145	**43.1** 9687	**41.4** 9306			
			60000	**117.1** 26323	**95.1** 21381	**77.3** 17367	**58.7** 13193	**47.7** 10716	**45.1** 10145	**42.2** 9488	**40.0** 8983	**38.2** 8577	**36.7** 8241			
			100000	**100.5** 22583	**81.6** 18343	**66.3** 14899	**50.3** 11318	**40.9** 9193	**38.7** 8704	**36.2** 8140	**34.3** 7707	**32.7** 7359	**31.4** 7070			
				50	100	200	500	1000	1200[1]	1500[1]	1800[1]	2100[1]				
125, 130 4 15/16, 5	22226	**757** 170000	10000	**272.6** 61279	**221.4** 49774	**179.8** 40429	**136.6** 30712	**111.0** 24946	**105.1** 23618	**98.3** 22089	**93.0** 20913	**88.8** 19968				
			30000	**196.1** 44074	**159.2** 35799	**129.3** 29078	**98.3** 22089	**79.8** 17942	**75.6** 16987	**70.7** 15887	**66.9** 15041	**63.9** 14362				
			40000	**179.8** 40429	**146.1** 32839	**118.6** 26673	**90.1** 20263	**73.2** 16458	**69.3** 15582	**64.8** 14573	**61.4** 13798	**58.6** 13174				
			60000	**159.2** 35799	**129.3** 29078	**105.1** 23618	**79.8** 17942	**64.8** 14573	**61.4** 13798	**57.4** 12904	**54.3** 12217	**51.9** 11665				
			100000	**136.6** 30712	**111.0** 24946	**90.1** 20263	**68.5** 15393	**55.6** 12503	**52.7** 11837	**49.2** 11071	**46.6** 10482	**44.5** 10008				

[1]Speeds referenced here may be higher than speed rating for seals. Please refer to the charts on pages 57 – 59.
[2]For speeds greater than thermal reference speed, contact your Timken engineer.

TABLE 27. EC SERIES – ALLOWABLE RADIAL LOAD (kN/LBS.) AT VARIOUS RPM[1]

Shaft Diameter	Bearing No.	C	L_{10} Life	Speed[2]													
mm in.		**kN** lbs.		RPM													
				50	100	200	500	1000	1200	1500	1800	2100	2400	2700	3000	3200	3500
35 1 7/16, 1 ½	22208	**104** 23400	10000	**37.5** 8435	**30.5** 6851	**24.8** 5565	**18.8** 4227	**15.3** 3434	**14.5** 3251	**13.5** 3041	**12.8** 2879	**12.2** 2749	**11.7** 2641	**11.3** 2549	**11.0** 2470	**10.8** 2422	**10.5** 2358
			30000	**27.0** 6067	**21.9** 4928	**17.8** 4002	**13.5** 3041	**11.0** 2470	**10.4** 2338	**9.7** 2187	**9.2** 2070	**8.8** 1977	**8.4** 1899	**8.2** 1833	**7.9** 1776	**7.7** 1742	**7.5** 1696
			40000	**24.8** 5565	**20.1** 4520	**16.3** 3672	**12.4** 2789	**10.1** 2265	**9.5** 2145	**8.9** 2006	**8.4** 1899	**8.1** 1813	**7.7** 1742	**7.5** 1682	**7.2** 1629	**7.1** 1598	**6.9** 1556
			60000	**21.9** 4928	**17.8** 4002	**14.5** 3251	**11.0** 2470	**8.9** 2006	**8.4** 1899	**7.9** 1776	**7.5** 1682	**7.1** 1606	**6.9** 1543	**6.6** 1489	**6.4** 1443	**6.3** 1415	**6.1** 1378
			100000	**18.8** 4227	**15.3** 3434	**12.4** 2789	**9.4** 2119	**7.7** 1721	**7.2** 1629	**6.8** 1524	**6.4** 1443	**6.1** 1378	**5.9** 1323	**5.7** 1278	**5.5** 1238	**5.4** 1214	**5.3** 1182
				50	100	200	500	1000	1200	1500	1800	2100	2400	2700	3000	3200	3500
40, 45 1 11/16, 1 ¾	22209	**109** 24500	10000	**39.3** 8831	**31.9** 7173	**25.9** 5827	**19.7** 4426	**16.0** 3595	**15.1** 3404	**14.2** 3183	**13.4** 3014	**12.8** 2878	**12.3** 2765	**11.9** 2669	**11.5** 2586	**11.3** 2536	**11.0** 2469
			30000	**28.3** 6352	**22.9** 5159	**18.6** 4191	**14.2** 3183	**11.5** 2586	**10.9** 2448	**10.2** 2290	**9.6** 2168	**9.2** 2070	**8.8** 1988	**8.5** 1919	**8.3** 1860	**8.1** 1824	**7.9** 1776
			40000	**25.9** 5827	**21.1** 4733	**17.1** 3844	**13.0** 2920	**10.6** 2372	**10.0** 2246	**9.3** 2100	**8.8** 1988	**8.4** 1899	**8.1** 1824	**7.8** 1761	**7.6** 1706	**7.4** 1673	**7.2** 1629
			60000	**22.9** 5159	**18.6** 4191	**15.1** 3404	**11.5** 2586	**9.3** 2100	**8.8** 1988	**8.3** 1860	**7.8** 1761	**7.5** 1681	**7.2** 1615	**6.9** 1559	**6.7** 1511	**6.6** 1482	**6.4** 1442
			100000	**19.7** 4426	**16.0** 3595	**13.0** 2920	**9.9** 2218	**8.0** 1802	**7.6** 1706	**7.1** 1595	**6.7** 1511	**6.4** 1442	**6.2** 1386	**6.0** 1338	**5.8** 1296	**5.7** 1271	**5.5** 1237
				50	100	200	500	1000	1200	1500	1800	2100	2400	2700	3000	3200	3500
50 1 15/16, 2	22210	**117** 26300	10000	**42.2** 9480	**34.3** 7700	**27.8** 6255	**21.1** 4751	**17.2** 3859	**16.3** 3654	**15.2** 3417	**14.4** 3235	**13.7** 3089	**13.2** 2968	**12.7** 2865	**12.3** 2776	**12.1** 2723	**11.8** 2650
			30000	**30.3** 6818	**24.6** 5538	**20.0** 4498	**15.2** 3417	**12.3** 2776	**11.7** 2628	**10.9** 2458	**10.4** 2327	**9.9** 2222	**9.5** 2135	**9.2** 2060	**8.9** 1996	**8.7** 1958	**8.5** 1906
			40000	**27.8** 6255	**22.6** 5080	**18.4** 4127	**13.9** 3135	**11.3** 2546	**10.7** 2411	**10.0** 2255	**9.5** 2135	**9.1** 2038	**8.7** 1958	**8.4** 1890	**8.1** 1831	**8.0** 1796	**7.8** 1749
			60000	**24.6** 5538	**20.0** 4498	**16.3** 3654	**12.3** 2776	**10.0** 2255	**9.5** 2135	**8.9** 1996	**8.4** 1890	**8.0** 1805	**7.7** 1734	**7.4** 1674	**7.2** 1622	**7.1** 1590	**6.9** 1548
			100000	**21.1** 4751	**17.2** 3859	**13.9** 3135	**10.6** 2381	**8.6** 1934	**8.1** 1831	**7.6** 1713	**7.2** 1622	**6.9** 1548	**6.6** 1487	**6.4** 1436	**6.2** 1391	**6.1** 1364	**5.9** 1328
				50	100	200	500	1000	1200	1500	1800	2100	2400	2700	3000	3200	3500[1]
55 2 3/16, 2 ¼	22211	**140** 31400	10000	**50.3** 11319	**40.9** 9194	**33.2** 7468	**25.2** 5673	**20.5** 4608	**19.4** 4362	**18.1** 4080	**17.2** 3863	**16.4** 3688	**15.8** 3543	**15.2** 3420	**14.7** 3314	**14.5** 3250	**14.1** 3164
			30000	**36.2** 8141	**29.4** 6612	**23.9** 5371	**18.1** 4080	**14.7** 3314	**14.0** 3138	**13.1** 2934	**12.4** 2778	**11.8** 2653	**11.3** 2549	**10.9** 2460	**10.6** 2383	**10.4** 2338	**10.1** 2276
			40000	**33.2** 7468	**27.0** 6066	**21.9** 4927	**16.6** 3743	**13.5** 3040	**12.8** 2878	**12.0** 2692	**11.3** 2549	**10.8** 2433	**10.4** 2338	**10.0** 2257	**9.7** 2186	**9.5** 2144	**9.3** 2088
			60000	**29.4** 6612	**23.9** 5371	**19.4** 4362	**14.7** 3314	**12.0** 2692	**11.3** 2549	**10.6** 2383	**10.0** 2257	**9.6** 2155	**9.2** 2070	**8.9** 1998	**8.6** 1936	**8.4** 1899	**8.2** 1849
			100000	**25.2** 5673	**20.5** 4608	**16.6** 3743	**12.6** 2843	**10.3** 2309	**9.7** 2186	**9.1** 2045	**8.6** 1936	**8.2** 1849	**7.9** 1776	**7.6** 1714	**7.4** 1661	**7.2** 1629	**7.1** 1586
				50	100	200	500	1000	1200	1500	1800	2100	2400	2700	3000[1]	3200[1]	3500[1]
60, 65 2 7/16, 2 ½	22213	**206** 46400	10000	**74.4** 16726	**60.4** 13585	**49.1** 11035	**37.3** 8383	**30.3** 6809	**28.7** 6446	**26.8** 6029	**25.4** 5708	**24.2** 5450	**23.3** 5236	**22.5** 5054	**21.8** 4897	**21.4** 4803	**20.8** 4676
			30000	**53.5** 12030	**43.5** 9771	**35.3** 7937	**26.8** 6029	**21.8** 4897	**20.6** 4636	**19.3** 4336	**18.3** 4105	**17.4** 3920	**16.8** 3766	**16.2** 3635	**15.7** 3522	**15.4** 3455	**15.0** 3363
			40000	**49.1** 11035	**39.9** 8963	**32.4** 7280	**24.6** 5531	**20.0** 4492	**18.9** 4253	**17.7** 3978	**16.8** 3766	**16.0** 3596	**15.4** 3455	**14.8** 3335	**14.4** 3231	**14.1** 3169	**13.7** 3085
			60000	**43.5** 9771	**35.3** 7937	**28.7** 6446	**21.8** 4897	**17.7** 3978	**16.8** 3766	**15.7** 3522	**14.8** 3335	**14.2** 3184	**13.6** 3059	**13.1** 2953	**12.7** 2861	**12.5** 2806	**12.2** 2732
			100000	**37.3** 8383	**30.3** 6809	**24.6** 5531	**18.7** 4201	**15.2** 3413	**14.4** 3231	**13.4** 3022	**12.7** 2861	**12.2** 2732	**11.7** 2624	**11.3** 2533	**10.9** 2454	**10.7** 2407	**10.4** 2343

Continued on next page.

[1]Speeds referenced here may be higher than speed rating for seals. Please refer to the charts on pages 57 – 59.
[2]For speeds greater than thermal reference speed, contact your Timken engineer.

LOAD RATINGS – *Continued from previous page*

TABLE 27. EC SERIES – ALLOWABLE RADIAL LOAD (kN/LBS.) AT VARIOUS RPM[1] (CONTINUED)

Shaft Diameter	Bearing No.	C	L_{10} Life	Speed[2]												
mm in.		**kN** lbs.		RPM												
				50	100	200	500	1000	1200	1500	1800	2100	2400	2700[1]	3000[1]	3200[1]
70, 75 2 11/16, 2 3/4, 2 15/16, 3	22215	**222** 49900	10000	**80.0** 17987	**65.0** 14610	**52.8** 11867	**40.1** 9015	**32.6** 7322	**30.8** 6933	**28.8** 6484	**27.3** 6139	**26.1** 5861	**25.0** 5631	**24.2** 5436	**23.4** 5266	**23.0** 5166
			30000	**57.5** 12937	**46.7** 10508	**38.0** 8535	**28.8** 6484	**23.4** 5266	**22.2** 4986	**20.7** 4663	**19.6** 4415	**18.8** 4216	**18.0** 4050	**17.4** 3909	**16.8** 3788	**16.5** 3715
			40000	**52.8** 11867	**42.9** 9639	**34.8** 7829	**26.5** 5948	**21.5** 4831	**20.3** 4574	**19.0** 4278	**18.0** 4050	**17.2** 3867	**16.5** 3715	**16.0** 3586	**15.5** 3475	**15.2** 3408
			60000	46.7 10508	38.0 8535	30.8 6933	23.4 5266	19.0 4278	18.0 4050	16.8 3788	16.0 3586	15.2 3424	14.6 3290	14.1 3175	13.7 3077	13.4 3018
			100000	**40.1** 9015	**32.6** 7322	**26.5** 5948	**20.1** 4518	**16.3** 3670	**15.5** 3475	**14.5** 3250	**13.7** 3077	**13.1** 2938	**12.6** 2822	**12.1** 2724	**11.7** 2639	**11.5** 2589
				50	100	200	500	1000	1200	1500	1800	2100[1]	2400[1]	2700[1]		
80, 85, 90 3 3/16, 3 1/4, 3 7/16, 3 1/2	22218	**355** 79700	10000	**127.8** 28729	**103.8** 23335	**84.3** 18954	**64.0** 14399	**52.0** 11695	**49.3** 11073	**46.1** 10356	**43.6** 9805	**41.6** 9362	**40.0** 8994	**38.6** 8682		
			30000	**91.9** 20663	**74.7** 16783	**60.6** 13632	**46.1** 10356	**37.4** 8412	**35.4** 7964	**33.1** 7448	**31.4** 7052	**29.9** 6733	**28.8** 6469	**27.8** 6244		
			40000	**84.3** 18954	**68.5** 15396	**55.6** 12505	**42.3** 9500	**34.3** 7716	**32.5** 7305	**30.4** 6832	**28.8** 6469	**27.5** 6176	**26.4** 5934	**25.5** 5728		
			60000	**74.7** 16783	**60.6** 13632	**49.3** 11073	**37.4** 8412	**30.4** 6832	**28.8** 6469	**26.9** 6050	**25.5** 5728	**24.3** 5469	**23.4** 5254	**22.6** 5072		
			100000	**64.0** 14399	**52.0** 11695	**42.3** 9500	**32.1** 7216	**26.1** 5862	**24.7** 5550	**23.1** 5190	**21.9** 4914	**20.9** 4692	**20.1** 4508	**19.4** 4351		
				50	100	200	500	1000	1200	1500	1800[1]	2100[1]	2400[1]	2700[1]		
100 3 11/16, 3 3/4, 3 15/16, 4	22220	**435** 97700	10000	**156.7** 35218	**127.2** 28606	**103.4** 23235	**78.5** 17651	**63.8** 14337	**60.4** 13574	**56.5** 12695	**53.5** 12019	**51.0** 11476	**49.0** 11025	**47.3** 10642		
			30000	**112.7** 25329	**91.5** 20574	**74.3** 16711	**56.5** 12695	**45.9** 10311	**43.4** 9762	**40.6** 9130	**38.5** 8644	**36.7** 8254	**35.3** 7930	**34.0** 7654		
			40000	**103.4** 23235	**84.0** 18873	**68.2** 15329	**51.8** 11645	**42.1** 9459	**39.8** 8955	**37.3** 8375	**35.3** 7930	**33.7** 7571	**32.4** 7274	**31.2** 7021		
			60000	**91.5** 20574	**74.3** 16711	**60.4** 13574	**45.9** 10311	**37.3** 8375	**35.3** 7930	**33.0** 7416	**31.2** 7021	**29.8** 6704	**28.7** 6441	**27.7** 6217		
			100000	**78.5** 17651	**63.8** 14337	**51.8** 11645	**39.3** 8846	**32.0** 7185	**30.3** 6803	**28.3** 6362	**26.8** 6024	**25.6** 5752	**24.6** 5526	**23.7** 5334		
				50	100	200	500	1000	1200	1500[1]	1800[1]	2100[1]	2400[1]			
110, 115 4 7/16, 4 1/2	22222	**555** 125000	10000	**200.4** 45058	**162.8** 36599	**132.2** 29727	**100.5** 22583	**81.6** 18343	**77.3** 17367	**72.2** 16242	**68.4** 15377	**65.3** 14683	**62.7** 14106			
			30000	**144.2** 32407	**117.1** 26323	**95.1** 21381	**72.2** 16242	**58.7** 13193	**55.6** 12490	**52.0** 11682	**49.2** 11060	**47.0** 10560	**45.1** 10145			
			40000	**132.2** 29727	**107.4** 24146	**87.2** 19613	**66.3** 14899	**53.8** 12102	**51.0** 11458	**47.7** 10716	**45.1** 10145	**43.1** 9687	**41.4** 9306			
			60000	**117.1** 26323	**95.1** 21381	**77.3** 17367	**58.7** 13193	**47.7** 10716	**45.1** 10145	**42.2** 9488	**40.0** 8983	**38.2** 8577	**36.7** 8241			
			100000	**100.5** 22583	**81.6** 18343	**66.3** 14899	**50.3** 11318	**40.9** 9193	**38.7** 8704	**36.2** 8140	**34.3** 7707	**32.7** 7359	**31.4** 7070			
				50	100	200	500	1000	1200[1]	1500[1]	1800[1]	2100[1]				
125, 130 4 15/16, 5	22226	**757** 170000	10000	**272.6** 61279	**221.4** 49774	**179.8** 40429	**136.6** 30712	**111.0** 24946	**105.1** 23618	**98.3** 22089	**93.0** 20913	**88.8** 19968				
			30000	**196.1** 44074	**159.2** 35799	**129.3** 29078	**98.3** 22089	**79.8** 17942	**75.6** 16987	**70.7** 15887	**66.9** 15041	**63.9** 14362				
			40000	**179.8** 40429	**146.1** 32839	**118.6** 26673	**90.1** 20263	**73.2** 16458	**69.3** 15582	**64.8** 14573	**61.4** 13798	**58.6** 13174				
			60000	**159.2** 35799	**129.3** 29078	**105.1** 23618	**79.8** 17942	**64.8** 14573	**61.4** 13798	**57.4** 12904	**54.3** 12217	**51.9** 11665				
			100000	**136.6** 30712	**111.0** 24946	**90.1** 20263	**68.5** 15393	**55.6** 12503	**52.7** 11837	**49.2** 11071	**46.6** 10482	**44.5** 10008				

[1]Speeds referenced here may be higher than speed rating for seals. Please refer to the charts on pages 57 – 59.
[2]For speeds greater than thermal reference speed, contact your Timken engineer.

Continued on next page.

Continued from previous page.

Shaft Diameter	Bearing No.	C	L_{10} Life	Speed[2]					
mm in.		**kN** lbs.		RPM					
				50	100	200	500	1000[1]	1200[1]
140, 150 5 7⁄16, 5 ½, 5 15⁄16, 6	23230	**1270** 286000	10000	**458.6** 103094	**372.5** 83738	**302.6** 68016	**229.8** 51669	**186.7** 41968	**176.8** 39735
			30000	**329.8** 74147	**267.9** 60226	**217.6** 48919	**165.3** 37162	**134.3** 30185	**127.1** 28578
			40000	**302.6** 68016	**245.8** 55247	**199.6** 44874	**151.6** 34089	**123.2** 27689	**116.6** 26215
			60000	**267.9** 60226	**217.6** 48919	**176.8** 39735	**134.3** 30185	**109.1** 24518	**103.3** 23213
			100000	**229.8** 51669	**186.7** 41968	**151.6** 34089	**115.2** 25896	**93.6** 21034	**88.6** 19914
				50	100	200	500	1000[1]	
170, 180 6 7⁄16, 6 ½, 6 15⁄16, 7	23234	**1660** 373000	10000	**598.1** 134454	**485.8** 109211	**394.6** 88707	**299.8** 67387	**243.5** 54735	
			30000	**430.2** 96703	**349.4** 78547	**283.8** 63800	**215.6** 48466	**175.1** 39367	
			40000	**394.6** 88707	**320.5** 72052	**260.3** 58525	**197.8** 44459	**160.6** 36112	
			60000	**349.4** 78547	**283.8** 63800	**230.5** 51822	**175.1** 39367	**142.2** 31976	
			100000	**299.8** 67387	**243.5** 54735	**197.8** 44459	**150.2** 33773	**122.0** 27433	

[1]Speeds referenced here may be higher than speed rating for seals. Please refer to the charts on pages 57 – 59.
[2]For speeds greater than thermal reference speed, contact your Timken engineer.

LOAD RATINGS – *continued*

TABLE 28. TA - ALLOWABLE RADIAL LOAD (kN/LBS.) AT VARIOUS RPM[1]. (CONTINUED)

Shaft Diameter	Bearing No.	C	L_{10} Life	Speed[2]													
mm in.		**kN** lbs.		RPM													
				50	100	200	500	1000	1200	1500	1800	2100	2400	2700	3000	3200	3500
40 1 7⁄16, 1 ½	22209	**109** 24500	10000	**39.3** 8831	**31.9** 7173	**25.9** 5827	**19.7** 4426	**16.0** 3595	**15.1** 3404	**14.2** 3183	**13.4** 3014	**12.8** 2878	**12.3** 2765	**11.9** 2669	**11.5** 2586	**11.3** 2536	**11.0** 2469
			30000	**28.3** 6352	**22.9** 5159	**18.6** 4191	**14.2** 3183	**11.5** 2586	**10.9** 2448	**10.2** 2290	**9.6** 2168	**9.2** 2070	**8.8** 1988	**8.5** 1919	**8.3** 1860	**8.1** 1824	**7.9** 1776
			40000	**25.9** 5827	**21.1** 4733	**17.1** 3844	**13.0** 2920	**10.6** 2372	**10.0** 2246	**9.3** 2100	**8.8** 1988	**8.4** 1899	**8.1** 1824	**7.8** 1761	**7.6** 1706	**7.4** 1673	**7.2** 1629
			60000	**22.9** 5159	**18.6** 4191	**15.1** 3404	**11.5** 2586	**9.3** 2100	**8.8** 1988	**8.3** 1860	**7.8** 1761	**7.5** 1681	**7.2** 1615	**6.9** 1559	**6.7** 1511	**6.6** 1482	**6.4** 1442
			100000	**19.7** 4426	**16.0** 3595	**13.0** 2920	**9.9** 2218	**8.0** 1802	**7.6** 1706	**7.1** 1595	**6.7** 1511	**6.4** 1442	**6.2** 1386	**6.0** 1338	**5.8** 1296	**5.7** 1271	**5.5** 1237
				50	100	200	500	1000	1200	1500	1800	2100	2400	2700	3000	3200	3500
45 1 11⁄16, 1 ¾	22210	**117** 26300	10000	**42.2** 9480	**34.3** 7700	**27.8** 6255	**21.1** 4751	**17.2** 3859	**16.3** 3654	**15.2** 3417	**14.4** 3235	**13.7** 3089	**13.2** 2968	**12.7** 2865	**12.3** 2776	**12.1** 2723	**11.8** 2650
			30000	**30.3** 6818	**24.6** 5538	**20.0** 4498	**15.2** 3417	**12.3** 2776	**11.7** 2628	**10.9** 2458	**10.4** 2327	**9.9** 2222	**9.5** 2135	**9.2** 2060	**8.9** 1996	**8.7** 1958	**8.5** 1906
			40000	**27.8** 6255	**22.6** 5080	**18.4** 4127	**13.9** 3135	**11.3** 2546	**10.7** 2411	**10.0** 2255	**9.5** 2135	**9.1** 2038	**8.7** 1958	**8.4** 1890	**8.1** 1831	**8.0** 1796	**7.8** 1749
			60000	**24.6** 5538	**20.0** 4498	**16.3** 3654	**12.3** 2776	**10.0** 2255	**9.5** 2135	**8.9** 1996	**8.4** 1890	**8.0** 1805	**7.7** 1734	**7.4** 1674	**7.2** 1622	**7.1** 1590	**6.9** 1548
			100000	**21.1** 4751	**17.2** 3859	**13.9** 3135	**10.6** 2381	**8.6** 1934	**8.1** 1831	**7.6** 1713	**7.2** 1622	**6.9** 1548	**6.6** 1487	**6.4** 1436	**6.2** 1391	**6.1** 1364	**5.9** 1328
				50	100	200	500	1000	1200	1500	1800	2100	2400	2700	3000	3200	3500[1]
50 1 15⁄16, 2	22211	**140** 31400	10000	**50.3** 11319	**40.9** 9194	**33.2** 7468	**25.2** 5673	**20.5** 4608	**19.4** 4362	**18.1** 4080	**17.2** 3863	**16.4** 3688	**15.8** 3543	**15.2** 3420	**14.7** 3314	**14.5** 3250	**14.1** 3164
			30000	**36.2** 8141	**29.4** 6612	**23.9** 5371	**18.1** 4080	**14.7** 3314	**14.0** 3138	**13.1** 2934	**12.4** 2778	**11.8** 2653	**11.3** 2549	**10.9** 2460	**10.6** 2383	**10.4** 2338	**10.1** 2276
			40000	**33.2** 7468	**27.0** 6066	**21.9** 4927	**16.6** 3743	**13.5** 3040	**12.8** 2878	**12.0** 2692	**11.3** 2549	**10.8** 2433	**10.4** 2338	**10.0** 2257	**9.7** 2186	**9.5** 2144	**9.3** 2088
			60000	**29.4** 6612	**23.9** 5371	**19.4** 4362	**14.7** 3314	**12.0** 2692	**11.3** 2549	**10.6** 2383	**10.0** 2257	**9.6** 2155	**9.2** 2070	**8.9** 1998	**8.6** 1936	**8.4** 1899	**8.2** 1849
			100000	**25.2** 5673	**20.5** 4608	**16.6** 3743	**12.6** 2843	**10.3** 2309	**9.7** 2186	**9.1** 2045	**8.6** 1936	**8.2** 1849	**7.9** 1776	**7.6** 1714	**7.4** 1661	**7.2** 1629	**7.1** 1586
				50	100	200	500	1000	1200	1500	1800	2100	2400	2700	3000	3200[1]	3500[1]
55 –	22212	**169** 38100	10000	**61.1** 13734	**49.6** 11155	**40.3** 9061	**30.6** 6883	**24.9** 5591	**23.5** 5293	**22.0** 4951	**20.8** 4687	**19.9** 4475	**19.1** 4300	**18.5** 4150	**17.9** 4021	**17.5** 3944	**17.1** 3839
			30000	**43.9** 9878	**35.7** 8023	**29.0** 6517	**22.0** 4951	**17.9** 4021	**16.9** 3807	**15.8** 3561	**15.0** 3371	**14.3** 3219	**13.8** 3092	**13.3** 2985	**12.9** 2892	**12.6** 2837	**12.3** 2761
			40000	**40.3** 9061	**32.7** 7360	**26.6** 5978	**20.2** 4541	**16.4** 3689	**15.5** 3492	**14.5** 3266	**13.8** 3092	**13.1** 2953	**12.6** 2837	**12.2** 2738	**11.8** 2653	**11.6** 2602	**11.3** 2533
			60000	**35.7** 8023	**29.0** 6517	**23.5** 5293	**17.9** 4021	**14.5** 3266	**13.8** 3092	**12.9** 2892	**12.2** 2738	**11.6** 2614	**11.2** 2512	**10.8** 2425	**10.4** 2349	**10.2** 2304	**10.0** 2243
			100000	**30.6** 6883	**24.9** 5591	**20.2** 4541	**15.3** 3450	**12.5** 2802	**11.8** 2653	**11.0** 2481	**10.4** 2349	**10.0** 2243	**9.6** 2155	**9.3** 2080	**9.0** 2015	**8.8** 1977	**8.6** 1924
				50	100	200	500	1000	1200	1500	1800	2100	2400	2700	3000[1]	3200[1]	3500[1]
60 2 3⁄16, 2 ¼	22213	**206** 46400	10000	**74.4** 16726	**60.4** 13585	**49.1** 11035	**37.3** 8383	**30.3** 6809	**28.7** 6446	**26.8** 6029	**25.4** 5708	**24.2** 5450	**23.3** 5236	**22.5** 5054	**21.8** 4897	**21.4** 4803	**20.8** 4676
			30000	**53.5** 12030	**43.5** 9771	**35.3** 7937	**26.8** 6029	**21.8** 4897	**20.6** 4636	**19.3** 4336	**18.3** 4105	**17.4** 3920	**16.8** 3766	**16.2** 3635	**15.7** 3522	**15.4** 3455	**15.0** 3363
			40000	**49.1** 11035	**39.9** 8963	**32.4** 7280	**24.6** 5531	**20.0** 4492	**18.9** 4253	**17.7** 3978	**16.8** 3766	**16.0** 3596	**15.4** 3455	**14.8** 3335	**14.4** 3231	**14.1** 3169	**13.7** 3085
			60000	**43.5** 9771	**35.3** 7937	**28.7** 6446	**21.8** 4897	**17.7** 3978	**16.8** 3766	**15.7** 3522	**14.8** 3335	**14.2** 3184	**13.6** 3059	**13.1** 2953	**12.7** 2861	**12.5** 2806	**12.2** 2732
			100000	**37.3** 8383	**30.3** 6809	**24.6** 5531	**18.7** 4201	**15.2** 3413	**14.4** 3231	**13.4** 3022	**12.7** 2861	**12.2** 2732	**11.7** 2624	**11.3** 2533	**10.9** 2454	**10.7** 2407	**10.4** 2343

[1]Speeds referenced here may be higher than speed rating for seals. Please refer to the charts on pages 57 – 59.
[2]For speeds greater than thermal reference speed, contact your Timken engineer.

Continued on next page.

Continued from previous page.

Shaft Diameter	Bearing No.	C	L_{10} Life	Speed[2]											
mm in.		**kN** lbs.		RPM											
				50	100	200	500	1000	1200	1500	1800	2100	2400	2700[1]	3000[1]	3200[1]
65 2 7⁄16, 2 ½	22215	**222** 49900	10000	**80.0** 17987	**65.0** 14610	**52.8** 11867	**40.1** 9015	**32.6** 7322	**30.8** 6933	**28.8** 6484	**27.3** 6139	**26.1** 5861	**25.0** 5631	**24.2** 5436	**23.4** 5266	**23.0** 5166
			30000	**57.5** 12937	**46.7** 10508	**38.0** 8535	**28.8** 6484	**23.4** 5266	**22.2** 4986	**20.7** 4663	**19.6** 4415	**18.8** 4216	**18.0** 4050	**17.4** 3909	**16.8** 3788	**16.5** 3715
			40000	**52.8** 11867	**42.9** 9639	**34.8** 7829	**26.5** 5948	**21.5** 4831	**20.3** 4574	**19.0** 4278	**18.0** 4050	**17.2** 3867	**16.5** 3715	**16.0** 3586	**15.5** 3475	**15.2** 3408
			60000	**46.7** 10508	**38.0** 8535	**30.8** 6933	**23.4** 5266	**19.0** 4278	**18.0** 4050	**16.8** 3788	**16.0** 3586	**15.2** 3424	**14.6** 3290	**14.1** 3175	**13.7** 3077	**13.4** 3018
			100000	**40.1** 9015	**32.6** 7322	**26.5** 5948	**20.1** 4518	**16.3** 3670	**15.5** 3475	**14.5** 3250	**13.7** 3077	**13.1** 2938	**12.6** 2822	**12.1** 2724	**11.7** 2639	**11.5** 2589
				50	100	200	500	1000	1200	1500	1800	2100	2400[1]	2700[1]	3000[1]	
70 2 11⁄16, 2 ¾	22216	**254** 57200	10000	**91.7** 20619	**74.5** 16748	**60.5** 13603	**46.0** 10334	**37.3** 8394	**35.4** 7947	**33.1** 7432	**31.3** 7037	**29.9** 6719	**28.7** 6455	**27.7** 6231	**26.9** 6037	
			30000	**66.0** 14829	**53.6** 12045	**43.5** 9784	**33.1** 7432	**26.9** 6037	**25.4** 5716	**23.8** 5346	**22.5** 5061	**21.5** 4832	**20.7** 4643	**19.9** 4481	**19.3** 4342	
			40000	**60.5** 13603	**49.1** 11049	**39.9** 8975	**30.3** 6818	**24.6** 5538	**23.3** 5243	**21.8** 4904	**20.7** 4643	**19.7** 4433	**18.9** 4259	**18.3** 4111	**17.7** 3983	
			60000	**53.6** 12045	**43.5** 9784	**35.4** 7947	**26.9** 6037	**21.8** 4904	**20.7** 4643	**19.3** 4342	**18.3** 4111	**17.5** 3925	**16.8** 3771	**16.2** 3640	**15.7** 3527	
			100000	**46.0** 10334	**37.3** 8394	**30.3** 6818	**23.0** 5179	**18.7** 4207	**17.7** 3983	**16.6** 3725	**15.7** 3527	**15.0** 3367	**14.4** 3235	**13.9** 3123	**13.5** 3026	
				50	100	200	500	1000	1200	1500	1800	2100[1]	2400[1]	2700[1]		
75 2 15⁄16, 3	22217	**297** 66900	10000	**107.3** 24115	**87.1** 19588	**70.8** 15910	**53.8** 12086	**43.7** 9817	**41.3** 9295	**38.7** 8693	**36.6** 8230	**35.0** 7858	**33.6** 7550	**32.4** 7287		
			30000	**77.1** 17344	**62.7** 14088	**50.9** 11443	**38.7** 8693	**31.4** 7061	**29.7** 6685	**27.8** 6252	**26.3** 5919	**25.1** 5652	**24.2** 5430	**23.3** 5241		
			40000	**70.8** 15910	**57.5** 12923	**46.7** 10497	**35.5** 7974	**28.8** 6477	**27.3** 6132	**25.5** 5735	**24.2** 5430	**23.1** 5184	**22.2** 4981	**21.4** 4808		
			60000	**62.7** 14088	**50.9** 11443	**41.3** 9295	**31.4** 7061	**25.5** 5735	**24.2** 5430	**22.6** 5078	**21.4** 4808	**20.4** 4591	**19.6** 4410	**18.9** 4257		
			100000	**53.8** 12086	**43.7** 9817	**35.5** 7974	**26.9** 6057	**21.9** 4920	**20.7** 4658	**19.4** 4357	**18.3** 4125	**17.5** 3938	**16.8** 3784	**16.2** 3652		
				50	100	200	500	1000	1200	1500	1800	2100[1]	2400[1]	2700[1]		
80 3 3⁄16, 3 ¼	22218	**355** 79700	10000	**127.8** 28729	**103.8** 23335	**84.3** 18954	**64.0** 14399	**52.0** 11695	**49.3** 11073	**46.1** 10356	**43.6** 9805	**41.6** 9362	**40.0** 8994	**38.6** 8682		
			30000	**91.9** 20663	**74.7** 16783	**60.6** 13632	**46.1** 10356	**37.4** 8412	**35.4** 7964	**33.1** 7448	**31.4** 7052	**29.9** 6733	**28.8** 6469	**27.8** 6244		
			40000	**84.3** 18954	**68.5** 15396	**55.6** 12505	**42.3** 9500	**34.3** 7716	**32.5** 7305	**30.4** 6832	**28.8** 6469	**27.5** 6176	**26.4** 5934	**25.5** 5728		
			60000	**74.7** 16783	**60.6** 13632	**49.3** 11073	**37.4** 8412	**30.4** 6832	**28.8** 6469	**26.9** 6050	**25.5** 5728	**24.3** 5469	**23.4** 5254	**22.6** 5072		
			100000	**64.0** 14399	**52.0** 11695	**42.3** 9500	**32.1** 7216	**26.1** 5862	**24.7** 5550	**23.1** 5190	**21.9** 4914	**20.9** 4692	**20.1** 4508	**19.4** 4351		
				50	100	200	500	1000	1200	1500	1800	2100[1]	2400[1]	2700[1]		
85 –	22219	**385** 86600	10000	**138.9** 31216	**112.8** 25356	**91.6** 20595	**69.6** 15645	**56.5** 12708	**53.5** 12032	**50.1** 11252	**47.4** 10654	**45.2** 10172	**43.5** 9773	**42.0** 9433		
			30000	**99.9** 22452	**81.1** 18236	**65.9** 14813	**50.1** 11252	**40.7** 9140	**38.5** 8653	**36.0** 8093	**34.1** 7662	**32.5** 7316	**31.3** 7029	**30.2** 6785		
			40000	**91.6** 20595	**74.4** 16729	**60.4** 13588	**45.9** 10322	**37.3** 8384	**35.3** 7938	**33.0** 7424	**31.3** 7029	**29.9** 6711	**28.7** 6448	**27.7** 6224		
			60000	**81.1** 18236	**65.9** 14813	**53.5** 12032	**40.7** 9140	**33.0** 7424	**31.3** 7029	**29.2** 6574	**27.7** 6224	**26.4** 5942	**25.4** 5709	**24.5** 5511		
			100000	**69.6** 15645	**56.5** 12708	**45.9** 10322	**34.9** 7841	**28.3** 6369	**26.8** 6030	**25.1** 5640	**23.7** 5339	**22.7** 5098	**21.8** 4898	**21.0** 4728		

[1]Speeds referenced here may be higher than speed rating for seals. Please refer to the charts on pages 57 – 59.
[2]For speeds greater than thermal reference speed, contact your Timken engineer.

Continued on next page.

LOAD RATINGS – *continued*

TABLE 28. TA - ALLOWABLE RADIAL LOAD (kN/LBS.) AT VARIOUS RPM[1] (CONTINUED)

Shaft Diameter	Bearing No.	C	L_{10} Life	Speed[2]										
mm in.		**kN** lbs.		RPM										
				50	100	200	500	1000	1200	1500	1800[1]	2100[1]	2400[1]	2700[1]
90 3 7⁄16, 3 ½	22220	**435** 97700	10000	**156.7** 35218	**127.2** 28606	**103.4** 23235	**78.5** 17651	**63.8** 14337	**60.4** 13574	**56.5** 12695	**53.5** 12019	**51.0** 11476	**49.0** 11025	**47.3** 10642
			30000	**112.7** 25329	**91.5** 20574	**74.3** 16711	**56.5** 12695	**45.9** 10311	**43.4** 9762	**40.6** 9130	**38.5** 8644	**36.7** 8254	**35.3** 7930	**34.0** 7654
			40000	**103.4** 23235	**84.0** 18873	**68.2** 15329	**51.8** 11645	**42.1** 9459	**39.8** 8955	**37.3** 8375	**35.3** 7930	**33.7** 7571	**32.4** 7274	**31.2** 7021
			60000	**91.5** 20574	**74.3** 16711	**60.4** 13574	**45.9** 10311	**37.3** 8375	**35.3** 7930	**33.0** 7416	**31.2** 7021	**29.8** 6704	**28.7** 6441	**27.7** 6217
			100000	**78.5** 17651	**63.8** 14337	**51.8** 11645	**39.3** 8846	**32.0** 7185	**30.3** 6803	**28.3** 6362	**26.8** 6024	**25.6** 5752	**24.6** 5526	**23.7** 5334
				50	100	200	500	1000	1200	1500[1]	1800[1]	2100[1]	2400[1]	
100 3 15⁄16, 4	22222	**555** 125000	10000	**200.4** 45058	**162.8** 36599	**132.2** 29727	**100.5** 22583	**81.6** 18343	**77.3** 17367	**72.2** 16242	**68.4** 15377	**65.3** 14683	**62.7** 14106	
			30000	**144.2** 32407	**117.1** 26323	**95.1** 21381	**72.2** 16242	**58.7** 13193	**55.6** 12490	**52.0** 11682	**49.2** 11060	**47.0** 10560	**45.1** 10145	
			40000	**132.2** 29727	**107.4** 24146	**87.2** 19613	**66.3** 14899	**53.8** 12102	**51.0** 11458	**47.7** 10716	**45.1** 10145	**43.1** 9687	**41.4** 9306	
			60000	**117.1** 26323	**95.1** 21381	**77.3** 17367	**58.7** 13193	**47.7** 10716	**45.1** 10145	**42.2** 9488	**40.0** 8983	**38.2** 8577	**36.7** 8241	
			100000	**100.5** 22583	**81.6** 18343	**66.3** 14899	**50.3** 11318	**40.9** 9193	**38.7** 8704	**36.2** 8140	**34.3** 7707	**32.7** 7359	**31.4** 7070	
				50	100	200	500	1000	1200	1500[1]	1800[1]	2100[1]	2400[1]	
110 4 3⁄16, 4 ¼	22224	**647** 145000	10000	**232.5** 52268	**188.8** 42455	**153.4** 34484	**116.5** 26196	**94.6** 21278	**89.6** 20145	**83.8** 18841	**79.3** 17838	**75.8** 17032	**72.8** 16363	
			30000	**167.2** 37592	**135.8** 30534	**110.3** 24802	**83.8** 18841	**68.1** 15303	**64.5** 14489	**60.3** 13551	**57.1** 12829	**54.5** 12250	**52.4** 11769	
			40000	**153.4** 34484	**124.6** 28010	**101.2** 22751	**76.9** 17283	**62.4** 14038	**59.1** 13291	**55.3** 12430	**52.4** 11769	**50.0** 11237	**48.0** 10796	
			60000	**135.8** 30534	**110.3** 24802	**89.6** 20145	**68.1** 15303	**55.3** 12430	**52.4** 11769	**49.0** 11007	**46.4** 10421	**44.3** 9950	**42.5** 9559	
			100000	**116.5** 26196	**94.6** 21278	**76.9** 17283	**58.4** 13129	**47.4** 10664	**44.9** 10097	**42.0** 9443	**39.8** 8940	**38.0** 8536	**36.5** 8201	
				50	100	200	500	1000	1200[1]	1500[1]	1800[1]	2100[1]		
115 4 7⁄16, 4 ½	22226	**757** 170000	10000	**272.6** 61279	**221.4** 49774	**179.8** 40429	**136.6** 30712	**111.0** 24946	**105.1** 23618	**98.3** 22089	**93.0** 20913	**88.8** 19968		
			30000	**196.1** 44074	**159.2** 35799	**129.3** 29078	**98.3** 22089	**79.8** 17942	**75.6** 16987	**70.7** 15887	**66.9** 15041	**63.9** 14362		
			40000	**179.8** 40429	**146.1** 32839	**118.6** 26673	**90.1** 20263	**73.2** 16458	**69.3** 15582	**64.8** 14573	**61.4** 13798	**58.6** 13174		
			60000	**159.2** 35799	**129.3** 29078	**105.1** 23618	**79.8** 17942	**64.8** 14573	**61.4** 13798	**57.4** 12904	**54.3** 12217	**51.9** 11665		
			100000	**136.6** 30712	**111.0** 24946	**90.1** 20263	**68.5** 15393	**55.6** 12503	**52.7** 11837	**49.2** 11071	**46.6** 10482	**44.5** 10008		
				50	100	200	500	1000[1]	1200[1]	1500[1]	1800[1]			
125 4 15⁄16, 5	22228	**863** 194000	10000	**311.1** 69931	**252.7** 56801	**205.2** 46137	**155.9** 35048	**126.6** 28468	**119.9** 26953	**112.1** 25208	**106.2** 23866			
			30000	**223.7** 50296	**181.7** 40853	**147.6** 33183	**112.1** 25208	**91.1** 20475	**86.2** 19385	**80.6** 18130	**76.4** 17165			
			40000	**205.2** 46137	**166.7** 37475	**135.4** 30439	**102.9** 23123	**83.5** 18782	**79.1** 17782	**74.0** 16631	**70.0** 15746			
			60000	**181.7** 40853	**147.6** 33183	**119.9** 26953	**91.1** 20475	**74.0** 16631	**70.0** 15746	**65.5** 14726	**62.0** 13942			
			100000	**155.9** 35048	**126.6** 28468	**102.9** 23123	**78.1** 17566	**63.5** 14268	**60.1** 13508	**56.2** 12634	**53.2** 11961			

[1]Speeds referenced here may be higher than speed rating for seals. Please refer to the charts on pages 57 – 59.
[2]For speeds greater than thermal reference speed, contact your Timken engineer.

Continued on next page.

Continued from previous page.

Shaft Diameter	Bearing No.	C	L_{10} Life	Speed[2]						
mm in.		**kN** lbs.		RPM						
				50.0	100.0	200.0	500.0	1000.0	1200.0	1500.0
135 5 3⁄16, 5 1⁄4	23130	**1000** 225000	10000	**360.8** 81105.0	**293.0** 65878.0	**238.0** 53509.0	**180.8** 40649.0	**146.9** 33017.0	**139.0** 31260.0	**130.0** 29236.0
			30000	**259.5** 58333.0	**210.8** 47381.0	**171.2** 38485.0	**130.0** 29236.0	**105.6** 23747.0	**100.0** 22483.0	**93.5** 21027.0
			40000	**238.0** 53509.0	**193.3** 43463.0	**157.0** 35303.0	**119.3** 26818.0	**96.9** 21783.0	**91.7** 20624.0	**85.8** 19288.0
			60000	**210.8** 47381.0	**171.2** 38485.0	**139.0** 31260.0	**105.6** 23747.0	**85.8** 19288.0	**81.2** 18262.0	**76.0** 17079.0
			100000	**180.8** 40649.0	**146.9** 33017.0	**119.3** 26818.0	**90.6** 20373.0	**73.6** 16548.0	**69.7** 15667.0	**65.2** 14652.0
				50.0	100.0	200.0	500.0	1000.0	1200.0	1500.0
140 5 3⁄8, 5 7⁄16, 5 1⁄2	23132	**1160** 261000	10000	**418.1** 94072.4	**339.6** 76409.0	**275.8** 62061.1	**209.5** 47144.6	**170.2** 38292.6	**161.1** 36254.1	**150.7** 33906.4
			30000	**300.7** 67656.8	**244.2** 54953.3	**198.4** 44635.0	**150.7** 33906.4	**122.4** 27540.0	**115.9** 26074.0	**108.4** 24385.5
			40000	**275.8** 62061.1	**224.0** 50409.0	**182.0** 40944.0	**138.2** 31102.6	**112.3** 25262.6	**106.3** 23917.8	**99.4** 22369.0
			60000	**244.2** 54953.3	**198.4** 44635.0	**161.1** 36254.1	**122.4** 27540.0	**99.4** 22369.0	**94.1** 21178.2	**88.0** 19806.7
			100000	**209.5** 47144.6	**170.2** 38292.6	**138.2** 31102.6	**105.0** 23626.7	**85.3** 19190.4	**80.8** 18168.9	**75.5** 16992.3
				50.0	100.0	200.0	500.0	1000.0	1200.0	
150 5 13⁄16, 5 7⁄8, 5 15⁄16, 6	23134	**1220** 274000	10000	**439.7** 98758.0	**357.2** 80214.8	**290.1** 65153.3	**220.4** 49492.9	**179.0** 40199.9	**169.5** 38059.9	
			30000	**316.3** 71026.7	**256.9** 57690.4	**208.6** 46858.2	**158.5** 35595.2	**128.7** 28911.7	**121.9** 27372.7	
			40000	**290.1** 65153.3	**235.6** 52919.8	**191.4** 42983.4	**145.4** 32651.7	**118.1** 26520.9	**111.8** 25109.1	
			60000	**256.9** 57690.4	**208.6** 46858.2	**169.5** 38059.9	**128.7** 28911.7	**104.6** 23483.1	**99.0** 22233.0	
			100000	**220.4** 49492.9	**179.0** 40199.9	**145.4** 32651.7	**110.4** 24803.5	**89.7** 20146.3	**84.9** 19073.8	
				50.0	100.0	200.0	500.0	1000.0	1200.0	
160 6 5⁄16, 6 3⁄8, 6 7⁄16, 6 1⁄2	23136	**1410** 317000	10000	**508.2** 114256.6	**412.8** 92803.2	**335.3** 75378.1	**254.7** 57260.0	**206.9** 46508.6	**195.9** 44032.8	
			30000	**365.5** 82173.3	**296.9** 66744.0	**241.1** 54211.9	**183.2** 41181.3	**148.8** 33448.9	**140.9** 31668.4	
			40000	**335.3** 75378.1	**272.3** 61224.0	**221.2** 49728.9	**168.0** 37775.9	**136.5** 30682.9	**129.2** 29049.6	
			60000	**296.9** 66744.0	**241.1** 54211.9	**195.9** 44032.8	**148.8** 33448.9	**120.8** 27168.4	**114.4** 25722.2	
			100000	**254.7** 57260.0	**206.9** 46508.6	**168.0** 37775.9	**127.6** 28696.0	**103.7** 23307.9	**98.2** 22067.2	
				50.0	100.0	200.0	500.0	1000.0	1200.0	
170 6 13⁄16, 6 7⁄8, 6 15⁄16, 7	23138	**1630** 366000	10000	**587.5** 131917.7	**477.2** 107148.2	**387.6** 87029.6	**294.4** 66110.9	**239.1** 53697.6	**226.4** 50839.1	
			30000	**422.5** 94875.1	**343.2** 77060.9	**278.8** 62591.6	**211.8** 47546.9	**172.0** 38619.3	**162.8** 36563.5	
			40000	**387.6** 87029.6	**314.8** 70688.5	**255.7** 57415.7	**194.2** 43615.1	**157.8** 35425.7	**149.4** 33539.9	
			60000	**343.2** 77060.9	**278.8** 62591.6	**226.4** 50839.1	**172.0** 38619.3	**139.7** 31368.0	**132.3** 29698.2	
			100000	**294.4** 66110.9	**239.1** 53697.6	**194.2** 43615.1	**147.6** 33131.6	**119.8** 26910.7	**113.5** 25478.2	

[1]Speeds referenced here may be higher than speed rating for seals. Please refer to the charts on pages 57 – 59.
[2]For speeds greater than thermal reference speed, contact your Timken engineer.

Continued on next page.

LOAD RATINGS – *continued*

TABLE 28. TA - ALLOWABLE RADIAL LOAD (kN/LBS.) AT VARIOUS RPM[1] (CONTINUED)

Shaft Diameter	Bearing No.	C	L_{10} Life	Speed[2]					
mm in.		**kN** lbs.		RPM					
				50.0	100.0	200.0	500.0	1000.0	1200.0
180 7 1/8, 7 3/16, 7 1/4	23140	**1660** 373000	10000	**598.3** 134440.7	**486.0** 109197.5	**394.7** 88694.1	**299.8** 67375.3	**243.5** 54724.6	**230.6** 51811.5
			30000	**430.3** 96689.7	**349.5** 78534.8	**283.9** 63788.7	**215.6** 48456.3	**175.2** 39357.9	**165.8** 37262.8
			40000	**394.7** 88694.1	**320.6** 72040.5	**260.4** 58513.8	**197.8** 44449.3	**160.7** 36103.3	**152.1** 34181.4
			60000	**349.5** 78534.8	**283.9** 63788.7	**230.6** 51811.5	**175.2** 39357.9	**142.3** 31967.9	**134.7** 30266.2
			100000	**299.8** 67375.3	**243.5** 54724.6	**197.8** 44449.3	**150.3** 33765.3	**122.1** 27425.4	**115.6** 25965.5
				50.0	100.0	200.0	500.0	1000.0	
200 7 13/16, 7 7/8, 7 15/16, 8	23144	**1940** 436000	10000	**699.2** 157147.8	**567.9** 127641.1	**461.3** 103674.6	**350.4** 78755.0	**284.6** 63967.6	
			30000	**502.9** 113020.6	**408.5** 91799.4	**331.8** 74562.7	**252.0** 56640.6	**204.7** 46005.5	
			40000	**461.3** 103674.6	**374.7** 84208.2	**304.3** 68396.9	**231.2** 51956.8	**187.8** 42201.2	
			60000	**408.5** 91799.4	**331.8** 74562.7	**269.5** 60562.5	**204.7** 46005.5	**166.3** 37367.3	
			100000	**350.4** 78755.0	**284.6** 63967.6	**231.2** 51956.8	**175.6** 39468.3	**142.6** 32057.6	
				50.0	100.0	200.0	500.0		
220 8 7/16, 8 1/2, 8 15/16, 9	23148	**2200** 495000	10000	**792.9** 178413.3	**644.1** 144913.6	**523.1** 117703.0	**397.4** 89412.3		
			30000	**570.3** 128314.7	**463.2** 104221.8	**376.2** 84652.6	**285.8** 64305.2		
			40000	**523.1** 117703.0	**424.9** 95603.3	**345.1** 77652.4	**262.2** 58987.6		
			60000	**463.2** 104221.8	**376.2** 84652.6	**305.6** 68757.9	**232.1** 52231.0		
			100000	**397.4** 89412.3	**322.8** 72623.8	**262.2** 58987.6	**199.2** 44809.2		
				50.0	100.0	200.0	500.0		
240 9 7/16, 9 1/2	23152	**2440** 549000	10000	**879.5** 197876.5	**714.3** 160722.3	**580.2** 130544.4	**440.7** 99166.3		
			30000	**632.5** 142312.7	**513.7** 115591.4	**417.3** 93887.4	**317.0** 71320.4		
			40000	**580.2** 130544.4	**471.3** 106032.8	**382.8** 86123.6	**290.8** 65422.7		
			60000	**513.7** 115591.4	**417.3** 93887.4	**338.9** 76258.7	**257.5** 57928.9		
			100000	**440.7** 99166.3	**358.0** 80546.4	**290.8** 65422.7	**220.9** 49697.5		
				50.0	100.0	200.0	500.0		
260 9 15/16, 10, 10 7/16, 10 1/2	23156	**2530** 569000	10000	**911.9** 205085.1	**740.7** 166577.4	**601.6** 135300.1	**457.0** 102778.9		
			30000	**655.8** 147497.1	**532.7** 119802.4	**432.7** 97307.7	**328.7** 73918.6		
			40000	**601.6** 135300.1	**488.6** 109895.5	**396.9** 89261.1	**301.5** 67806.0		
			60000	**532.7** 119802.4	**432.7** 97307.7	**351.4** 79036.8	**267.0** 60039.3		
			100000	**457.0** 102778.9	**371.2** 83480.7	**301.5** 67806.0	**229.0** 51507.9		

[1] Speeds referenced here may be higher than speed ratings for seals. Please refer to the charts on page 57 – 59.
[2] For speeds greater than thermal reference speed, contact your Timken engineer.

Continued on next page.

Continued from previous page.

Shaft Diameter	Bearing No.	C	L_{10} Life	Speed[2]			
mm in.		**kN** lbs.		RPM			
				50.0	100.0	200.0	500.0
280 10 15⁄16, 11	23160	**3070** 690000	10000	**1106.5** 248697.3	**898.8** 202000.7	**730.0** 164072.2	**554.5** 1246353
			30000	**795.8** 178862.9	**646.4** 145278.8	**525.0** 118000.6	**398.8** 89637.6
			40000	**730.0** 164072.2	**592.9** 133265.2	**481.6** 108242.8	**365.8** 82225.2
			60000	**646.4** 145278.8	**525.0** 118000.6	**426.4** 95844.3	**323.9** 72806.9
			100000	**554.5** 124635.3	**450.4** 101233.2	**365.8** 82225.2	**277.9** 62461.3
				50.0	100.0	200.0	500.0
300 11 7⁄16, 11 1⁄2, 11 15⁄16, 12	23164	**3650** 821000	10000	**1315.6** 295913.7	**1068.6** 240351.6	**867.9** 195222.1	**659.3** 148297.9
			30000	**946.2** 212820.9	**768.5** 172860.7	**624.2** 140403.6	**474.2** 106655.8
			40000	**867.9** 195222.1	**705.0** 158566.3	**572.6** 128793.2	**435.0** 97836.1
			60000	**768.5** 172860.7	**624.2** 140403.6	**507.0** 114040.8	**385.1** 86629.6
			100000	**659.3** 148297.9	**535.5** 120452.8	**435.0** 97836.1	**330.4** 74319.9
				50.0	100.0	200.0	500.0
320 12 7⁄16, 12 1⁄2	23168	**4110** 924000	10000	**1481.4** 333038.1	**1203.2** 270505.3	**977.3** 219714.0	**742.4** 166902.9
			30000	**1065.4** 239520.8	**865.4** 194547.3	**702.9** 158018.2	**533.9** 120036.5
			40000	**977.3** 219714.0	**793.8** 178459.5	**644.8** 144951.2	**489.8** 110110.3
			60000	**865.4** 194547.3	**702.9** 158018.2	**570.9** 128348.0	**433.7** 97497.9
			100000	**742.4** 166902.9	**603.0** 135564.5	**489.8** 110110.3	**372.1** 83643.8
				50.0	100.0	200.0	500.0
340 12 15⁄16, 13, 13 7⁄16, 13 1⁄2	23172	**4250** 955000	10000	**1531.8** 344211.4	**1244.2** 279580.7	**1010.6** 227085.4	**767.7** 172502.5
			30000	**1101.7** 247556.6	**894.8** 201074.3	**726.8** 163319.7	**552.1** 124063.7
			40000	**1010.6** 227085.4	**820.8** 184446.8	**666.7** 149814.3	**506.5** 113804.4
			60000	**894.8** 201074.3	**726.8** 163319.7	**590.3** 132654.0	**448.4** 100768.9
			100000	**767.7** 172502.5	**623.5** 140112.6	**506.5** 113804.4	**384.7** 86450.1
				50.0	100.0	200.0	
360 13 15⁄16, 14	23176	**4490** 1009000	10000	**1618.3** 363674.7	**1314.5** 295389.5	**1067.7** 239925.8	
			30000	**1163.9** 261554.6	**945.4** 212443.9	**767.9** 172554.5	
			40000	**1067.7** 239925.8	**867.2** 194876.3	**704.4** 158285.4	
			60000	**945.4** 212443.9	**767.9** 172554.5	**623.7** 140154.9	
			100000	**811.0** 182256.5	**658.7** 148035.2	**535.1** 120239.5	
				50.0	100.0	200.0	

(1) Speeds referenced here may be higher than speed ratings for seals. Please refer to the charts on page 57 – 59.
(2) For speeds greater than thermal reference speed, contact your Timken engineer.

Continued on next page.

LOAD RATINGS – *continued*

TABLE 28. TA - ALLOWABLE RADIAL LOAD (kN/LBS.) AT VARIOUS RPM[1] (CONTINUED)

Shaft Diameter	Bearing No.	C	L_{10} Life	Speed[2]		
mm in.		**kN** lbs.		RPM		
380 14 15⁄16, 15	23180	**4770** 1072000	10000	**1719.3** 386381.8	**1396.4** 313833.0	**1134.2** 254906.3
			30000	**1236.5** 277885.6	**1004.3** 225708.5	**815.7** 183328.5
			40000	**1134.2** 254906.3	**921.3** 207044.0	**748.3** 168168.5
			60000	**1004.3** 225708.5	**815.7** 183328.5	**662.6** 148905.9
			100000	**861.6** 193636.3	**699.8** 157278.2	**568.4** 127746.0

[1] Speeds referenced here may be higher than speed ratings for seals. Please refer to the charts on page 57 – 59.
[2] For speeds greater than thermal reference speed, contact your Timken engineer.

HOUSING LOADS

Because solid-block mounted bearings are made of cast steel, they are built to last with high allowable load limits in multiple orientations.

Refer to the table below for the maximum recommended housing load limit.

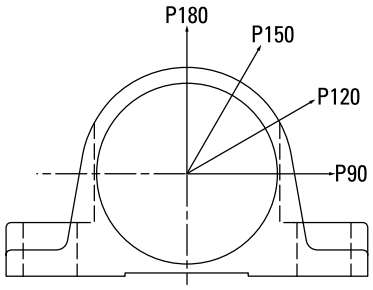

Fig. 32. Allowable housing loads.

CAUTION
Failure to follow these cautions could create a risk of injury.

Do not use damaged mounted bearings. The use of a damaged mounted bearing can result in equipment damage and/or injury.

TABLE 29. HOUSING CAPACITY CHART – QA/QM/TA/TAA SERIES

Bearing No.	Maximum Recommended Housing Loads	
	Two-Bolt	Four-Bolt
	kN lbs.	**kN** lbs.
22208	**109** 24400	N/A
22209	**117** 26400	N/A
22210	**134** 30200	N/A
22211	**158** 35400	**158** 35400
22212	**174** 39000	**174** 39000
22213	**228** 51300	**235** 52800
22214	N/A	N/A
22215	**266** 59700	**267** 60000
22216	**278** 62500	**278** 62500
22217	**320** 71900	**320** 71900
22218	**404** 90700	**425** 95500
22219	**386** 86800	**433** 97400
22220	**512** 115000	**512** 115000
22222	**478** 107400	**677** 152100
22224	**494** 110900	**547** 123000
22226	**687** 154300	**837** 188200
22228	**745** 167500	N/A
23230	**1655** 372000	**1512** 339700
23234	N/A	**2198** 494000

The values listed above are the maximum recommend housing load ratings; these loads may exceed bearing, mounting bolt and/or shaft capacities.
When side load is present, stop bars or shear strips should be used against the machined housing foot ends.
Housing maximum load listed is for all orientations shown in Fig. 32.

TABLE 30. HOUSING CAPACITY CHART – QV/DV/DAA SERIES

Bearing No.	Maximum Recommended Housing Loads	
	Two-Bolt	Four-Bolt
	kN lbs.	**kN** lbs.
22208	N/A	N/A
22209	**117** 26400	N/A
22210	**134** 30200	N/A
22211	**158** 35400	N/A
22212	174 39000	N/A
22213	**228** 51300	N/A
22214	**231** 52000	**231** 52000
22215	**266** 59700	N/A
22216	**278** 62500	**278** 62500
22217	**320** 71900	**238** 53500
22218	N/A	N/A
22219	**394** 88600	**399** 89700
22220	**512** 115000	**423** 95000
22222	**677** 152100	**677** 152100
22224	N/A	N/A
22226	**837** 188200	**837** 188200
22228	**828** 186000	**576** 129400

The values listed above are the maximum recommend housing load ratings; these loads may exceed bearing, mounting bolt and/or shaft capacities.
When side load is present, stop bars or shear strips should be used against the machined housing foot ends.

TABLE 31. HOUSING CAPACITY CHART – TAA SERIES (ONLY)

Bearing No.	Maximum Recommended Housing Loads	
	Two-Bolt	Four-Bolt
	kN lbs.	**kN** lbs.
23130	**1388** 312000	**1388** 312000
23132	N/A	**520** 116901
23134	N/A	**610** 137134
23136	N/A	**705** 158491
23138	N/A	**815** 183220
23140	N/A	**830** 186592
23144	N/A	**970** 218066
23148	N/A	**1100** 247291
23152	N/A	**1220** 274268
23156	N/A	**1265** 284385
23160	N/A	**1535** 345083
23164	N/A	**1825** 410278
23168	N/A	**2055** 461985
23172	N/A	**2125** 477721
23176	N/A	**2245** 504698
23180	N/A	**2385** 536172

The values listed above are the maximum recommend housing load ratings; these loads may exceed bearing, mounting bolt and/or shaft capacities.
When side load is present, stop bars or shear strips should be used against the machined housing foot ends.

NORMAL SPEED RATINGS FOR SEALS

TABLE 32. V-LOCK SERIES NORMAL SEAL SPEED RATINGS

Shaft Dia.	Bearing No.	Oil Lubrication			Grease Lubrication		
		M/N Seal[1]	T Seal	B/C/O Seal[1]	M/N Seal[1]	T Seal	B/C/O Seal[1]
mm in.		RPM	RPM	RPM	RPM	RPM	RPM
50 1 15/16, 2	22211	2200	3800	1800	2200	3200	1600
55 2 3/16, 2 1/4	22212 22213	2000 1800	3500 3200	1650 1500	2000 1800	3000 2800	1550 1500
60, 65 2 7/16, 2 1/2	22214 22215	1700 1600	3050 2900	1400 1300	1700 1600	2600 2400	1400 1300
70, 75 2 11/16, 2 3/4, 2 15/16, 3	22216 22217	1500 1400	2650 2400	1200 1100	1500 1400	2200 2000	1150 1100
80, 85, 90 3 3/16, 3 1/4, 3 7/16, 3 1/2	22219 22220	1300 1200	2200 2000	1000 900	1300 1200	1800 1600	950 900
100 3 11/16, 3 3/4, 3 15/16, 4	22222	900	1700	600	900	1200	600
110, 115 4 7/16, 4 1/2	22224 22226	700	1500	400	700	1000	400
125, 130 4 15/16, 5	22228	650	1200	350	650	900	350

[1]Bearings with contact seals will have higher operating temperatures than bearings with labyrinth seals.

TABLE 33. CL SERIES NORMAL SEAL SPEED RATINGS

Shaft Dia.	Bearing No.	Oil Lubrication			Grease Lubrication		
		M/N Seal[1]	T Seal	B/C/O Seal[1]	M/N Seal[1]	T Seal	B/C/O Seal[1]
mm in.		RPM	RPM	RPM	RPM	RPM	RPM
35 1 7/16, 1 1/2	22208	2700	4500	1950	2700	4000	1950
40, 45 1 11/16, 1 3/4	22209	2700	4500	1950	2700	4000	1950
50 1 15/16, 2	22210	2400	4200	1800	2400	3550	1800
55 2 3/16, 2 1/4	22211	2200	3800	1600	2200	3200	1600
60, 65 2 7/16, 2 1/2	22213	1800	3200	1500	1800	2800	1500
70, 75 2 11/16, 2 3/4, 2 15/16, 3	22215	1600	2900	1300	1600	2400	1300
80, 85, 90 3 3/16, 3 1/4, 3 7/16, 3 1/2	22218	1400	2400	1000	1400	2000	1000
100 3 15/16, 4	22220	1200	2000	900	1200	1600	900
110, 115 4 7/16, 4 1/2	22222	900	1700	600	900	1200	600
125, 130 4 15/16, 5	22226	700	1500	400	700	1000	400

[1]Bearings with contact seals will have higher operating temperatures than bearings with labyrinth seals.

TABLE 34. EC SERIES NORMAL SEAL SPEED RATINGS

Shaft Dia.	Bearing No.	Oil Lubrication			Grease Lubrication		
		M/N Seal[1]	T Seal	B/C/O Seal[1]	M/N Seal[1]	T Seal	B/C/O Seal[1]
mm in.		RPM	RPM	RPM	RPM	RPM	RPM
35 1 7/16, 1 1/2	22208	2700	4500	1950	2700	4000	1950
40, 45 1 11/16, 1 3/4	22209	2700	4500	1950	2700	4000	1950
50 1 15/16, 2	22210	2400	4200	1800	2400	3550	1800
55 2 3/16, 2 1/4	22211	2200	3800	1600	2200	3200	1600
60, 65 2 7/16, 2 1/2	22213	1800	3200	1500	1800	2800	1500
70, 75 2 11/16, 2 3/4, 2 15/16, 3	22215	1600	2900	1300	1600	2400	1300
80, 85, 90 3 3/16, 3 1/4, 3 7/16, 3 1/2	22218	1400	2400	1000	1400	2000	1000
100 3 11/16, 3 3/4, 3 15/16, 4	22220	1200	2000	900	1200	1600	900
110,115 4 7/16, 4 1/2	22222	900	1700	600	900	1200	600
125, 130 4 15/16, 5	22226	700	1500	400	700	1000	400
140, 150 5 7/16, 5 1/2, 5 15/16, 6	23230	650	950	350	600	800	350
170, 180 6 7/16, 6 1/2, 6 15/16, 7	23234	600	900	350	600	800	350

[1]Bearings with contact seals will have higher operating temperatures than bearings with labyrinth seals.

NORMAL SPEED RATINGS FOR SEALS – *continued*

TABLE 35. TA/DV TAA/DVV SERIES NORMAL SEAL SPEED RATINGS

Shaft Dia.	Bearing No.	Oil Lubrication			Grease Lubrication		
		M/N Seal[1]	T Seal	B/C/O Seal[1]	M/N Seal[1]	T Seal	B/C/O Seal[1]
mm in.		RPM	RPM	RPM	RPM	RPM	RPM
40 1 7/16, 1 1/2	22209	2700	4500	1950	2700	4000	1950
45 1 11/16, 1 3/4	22210	2400	4200	1800	2400	3550	1800
50 1 15/16, 2	22211	2200	3800	1800	2200	3200	1600
55 –	22212	2000	3500	1650	2000	3000	1550
60 2 3/16, 2 1/4	22213	1800	3200	1500	1800	2800	1500
65 2 7/16, 2 1/2	22215	1600	2900	1300	1600	2400	1300
70 2 11/16, 2 3/4	22216	1500	2650	1200	1500	2200	1150
75 2 15/16, 3	22217	1400	2400	1100	1400	2000	1100
80 3 3/16, 3 1/4	22218	1400	2400	1000	1400	2000	1000
85 –	22219	1300	2200	1000	1300	1800	950
90 3 7/16, 3 1/2	22220	1200	2000	900	1200	1600	900
100 3 15/16, 4	22222	900	1700	600	900	1200	600
110 4 3/16, 4 1/4	22224	800	1600	500	800	1100	500
115 4 7/16, 4 1/2	22226	700	1500	400	700	1000	400
125 4 15/16, 5	22228	650	1200	350	650	900	350
135 5 3/16, 5 1/4	23130	-	-	-	-	875	350
140 5 3/8, 5 7/16, 5 1/2	23132	-	-	-	-	750	500[2]
150 5 13/16, 5 7/8, 5 15/16, 6	23134	-	-	-	-	700	470[2]
160 6 5/16, 6 3/8, 6 7/16, 6 1/2	23136	-	-	-	-	650	430[2]
170 6 13/16, 6 7/8, 6 15/16, 7	23138	-	-	-	-	600	400[2]
180 7 1/8, 7 3/16, 7 1/4	23140	-	-	-	-	600	400[2]
200 7 13/16, 7 7/8, 7 15/16, 8	23144	-	-	-	-	500	330[2]
220 8 7/16, 8 1/2, 8 15/16, 9	23148	-	-	-	-	470	310[2]
240 9 7/16, 9 1/2	23152	-	-	-	-	380	250[2]
260 9 15/16, 10, 10 7/16, 10 1/2	23156	-	-	-	-	360	240[2]
280 10 15/16, 11	23160	-	-	-	-	320	210[2]
300 11 7/16, 11 1/2, 11 15/16, 12	23164	-	-	-	-	290	190[2]
320 12 7/16, 12 1/2	23168	-	-	-	-	270	180[2]
340 12 15/16, 13, 13 7/16, 13 1/2	23172	-	-	-	-	250	170[2]
360 13 15/16, 14	23176	-	-	-	-	240	160[2]
380 14 15/16, 15	23180	-	-	-	-	230	150[2]

[1]Bearings with contact seals will have higher operating temperatures than bearings with labyrinth seals.
[2]Only available in O seal.

SEAL MATERIAL CHEMICAL COMPATIBILITY

A - Little to no effect B - Minor to moderate effect C - Severe effect to destruction N - No data – test prior to use.	Urethane	Nitrile Rubber	Viton	DuPont Teflon
Acetaldehyde	C	C	C	A
Acetamide	N	A	B	A
Acetic Acid	C	B	B	A
Acetic Anhydride	C	C	C	A
Acetone	C	C	C	A
Acetyl Bromide	C	N	N	N
Acetyl Chloride	C	C	A	A
Acetylene	C	A	A	A
Adipic Acid	A	A	N	A
Aero Shell Grease	B	A-B	A	A
Aero Lubriplate	A	A	A	A
Aero Safe 2300	N	C	C	A
Aerozine 50	N	C	C	A
Aluminum Acetate	N	A	C	A
Aluminum Bromide	N	A	A	A
Aluminum Chloride	B	A	A	A
Aluminum Sulfate	B	A	A	A
Ammonia	B	B	C	A
Ammonium Carbonate	B	C	N	A
Ammonium Chloride	N	A	A	A
Ammonium Hydroxide	B	C	A	A
Ammonium Nitrate	B	A	N	A
Ammonium Persulfate	B	C	N	A
Ammonium Sulfate	B	A	C	A
Ammonium Sulfide	B	A	C	A
Ammonium Thiocyanate	B	N	N	A
Ammonium Acetate	C	N	N	A
Amyl Acetate	C	C	C	A
Amyl Alcohol	C	B	C	A
Aniline	C	C	C	A
Aniline Hydrochloride	C	B	B	B
Animal Fats and Oils	B	A	A	A
Antimony Salts	B	N	N	A
Aqua Regia	C	C	B	A
Arsenic Salts	B	N	N	A
ASTM Oil #1	A	A	A	A
ASTM Oil #2	B	A	A	A
ASTM Oil #3	B	A	A	A
ASTM Reference Fuel A	A	A	A	A
ASTM Reference Fuel B	B	B	A	A
Atlantic Oil	A	A	A	A
Barium Carbonate	B	A	A	A
Barium Hydroxide	A	A	A	A
Beer	A	A	A	A
Benzaldehyde	B	C	C	A
Benzene	C	C	B	A
Benzoic Acid	B	C	A	A
Black Sulphate Liquors	N	B	A	A

A - Little to no effect B - Minor to moderate effect C - Severe effect to destruction N - No data – test prior to use.	Urethane	Nitrile Rubber	Viton	DuPont Teflon
Bleach Solutions	N	C	A	B
Boric Acid	A	A	A	A
Brake Fluid	N	C	C	N
Bromine	B	C	A	C
Bunker Oil	A	A	A	A
Butane	A	A	A	A
Butyl Acetate	C	C	C	A
Butyl Alcohol	B	A	A	A
Calcium Carbonate	B	A	A	A
Calcium Chloride	A	A	A	A
Calcium Hydroxide	A	A	A	A
Calcium Nitrate	B	A	A	A
Calcium Sulfate	B	B	B	A
Carbon Dioxide	A	A	A	A
Carbon Disulfide	B	C	A	A
Carbon Monoxide	A	A	A	A
Carbon Tetrachloride	C	C	A	A
Chlorine	N	C	A	B
Chloroacetic Acid	C	C	C	N
Chloroform	C	N	N	B
Chromic Acid	C	C	A	B
Chromium Potassium Sulfate	A	N	N	N
Citric Acid	B	A	A	A
Corn Oil	A	A	A	A
Cottonseed Oil	A	A	A	A
Cresol	C	C	A	A
Crude Oil	B	B	A	A
Cupric Chloride	A	B	B	A
Cupric Nitrate	B	N	N	A
Cupric Sulfate	B	B	B	A
Cutting Oil	B	A	A	A
Cyclohexane	B	A	A	A
Cyclohexanone	C	C	A	A
Dibutyl Phthalate	C	C	C	B
Dichlorobenzene	C	N	N	B
Diesel Fuel	B	A	A	A
Diester Oil	B	B	A	A
Dimethyl Acetamide	C	N	N	A
Dimethyl Formamide	C	B	C	A
Dodecyl Mercaptan	B	N	N	N
DTE Oil	B	A	N	N
Dubutyl Ether	B	C	C	N
EP Lubes	A	A	A	A
Esso #90 Lube Oil	A	A	A	A
Ether	B	N	N	A
Ethyl Acetate	C	C	C	A
Ethyl Alcohol (Ethanol)	C	A	C	A
Formic Acid	C	B	C	A

DISCLAIMER: Every reasonable effort has been made to ensure the accuracy of the information in this writing, but no liability is accepted for errors, omissions or for any other reason.

Continued on next page.

Continued from previous page.

A - Little to no effect B - Minor to moderate effect C - Severe effect to destruction N - No data – test prior to use.	Urethane	Nitrile Rubber	Viton	DuPo Teflo
Freon, 12 or 113	A	A	B	A
Fuel Oil	B	A	A	A
Gasoline	B	B	A	A
Glucose	A	A	A	A
Glue	N	A	A	A
Glycerin	A	A	A	A
Heptane	A	N	N	A
Hexane	A	A	A	A
Hydrazine	C	B	C	B
Hydrobromic Acid	B	C	A	A
Hydrocarbon Oil	A	A	A	A
Hydrochloric Acid	B	C	B	A
Hydrofluoric Acid	B	C	C	A
Hydrogen	A	A	A	A
Hydrogen Peroxide	B	C	A	B
Hydrogen Sulfide	C	C	C	A
Hydrologic Acid	B	N	N	N
Iodine	A	B	A	A
Isobutyl Alcohol	N	B	A	A
Isopropyl Chloride	N	C	A	A
Isopropyl Ether	B	B	C	N
Isopropyl Alcohol (Propanol)	B	A	A	N
JP4 Oil	B	A	A	A
JP5 and 6 Oil	C	A	A	A
Kerosene	B	A	A	A
Lactic Acid	B	B	A	A
Lead Acetate	B	B	C	A
Linseed Oil	B	A	A	A
Liquefied Petroleum Gas	A	A	A	N
Lubrication Oil	B	A	A	A
Lye	N	B	B	A
Magnesium Chloride	N	A	A	A
Magnesium Hydroxide	A	B	A	A
Magnesium Salts	B	A	A	A
Maleic Acid	C	C	A	A
Mercury	B	A	A	A
Methyl Alcohol (Methanol)	A	C	A	N
Methyl Ethyl Ketone	C	C	C	A
Methylene Chloride	C	C	B	A
MIL-D-5606 Oil	C	A	A	A
MIL-L7808 Oil	B	B	A	A
Mineral Oil	A	A	A	A
Mineral Spirits	N	B	A	A
Naphthalene	B	C	A	A
Natural Gas	B	A	A	A
Nickel Salts	C	A	A	A
Oxygen	A	B	A	A
Ozone	A	C	A	A

A - Little to no effect B - Minor to moderate effect C - Severe effect to destruction N - No data – test prior to use.	Urethane	Nitrile Rubber	Viton	DuPont Teflon
Palmitic Acid	A	A	A	A
Paint Thinner	B	C	B	A
Peanut Oil	A	A	A	A
Perchloric Acid	C	C	A	A
Perchloroethylene	C	B	A	A
Petroleum	B	A	A	A
Phenol (Carbolic Acid)	C	C	A	A
Phosphoric Acid	C	C	A	A
Potassium Cyanide	A	A	A	A
Potassium Salts	B	A	A	A
Propane	B	A	A	A
Propyl Alcohol	B	A	A	A
Propylene Glycol	B	N	N	A
Pydraul Oil	C	C	A	A
SAE #10 Oil	A	A	A	A
Seawater	A	A	A	A
Silicic Acid	B	N	N	A
Silver Nitrate	B	B	A	A
Skydrol Oil	C	C	C	A
Soap	B	A	A	A
Sodium Acetate	A	B	C	A
Sodium Bicarbonate	B	A	A	A
Sodium Borate	B	A	A	A
Sodium Carbonate	B	A	A	A
Sodium Chloride	B	A	A	A
Sodium Cyanide	B	A	A	A
Sodium Hydrosulfite	B	N	N	A
Sodium Hydroxide	B	B	B	A
Sodium Hypochlorite	C	B	A	A
Sodium Nitrate	B	B	N	A
Sodium Silicate	A	A	A	A
Sodium Sulfate	B	A	A	A
Sodium Sulfide	B	A	A	A
Steam	C	C	C	A
Styrene	B	C	B	A
Sulfur Dioxide	B	C	A	A
Sulfuric Acid	C	C	A	A
Tannic Acid	A	A	A	A
Tartaric Acid	A	A	A	A
Toluene	C	N	N	A
Transformer Oil	B	N	N	A
Turpentine	C	A	A	A
Urea	B	N	N	A
Varnish	B	B	A	A
Water	B	A	A	A

DISCLAIMER: Every reasonable effort has been made to ensure the accuracy of the information in this writing, but no liability is accepted for errors, omissions or for any other reason.

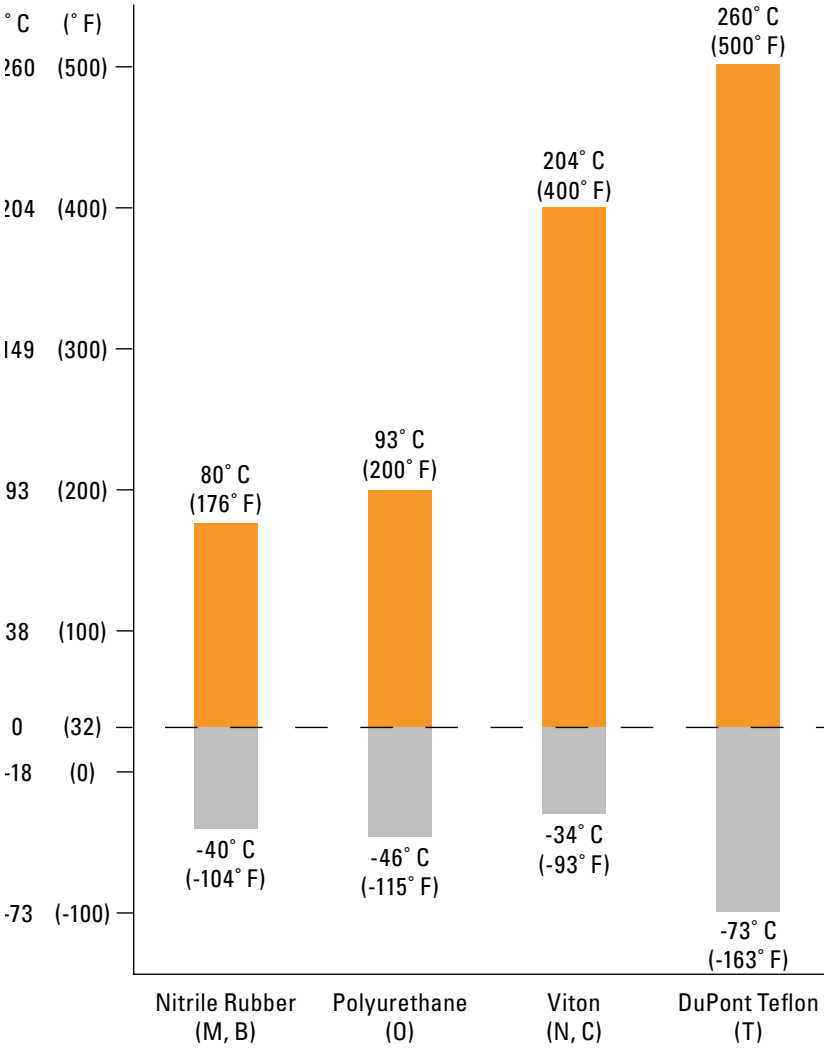

Fig. 33. Seal temperature ratings based on analytics.

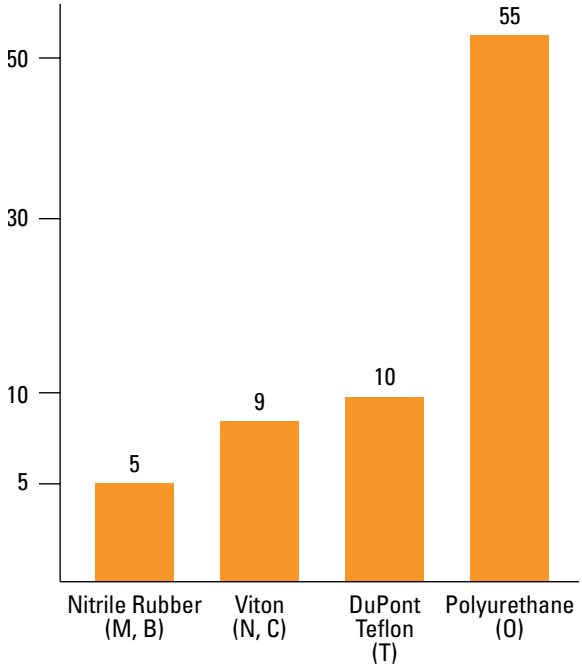

Fig. 34. Relative abrasion resistance ratings.

INTERNAL RADIAL CLEARANCES

TABLE 36. V-LOCK SERIES (TAPERED BORE, C3)

Shaft Dia.	Bearing No.	Clearance		Minimum Permissible RIC After Installation
		Min.	Max.	
mm in.		**mm** in.	**mm** in.	**mm** in.
50 1 15/16, 2	22211	**0.075** 0.0030	**0.095** 0.0037	**0.038** 0.0015
55 2 3/16, 2 1/4	22212	**0.075** 0.0030	**0.095** 0.0037	**0.038** 0.0015
55 2 3/16, 2 1/4	22213	**0.075** 0.0030	**0.095** 0.0037	**0.038** 0.0015
60, 65 2 7/16, 2 1/2	22214	**0.094** 0.0037	**0.119** 0.0047	**0.043** 0.0017
60, 65 2 7/16, 2 1/2	22215	**0.094** 0.0037	**0.119** 0.0047	**0.043** 0.0017
70, 75 2 11/16, 2 3/4, 2 15/16, 3	22216	**0.094** 0.0037	**0.119** 0.0047	**0.049** 0.0017
70, 75 2 11/16, 2 3/4, 2 15/16, 3	22217	**0.109** 0.0043	**0.140** 0.0055	**0.051** 0.0020
80, 85, 90 3 3/16, 3 1/4, 3 7/16, 3 1/2	22219	**0.109** 0.0043	**0.140** 0.0055	**0.051** 0.0020
80, 85, 90 3 3/16, 3 1/4, 3 7/16, 3 1/2	22220	**0.109** 0.0043	**0.140** 0.0055	**0.051** 0.0020
100 3 11/16, 3 3/4, 3 15/16, 4	22222	**0.135** 0.0053	**0.170** 0.0067	**0.064** 0.0025
110 –	22224	**0.135** 0.0053	**0.170** 0.0067	**0.064** 0.0025
110, 115 4 7/16, 4 1/2	22226	**0.160** 0.0063	**0.201** 0.0079	**0.076** 0.0030
125, 130 4 15/16, 5	22228	**0.160** 0.0063	**0.201** 0.0079	**0.076** 0.0030

TABLE 37. CL SERIES (STRAIGHT BORE, C NORMAL)

Shaft Dia.	Bearing No.	Clearance	
		Min.	Max.
mm in.		**mm** in.	**mm** in.
35 1 7/16, 1 1/2	22208	**0.030** 0.0012	**0.045** 0.0018
40, 45 1 11/16, 1 3/4	22209	**0.035** 0.0014	**0.055** 0.0022
50 1 15/16, 2	22210	**0.040** 0.0016	**0.065** 0.0026
55 2 3/16, 2 1/4	22211	**0.040** 0.0016	**0.065** 0.0026
60, 65 2 7/16, 2 1/2	22213	**0.040** 0.0016	**0.065** 0.0026
70, 75 2 11/16, 2 3/4, 2 15/16, 3	22215	**0.050** 0.002	**0.080** 0.0031
80, 85, 90 3 3/16, 3 1/4, 3 7/16, 3 1/2	22218	**0.060** 0.0024	**0.100** 0.0039
100 3 15/16, 4	22220	**0.075** 0.003	**0.120** 0.0047
110, 115 4 7/16, 4 1/2	22222	**0.075** 0.003	**0.120** 0.0047
125, 130 4 15/16, 5	22226	**0.095** 0.0037	**0.145** 0.0057

TABLE 38. EC SERIES (STRAIGHT BORE, C NORMAL)

Shaft Dia.	Bearing No.	Clearance	
		Min.	Max.
mm in.		**mm** in.	**mm** in.
35 1 7/16, 1 1/2	22208	**0.030** 0.0012	**0.045** 0.0018
40, 45 1 11/16, 1 3/4	22209	**0.0350** 0.0014	**0.055** 0.0022
50 1 15/16, 2	22210	**0.040** 0.0016	**0.065** 0.0026
55 2 3/16, 2 1/4	22211	**0.040** 0.0016	**0.065** 0.0026
60, 65 2 7/16, 2 1/2	22213	**0.040** 0.0016	**0.065** 0.0026
70, 75 2 11/16, 2 3/4 2 15/16, 3	22215	**0.050** 0.002	**0.080** 0.0031
80, 85, 90 3 3/16, 3 1/4 3 7/16, 3 1/2	22218	**0.060** 0.0024	**0.100** 0.0039

Shaft Dia.	Bearing No.	Clearance	
		Min.	Max.
mm in.		**mm** in.	**mm** in.
100 3 11/16, 3 3/4 3 15/16, 4	22220	**0.075** 0.003	**0.120** 0.0047
110, 115 4 7/16, 4 1/2	22222	**0.075** 0.003	**0.120** 0.0047
125, 130 4 15/16, 5	22226	**0.095** 0.0037	**0.145** 0.0057
140, 150 5 7/16, 5 1/2 5 15/16, 6	23230	**0.110** 0.0043	**0.170** 0.0067
170, 180 6 7/16, 6 1/2, 6 15/16, 7	23234	**0.120** 0.0047	**0.180** 0.0071

INTERNAL RADIAL CLEARANCES – *continued*

TABLE 39. TA (TAPERED BORE, C3)

Shaft Dia.	Bearing No.	Clearance Prior To Installation		Recommended Reduction Of Internal Radial Clearance		Recommended Axial Movement Of Adapter Sleeve		Minimum Internal Radial Clearance
		Min.	Max.	Min.	Max.	Min.	Max.	
mm in.		**mm** in.	**mm** in.	**mm** in.	**mm** in.	**mm** in.	**mm** in.	**mm** in.
40 1 7/16, 1 1/2	22209	**0.061** 0.0024	**0.079** 0.0031	**0.025** 0.0010	**0.030** 0.0012	**0.381** 0.015	**0.457** 0.018	**0.030** 0.0012
45 1 11/16, 1 3/4	22210	**0.061** 0.0024	**0.079** 0.0031	**0.025** 0.0010	**0.030** 0.0012	**0.381** 0.015	**0.457** 0.018	**0.030** 0.0012
50 1 15/16, 2	22211	**0.076** 0.0030	**0.094** 0.0037	**0.030** 0.0012	**0.038** 0.0015	**0.457** 0.018	**0.559** 0.022	**0.038** 0.0015
55 –	22212	**0.076** 0.0030	**0.094** 0.0037	**0.030** 0.0012	**0.038** 0.0015	**0.457** 0.018	**0.559** 0.022	**0.038** 0.0015
60 2 3/16, 2 1/4	22213	**0.076** 0.0030	**0.094** 0.0037	**0.030** 0.0012	**0.038** 0.0015	**0.457** 0.018	**0.559** 0.022	**0.038** 0.0015
65 2 7/16, 2 1/2	22215	**0.094** 0.0037	**0.119** 0.0047	**0.038** 0.0015	**0.051** 0.0020	**0.559** 0.022	**0.762** 0.030	**0.043** 0.0017
70 2 11/16, 2 3/4	22216	**0.094** 0.0037	**0.119** 0.0047	**0.038** 0.0015	**0.051** 0.0020	**0.559** 0.022	**0.762** 0.030	**0.043** 0.0017
75 2 15/16, 3	22217	**0.109** 0.0043	**0.140** 0.0055	**0.046** 0.0018	**0.064** 0.0025	**0.686** 0.027	**0.965** 0.038	**0.051** 0.0020
80 3 3/16, 3 1/4	22218	**0.109** 0.0043	**0.140** 0.0055	**0.046** 0.0018	**0.064** 0.0025	**0.686** 0.027	**0.965** 0.038	**0.051** 0.0020
85 –	22219	**0.109** 0.0043	**0.140** 0.0055	**0.046** 0.0018	**0.064** 0.0025	**0.686** 0.027	**0.965** 0.038	**0.051** 0.0020
90 3 7/16, 3 1/2	22220	**0.109** 0.0043	**0.140** 0.0055	**0.046** 0.0018	**0.064** 0.0025	**0.686** 0.027	**0.965** 0.038	**0.051** 0.0020
100 3 15/16, 4	22222	**0.135** 0.0053	**0.170** 0.0067	**0.051** 0.0020	**0.071** 0.0028	**0.762** 0.030	**1.067** 0.042	**0.064** 0.0025
110 4 3/16, 4 1/4	22224	**0.135** 0.0053	**0.170** 0.0067	**0.051** 0.0020	**0.071** 0.0028	**0.762** 0.030	**1.067** 0.042	**0.064** 0.0025
115 4 7/16, 4 1/2	22226	**0.160** 0.0063	**0.201** 0.0079	**0.064** 0.0025	**0.089** 0.0035	**0.889** 0.035	**1.270** 0.050	**0.076** 0.0030
125 4 15/16, 5	22228	**0.160** 0.0063	**0.201** 0.0079	**0.064** 0.0025	**0.089** 0.0035	**0.889** 0.035	**1.270** 0.050	**0.076** 0.0030
135 5 3/16, 5 1/4	23130	**0.180** 0.0071	**0.231** 0.0091	**0.076** 0.0030	**0.102** 0.0040	**1.140** 0.0449	**1.520** 0.0598	**0.075** 0.0030
140 5 3/8, 5 7/16, 5 1/2	23132	**0.180** 0.0071	**0.231** 0.0091	**0.076** 0.0030	**0.102** 0.0040	**1.140** 0.0449	**1.520** 0.0598	**0.075** 0.0030
150 5 13/16, 5 7/8, 5 15/16, 6	23134	**0.201** 0.0079	**0.259** 0.0102	**0.076** 0.0030	**0.114** 0.0045	**1.255** 0.04939	**1.816** 0.07150	**0.089** 0.0035
160 6 5/16, 6 3/8, 6 7/16, 6 1/2	23136	**0.201** 0.0079	**0.259** 0.0102	**0.076** 0.0030	**0.114** 0.0045	**1.255** 0.04939	**1.816** 0.07150	**0.089** 0.0035
170 6 13/16, 6 7/8, 6 15/16, 7	23138	**0.221** 0.0087	**0.290** 0.0114	**0.089** 0.0035	**0.127** 0.0050	**1.539** 0.06061	**2.090** 0.08228	**0.102** 0.0040
180 7 1/8, 7 3/16, 7 1/4	23140	**0.221** 0.0087	**0.290** 0.0114	**0.089** 0.0035	**0.127** 0.0050	**1.539** 0.06061	**2.090** 0.08228	**0.102** 0.0040
200 7 13/16, 7 7/8, 7 15/16, 8	23144	**0.249** 0.0098	**0.320** 0.0126	**0.102** 0.0040	**0.140** 0.0055	**1.671** 0.06578	**2.232** 0.08789	**0.114** 0.0045
220 8 7/16, 8 1/2, 8 15/16, 9	23148	**0.269** 0.0106	**0.351** 0.0138	**0.114** 0.0045	**0.152** 0.0060	**1.959** 0.07711	**2.520** 0.09922	**0.114** 0.0045
240 9 7/16, 9 1/2	23152	**0.300** 0.0118	**0.391** 0.0154	**0.114** 0.0045	**0.165** 0.0065	**1.959** 0.07711	**2.794** 0.11000	**0.140** 0.0055
260 9 15/16, 10, 10 7/16, 10 1/2	23156	**0.300** 0.0118	**0.391** 0.0154	**0.114** 0.0045	**0.165** 0.0065	**1.959** 0.07711	**2.794** 0.11000	**0.140** 0.0055
280 10 15/16, 11	23160	**0.330** 0.0130	**0.429** 0.0169	**0.127** 0.0050	**0.178** 0.0070	**2.090** 0.08228	**2.936** 0.11561	**0.152** 0.0060
300 11 7/16, 11 1/2, 11 15/16, 12	23164	**0.361** 0.0142	**0.470** 0.0185	**0.140** 0.0055	**0.191** 0.0075	**2.232** 0.08789	**3.068** 0.12078	**0.165** 0.0065
320 12 7/16, 12 1/2	23168	**0.361** 0.0142	**0.470** 0.0185	**0.140** 0.0055	**0.191** 0.0075	**2.232** 0.08789	**3.068** 0.12078	**0.165** 0.0065
340 12 15/16, 13, 13 7/16, 13 1/2	23172	**0.399** 0.0157	**0.521** 0.0205	**0.152** 0.0060	**0.203** 0.0080	**2.520** 0.09922	**3.356** 0.13211	**0.191** 0.0075
360 13 15/16, 14	23176	**0.399** 0.0157	**0.521** 0.0205	**0.152** 0.0060	**0.203** 0.0080	**2.520** 0.09922	**3.356** 0.13211	**0.191** 0.0075
380 14 15/16, 15	23180	**0.399** 0.0157	**0.521** 0.0205	**0.152** 0.0060	**0.203** 0.0080	**2.520** 0.09922	**3.356** 0.13211	**0.191** 0.0075

SHAFTING

When installing and using mounted bearings, all shafting should be straight, clean, free from burrs and within the recommended shaft tolerances in tables 40 and 41. For applications that involve high speed or extreme vibration conditions, we recommend that all shafting be machined to one-half the recommended tolerances below.

SHAFT EXPANSION

Steel expands or contracts 0.0000113 millimeters per millimeter for each degree Celsius (0.0000063 inches per inch for each degree Fahrenheit) relative temperature increase or decrease respectively. Expansion bearings are used to accommodate thermal expansion of steel. Where the shafting and the framework on which the bearings and shafting are mounted are made from steel, the relative difference in expansion between the shaft and the framework will be minimal. In these conditions, fixed bearings can be used on both ends of the shaft. However, if there is a difference in material between the shaft and the framework, or if the application involves different temperatures from the shaft to the frame, then only one fixed bearing should be used on each shaft. All other bearings on the same shaft should be converted to floating to accommodate thermal expansion of the shaft.

TABLE 40. V-LOCK, CL AND EC SERIES – RECOMMENDED SHAFT TOLERANCES

Shaft Dia.	Shaft Tolerance
mm in.	**mm** in.
35 1 7/16, 1 ½	**+0.00/-0.025** +0.00/-0.0010
40, 45 1 11/16, 1 ¾	**+0.00/-0.038** + 0.00/-0.0015
50 1 15/16, 2	**+0.00/-0.038** + 0.00/-0.0015
55 2 3/16, 2 ¼	**+0.00/-0.038** + 0.00/-0.0015
60, 65 2 7/16, 2 ½	**+0.00/-0.038** + 0.00/-0.0015
70, 75 2 11/16, 2 ¾, 2 15/16, 3	**+0.00/-0.051** + 0.00/-0.0020
80, 85, 90 3 3/16, 3 ¼, 3 7/16, 3 ½	**+0.00/-0.076** + 0.00/-0.0030
100 3 11/16, 3 ¾, 3 15/16, 4	**+0.00/-0.076** + 0.00/-0.0030
110, 115 4 7/16, 4 ½	**+0.00/-0.127** + 0.00/-0.0050
125, 130 4 15/16, 5	**+0.00/-0.127** + 0.00/-0.0050
140, 150 5 7/16, 5 ½, 5 15/16, 6	**+0.00/-0.127** + 0.00/-0.0050
170, 180 6 7/16, 6 ½, 6 15/16, 7	**+0.00/-0.127** + 0.00/-0.0050

SHAFT TOLERANCES

TABLE 41. TA/DV TAA/DVV RECOMMENDED SHAFT TOLERANCES

Shaft Dia.	Shaft Tolerance	Shaft Dia.	Shaft Tolerance
mm in.	**mm** in.	**mm** in.	**mm** in.
40 1 7/16, 1 1/2	**+0.00/-0.025** +0.00/-0.0010	**140** 5 3/8, 5 7/16, 5 1/2	**+0.00/-0.127** +0.00/-0.0050
45 1 11/16, 1 3/4	**+0.00/-0.051** +0.00/-0.0020	**150** 5 13/16, 5 7/8, 5 15/16, 6	**+0.00/-0.127** +0.00/-0.0050
50 1 15/16, 2	**+0.00/-0.076** + 0.00/-0.0030	**160** 6 5/16, 6 3/8, 6 7/16, 6 1/2	**+0.00/-0.127** +0.00/-0.0050
55 –	**+0.00/-0.076** –	**170** 6 13/16, 6 7/8, 6 15/16, 7	**+0.00/-0.127** +0.00/-0.0050
60 2 3/16, 2 1/4	**+0.00/-0.076** + 0.00/-0.0030	**180** 7 1/8, 7 3/16, 7 1/4	**+0.00/-0.127** +0.00/-0.0050
65 2 7/16, 2 1/2	**+0.00/-0.089** + 0.00/-0.0035	**200** 7 13/16, 7 7/8, 7 15/16, 8	**+0.00/-0.127** +0.00/-0.0050
70 2 11/16, 2 3/4	**+0.00/-0.102** + 0.00/-0.0040	**220** 8 7/16, 8 1/2, 8 15/16, 9	**+0.00/-0.152** + 0.00/-0.0060
75 2 15/16, 3	**+0.00/-0.102** + 0.00/-0.0040	**240** 9 7/16, 9 1/2	**+0.00/-0.152** + 0.00/-0.0060
80 3 3/16, 3 1/4	**+0.00/-0.102** + 0.00/-0.0040	**260** 9 15/16, 10, 10 7/16, 10 1/2	**+0.00/-0.152** + 0.00/-0.0060
85 –	**+0.00/-0.102** –	**280** 10 15/16, 11	**+0.00/-0.178** + 0.00/-0.0070
90 3 7/16, 3 1/2	**+0.00/-0.102** + 0.00/-0.0040	**300** 11 7/16, 11 1/2, 11 15/16, 12	**+0.00/-0.178** + 0.00/-0.0070
100 3 15/16, 4	**+0.00/-0.102** + 0.00/-0.0040	**320** 12 7/16, 12 1/2	**+0.00/-0.203** + 0.00/-0.0080
110 4 3/16, 4 1/4	**+0.00/-0.102** + 0.00/-0.0040	**340** 12 15/16, 13, 13 7/16, 13 1/2	**+0.00/-0.203** + 0.00/-0.0080
115 4 7/16, 4 1/2	**+0.00/-0.102** + 0.00/-0.0040	**360** 13 15/16, 14	**+0.00/-0.203** + 0.00/-0.0080
125 4 15/16, 5	**+0.00/-0.127** + 0.00/-0.0050	**380** 14 15/16, 15	**+0.00/-0.203** + 0.00/-0.0080
135 5 3/16, 5 1/4	**+0.00/-0.127** +0.00/-0.0050		

CONVERSION FROM FIXED TO FLOATING

Mounted bearings are easily converted from fixed to floating in the field (see the appropriate installation guide in this catalog for instructions). The following table will help you determine the amount of float for each bearing based on the number of revolutions the external housing nut is backed out.

TABLE 42. AMOUNT OF FLOAT PER ONE ROTATION OF EXTERNAL HOUSING NUT

Bearing Number	Float	Bearing Number	Float
	mm in.		**mm** in.
22208	**1.270** 0.050	23234	**2.108** 0.083
22209	**1.270** 0.050	23130	**2.108** 0.083
22210	**1.270** 0.050	23132	**2.108** 0.083
22211	**1.270** 0.050	23134	**2.108** 0.083
22212	**1.270** 0.050	23136	**2.108** 0.083
22213	**2.108** 0.083	23138	**2.108** 0.083
22214	**2.108** 0.083	23140	**2.108** 0.083
22215	**2.108** 0.083	23144	**2.108** 0.083
22216	**2.108** 0.083	23148	**2.108** 0.083
22217	**2.108** 0.083	23152	**2.108** 0.083
22218	**2.108** 0.083	23156	**2.108** 0.083
22219	**2.108** 0.083	23160	**2.108** 0.083
22220	**2.108** 0.083	23164	**2.108** 0.083
22222	**2.108** 0.083	23168	**2.108** 0.083
22224	**2.108** 0.083	23172	**2.108** 0.083
22226	**2.108** 0.083	23176	**2.108** 0.083
22228	**2.108** 0.083	23180	**2.108** 0.083
23230	**2.108** 0.083		

LUBRICATION

Timken is dedicated to using the highest quality components in everything we do. This is why we use premium industrial grease in solid-block mounted spherical roller bearings. The lithium-complex extreme-pressure grease combines the benefits of wide operating temperatures and broad compatibility. This grease offers excellent thermal stability through temperatures ranging from -15° C to 120° C (5° F to 248° F). When dealing with temperatures above 149° C (300° F), consult your Timken engineer for optional grease recommendations. Application-specific lubrication options are also available ranging from Timken Food Safe Grease (aluminum-complex) to Timken Mill grease (calcium-sulfonate) along with many others.

MISALIGNMENT

All mounted spherical roller bearings utilize self-aligning double-row spherical roller bearings. Because of this, the mounted bearing accommodates angular misalignment up to 1.5 degrees. The life performance of our mounted bearing is not reduced while under misalignment conditions within these guidelines. It will accept both radial and thrust loads under static, oscillatory or dynamic load conditions.

TABLE 43. MISALIGNMENT SCALE AT 1.5 DEGREES

A	B
m ft.	**mm** in.
0.305 1	**7.981** 0.314
1.524 5	**39.905** 1.570

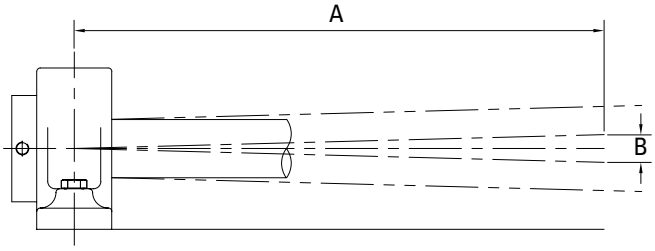

Fig. 35. Misalignment.

INSTALLATION GUIDES

V-LOCK SERIES

Timken® solid-block mounted V-Lock bearings are easy to install and remove because of their unique adapters.

Please complete the following steps to install and/or remove Timken steel mounted V-Lock bearings. Refer to fig. 36.

- Ensure that the shaft is clean, free from nicks and burrs, straight and of proper diameter. See table 45 for recommended shaft tolerances. The mounted bearing should not be mounted on a worn section of the shaft.
- If using an open-end cover, slide the open-end cover/seal combination into position on the shaft.
- Remove the wedge assembly from the sleeve by unscrewing the wedge nut. See fig. 36.
- Clean oil off of the sleeve and wedge.
- Apply a thin oil film to the shaft only.
  - For **QV** single-nut mounted bearings:
    - Slide the sleeve, non-threaded end first, into position on the shaft.
  - For **QVV** double-nut mounted bearings:
    - Make sure the sleeve nut is flush with the end of the sleeve.
    - Slide the sleeve/nut assembly, nut end first, into position on the shaft.
- Slide the mounted bearing into place over the sleeve.
- Loosely install the mounted bearing mounting bolts. Check the mounted bearing alignment. Verify that the mounting surfaces are in the same flat plane to help achieve good alignment. If shimming is required to minimize misalignment, use full shims across the entire housing base where possible (fig. 37). Washers should be properly sized to bolt diameter and should not be an SAE grade, which is smaller.
- Seat the sleeve as best as possible into the mounted bearing.
- Tighten the wedge assembly by turning the wedge nut clockwise until tight. Please note that it is designed to prevent overtightening.
- If installing a double-nut mounted bearing, tighten the sleeve assembly by turning the sleeve nut clockwise until snug.
- Tighten both the wedge nut and sleeve nut set screws alternately according to fig. 36.
- Install the mounted bearing mounting bolts. Check the mounted bearing alignment. Verify that the mounting surfaces are in the same flat plane to achieve good alignment. If shimming is required to minimize misalignment, use full shims across the entire housing base where possible (fig. 37). The bolts then need to be alternately torqued securely to their mounting supports.

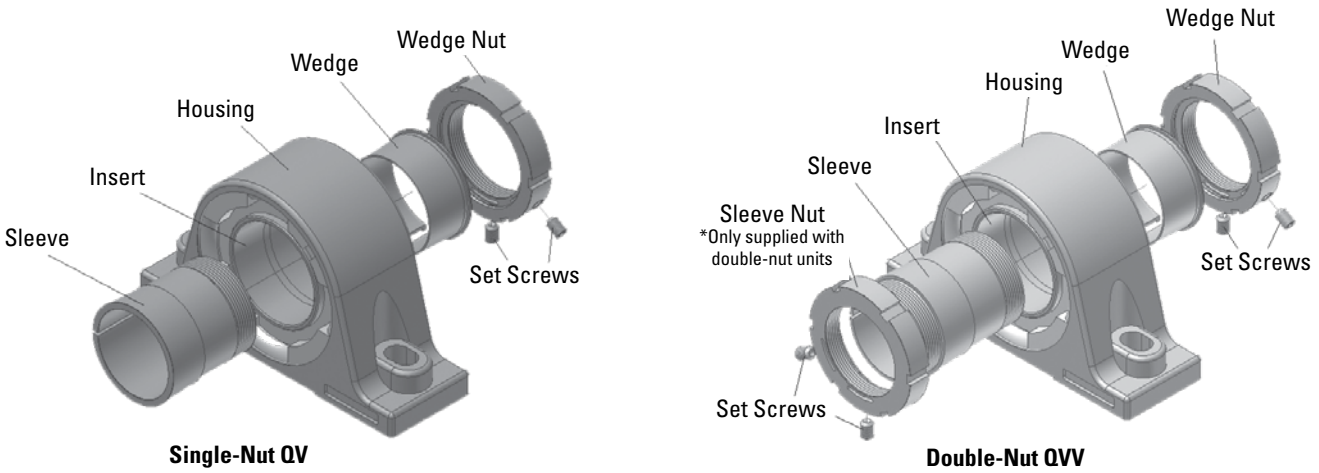

Fig. 36. V-Lock insert components.

TABLE 44. SET SCREW TORQUE VALUES

Shaft Dia.	Bearing No.	Set Screw Size	Torque
mm in.		**mm** in.	**Nm** in.-lbs.
50-90 1 15⁄16 - 3 1⁄2	SLV11 to SLV20	**M10 X 1.5** 3⁄8-24 TPI	**32.8** 290
100 3 11⁄16 - 4	SLV22	**M12 X 1.75** 7⁄16-20 TPI	**47.5** 420
110-130 4 7⁄16 - 5	SLV24 to SLV28	**M12 X 1.75** 1⁄2-20 TPI	**70.1** 620

- Tighten the housing mounting bolts.

If using covers:

- Make sure the mating surface of the cover and retaining nuts are clean and dry.
  - Urethane cover: Slightly roughen the mating surface of the cover, place a 3 mm – 6 mm (⅛ in. – ¼ in.) bead of polyurethane adhesive sealant on the roughened surface.
  - Steel cover: Place a 3 mm – 6 mm (⅛ in. – ¼ in.) bead of silicone adhesive sealant on the mating surface of the cover.
- Align the cover mounting holes with the mounting holes on the retaining housing nut (make sure that the grease fitting on the cover is accessible when doing so).
- Apply and tighten the cover mounting hardware.

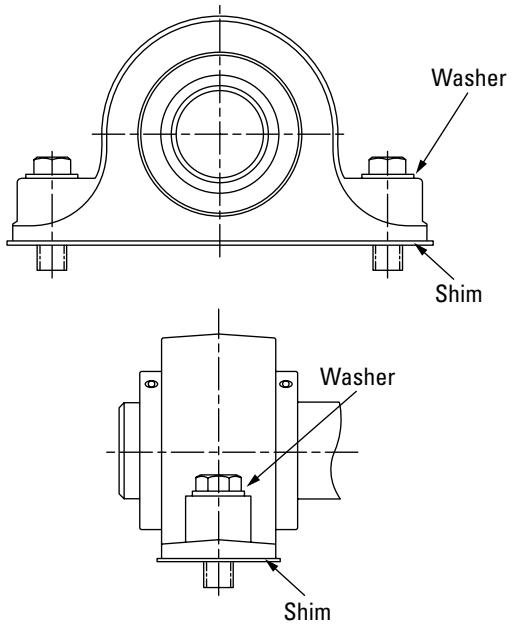

Fig. 37. Use washers and full shims.

REMOVAL

- Remove covers, if applicable, by removing cover hardware and disengaging the cover from the mounted bearing retaining nut.
- Loosen the set screws on the wedge nut.
- Turn the wedge nut counterclockwise to remove the wedge from the locked position.
- Completely remove the wedge/wedge nut assembly.
  - For **QV** mounted bearings:
    - Remove the bearing and sleeve from the shaft.
  - For **QVV** mounted bearings:
    - Loosen the set screws on the sleeve nut.
    - Turn the sleeve nut clockwise to un-seat the sleeve.
    - Remove the bearing and sleeve/sleeve nut from the shaft.

TABLE 45. RECOMMENDED SHAFT TOLERANCES

Shaft Dia.	Bearing No.	Tolerance
mm in.		**mm** in.
50 1 15⁄16, 2	22211	**+0.00/-0.038** +0.00/-0.0015
55 2 3⁄16, 2 1⁄4	22212 22213	
60, 65 2 7⁄16, 2 1⁄2	22214 22215	
70, 75 2 11⁄16, 2 3⁄4, 2 15⁄16, 3	22216 22217	**+0.00/-0.051** +0.00/-0.0020
80, 85, 90 3 3⁄16, 3 1⁄4, 3 7⁄16, 3 1⁄2	22219 22220	**+0.00/-0.076** +0.00/-0.0030
100 3 11⁄16, 3 15⁄16, 4	22222	**+0.00/-0.076** +0.00/-0.0030
110, 115 4 7⁄16, 4 1⁄2	22224 22226	**+0.00/-0.127** +0.00/-0.0050
125, 130 4 15⁄16, 5	22228	

HOW TO CONVERT A SOLID-BLOCK MOUNTED BEARING FROM FIXED TO EXPANSION (FLOATING)

Flange Cartridge and Flange Block

- Make a reference mark on the housing and retaining nut.
- Loosen the Nylon-tipped set screw that locks the retaining nut in place.
- Loosen the retaining nut by tapping it with a hammer and punch, rotating the retaining nut counterclockwise one complete revolution.
- Tighten the Nylon-tipped set screw.

Pillow Block

- Decide the amount and direction of expansion that's needed. If unidirectional expansion is required, follow the directions outlined in the previous page for flange mounted bearings on the nut that is on the side you want the expansion.
- If multi-directional expansion is required, follow the directions outlined in the previous section for both nuts on flange mounted bearings.

NOTE

When converting a solid-block mounted bearing from fixed to expansion, it is imperative that the unit that is going to be converted is correctly oriented. Since the insert in a steel mounted flange bearing is held against either a shoulder or snap ring opposite the housing retaining nut, a flange bearing that has been converted to expansion can only float in the direction of the retaining nut. Based on this, the retaining nut must be on the side of the housing opposite the fixed bearing.

HOW TO CONVERT A SOLID-BLOCK MOUNTED BEARING FROM EXPANSION (FLOATING) TO FIXED

Flange Cartridge and Flange Block

- Loosen the Nylon-tipped set screw that locks the retaining nut in place.
- Tighten the retaining nut by tapping it with a hammer and punch, rotating the retaining nut clockwise until it's tight. It is not possible to overtighten the retaining nut.
- Tighten the Nylon-tipped set screw.

Pillow Block

- Follow the directions above for flange mounted bearings on both nuts on either side of the housing.

NOTE

When converting a solid-block mounted bearing from expansion to fixed on a mounted bearing, the locking-collar set screws must be released to allow the insert to move both in the housing and on the shaft.

WARNING

Failure to observe the following warnings could create a risk of death or serious injury.

Proper maintenance and handling practices are critical. Always follow installation instructions and maintain proper lubrication.

Overheated bearings can ignite explosive atmospheres. Special care must be taken to properly select, install, maintain, and lubricate mounted bearings that are used in or near atmospheres that may contain explosive levels of combustible gases or accumulations of dust such as from grain, coal, or other combustible materials. Consult your equipment designer or supplier for installation and maintenance instructions.

If hammer and bar are used for installation or removal of a part, use a mild steel bar (e.g., 1010 or 1020 grade). Mild steel bars are less likely to cause release of high speed fragments from the hammer or bar or the part being installed or removed.

CAUTION

Failure to follow these cautions may result in property damage.

Do not use damaged mounted bearings.

LUBRICATION

This information is to aid in the proper lubrication of Timken solid-block mounted spherical roller bearings for the majority of applications.

Mounted bearings have been factory-prelubricated with an NLGI No. 2 lithium-complex, extreme-pressure synthetic grease that combines the benefits of wide operating temperatures and broad compatibility with varied materials. This grease offers excellent thermal stability through temperatures ranging from -15° C to 120° C (5° F to 248° F). Mounted bearings should be relubricated with this grease or one that is compatible and made for roller bearings. It is vital that the greases used are compatible. Please consult

with your Timken engineer for the grease specifications if the use of a grease other than the grease mentioned above is needed.

Normal service is considered as operation in a clean, dry environment at temperatures between -34° C to +82° C (-30° F to +180° F). If service is beyond normal conditions due to speed, temperature, or exposure to moisture, dirt or corrosive chemicals, more frequent relubrication may be necessary. For extreme conditions or conditions in which special chemicals are used, consult with your Timken engineer.

After extended storage or periods when the mounted bearing is not in operation, fresh grease should be added.

It's important to have the right amount of lubrication, because it affects the mounted bearing operating temperature as well. An inadequate amount of grease could lead to higher operating temperatures due to inadequate lubrication film thickness. Excessive grease also will lead to higher operating temperatures due to grease churning, which can cause bearing overheating. It is best to observe the bearing and its temperature and adjust the lubrication as needed. If necessary, use the purge valve or seals that purge to reduce the amount of grease.

NOTE

Please check with the manufacturer of your grease delivery system for specific information.

RELUBRICATION

Adequate lubrication is an essential element to the mounted bearing life. Use table 46 as a suggested initial point of reference. Relubrication frequency and quantity intervals are best determined through experience for each application, based on types of service, which may differ from the suggestions in the table.

When the mounted bearing is not in operation for an extended period of time, grease should be added to prevent corrosion.

Table 46 shows general lubrication suggested starting points only. Please read the entire installation instructions prior to using these tables. Applications should be regularly reviewed and lubrication amounts and intervals modified as needed to ensure best results.

TABLE 46. RELUBRICATION INTERVALS

Shaft Diameter	Bearing No.	Initial Weight	Relubrication Weight	Relubrication Interval (Hours of Service based on RPM and Temperature deg. F)											
				100 RPM		250 RPM		500 RPM		1000 RPM		2000 RPM		3000 RPM	
				<160°	>160°	<160°	>160°	<160°	>160°	<160°	>160°	<160°	>160°	<160°	>160°
mm in.		**g** oz.	**g** oz.												
50 1 15/16, 2	22211	**19.8** 0.7	**8.5** 0.3	1200	600	800	400	440	220	160	80	100	50	60	30
55 2 3/16, 2 1/4	22212	**31.2** 1.1	**8.5** 0.3	1150	580	750	380	400	200	140	70	90	50	50	20
	22213	**34.0** 1.2	**11.3** 0.4	1130	570	740	370	380	190	130	65	85	45	45	20
60, 65 2 7/16, 2 1/2	22214	**42.5** 1.5	**11.3** 0.4	1120	560	720	360	360	180	120	60	80	40	40	20
	22215	**39.7** 1.4	**14.2** 0.5	1080	540	700	350	350	175	110	55	70	35		
70, 75 2 11/16, 2 3/4 2 15/16, 3	22216	**53.9** 1.9	**19.9** 0.7	1040	520	680	340	340	170	100	50	60	30		
	22217	**59.5** 2.1	**25.5** 0.9	1000	500	640	320	320	160	100	50	60	30		
80, 85, 90 3 3/16, 3 1/4 3 7/16, 3 1/2	22219	**99.2** 3.5	**25.5** 0.9	960	480	600	300	300	150	80	40	40	20		
	22220	**107.7** 3.8	**45.4** 1.6	840	420	520	260	240	120	70	35	30	18		
100 3 11/16, 3 3/4 3 15/16, 4	22222	**153.1** 5.4	**53.9** 1.9	680	340	440	220	200	100	60	30	20	16		
110, 115 4 7/16, 4 1/2	22224	**198.4** 7.0	**68.0** 2.4	640	320	400	200	180	90	50	25				
	22226	**238.1** 8.4	**76.5** 2.7	560	280	360	180	160	80						
125, 130 4 15/16, 5	22228	**326.0** 11.5	**99.2** 3.5	520	260	340	170	140	75						

DISCLAIMER: Every reasonable effort has been made to ensure the accuracy of the information in this writing, but no liability is accepted for errors, omissions or for any other reason.

CL SERIES

Please complete the following steps to install Timken solid-block mounted CL series bearings.

- Ensure that the shaft is clean, free from nicks and burrs, straight and of proper diameter. See table 47 for recommended shaft tolerances. The mounted bearing should not be mounted on a worn section of the shaft. Using shafts with hardness greater than HRC 45 will reduce the effectiveness of locking devices.
- If using an open-end cover, slide the open-end cover/seal combination into position on the shaft.
- Apply a thin oil film to the shaft and bearing bore.
- Slide the mounted bearing into position on the shaft.
- Install the mounted bearing mounting bolts. Check the mounted bearing alignment. Verify mounting surfaces are in the same flat plane to help achieve good alignment. If shimming is required to minimize misalignment, use full shims across the entire housing base where possible (fig. 39). The bolts then need to be alternately torqued securely to their mounting supports.
- Tighten set screws alternately as per table 48. Set screws in multiple units should be aligned to each other (fig. 38).

If using covers:

- Make sure the mating surface of the cover and retaining nuts are clean and dry.
  - Urethane cover: slightly roughen the mating surface of the cover, place a 3 mm – 6 mm (1/8 in. – 1/4 in.) bead of polyurethane adhesive sealant on the roughened surface.
  - Steel cover: place a 3 mm – 6 mm (1/8 in. – 1/4 in.) bead of silicone adhesive sealant on the mating surface of the cover.
- Align the cover mounting holes with the mounting holes on the retaining housing nut (make sure that the grease fitting on the cover is accessible when doing so).
- Apply and tighten the cover mounting hardware.

TABLE 47. RECOMMENDED SHAFT TOLERANCES

Shaft Dia.	Bearing No.	Tolerance
mm in.		**mm** in.
35 1 7/16, 1 1/2	22208	**+0.00/-0.025** +0.00/0.0010
40, 45 1 11/16, 1 3/4	22209	**+0.00/-0.038** +0.00/0.0015
50 1 15/16, 2	22210	**+0.00/-0.038** +0.00/-0.0015
55 2 3/16, 2 1/4	22211	**+0.00/-0.038** +0.00/-0.0015
60, 65 2 7/16, 2 1/2	22213	**+0.00/-0.038** +0.00/-0.0015
70, 75 2 11/16, 2 3/4 2 15/16, 3	22215	**+0.00/-0.051** +0.00/-0.0020
80, 85, 90 3 3/16, 3 1/4 3 7/16, 3 1/2	22218	**+0.00/-0.076** +0.00/-0.0030
100 3 15/16, 4	22220	**+0.00/-0.076** +0.00/-0.0030
110, 115 4 7/16, 4 1/2	22222	**+0.00/-0.127** +0.00/-0.0050
125, 130 4 15/16, 5	22226	**+0.00/-0.127** +0.00/-0.0050

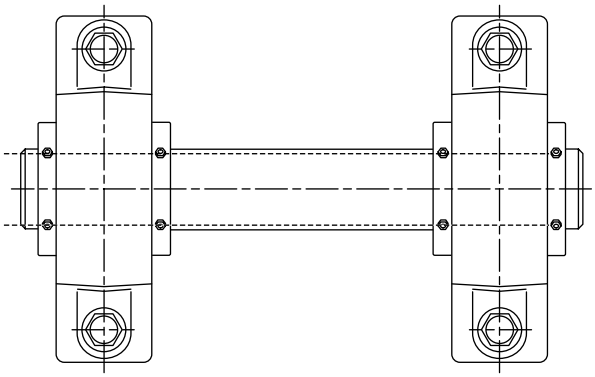

Fig. 38. Line up set screws in multiple units.

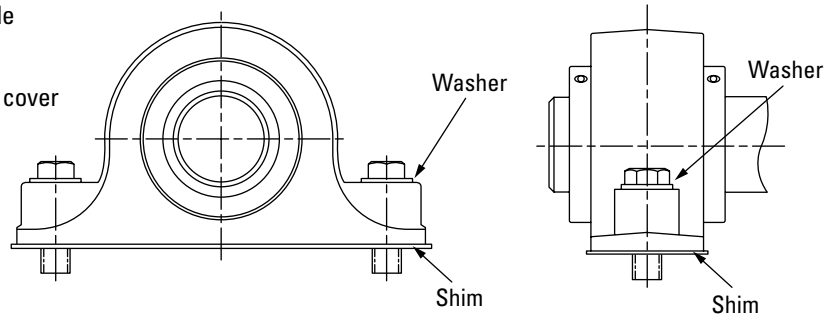

Fig. 39. Use washers and full shims.

TABLE 48. SET SCREW TORQUE VALUES

Shaft Dia.	Bearing No.	Set Screw Size	Torque
mm in.		**mm** in.	**Nm** lbs.
35 1 7⁄16, 1 ½	22208	**M10 X 1.5** ⅜ - 24 TPI	**32.8** 290
40, 45 1 11⁄16, 1 ¾	22209	**M10 X 1.5** ⅜ - 24 TPI	**32.8** 290
50 1 15⁄16, 2	22210	**M10 X 1.5** ⅜ - 24 TPI	**32.8** 290
55 2 3⁄16, 2 ¼	22211	**M10 X 1.5** ⅜ - 24 TPI	**32.8** 290
60, 65 2 7⁄16, 2 ½	22213	**M12 X 1.75** ½ - 20 TPI	**70.1** 620
70, 75 2 11⁄16, 2 ¾ 2 15⁄16, 3	22215	**M12 X 1.75** ½ - 20 TPI	**70.1** 620
80, 85, 90 3 3⁄16, 3 ¼ 3 7⁄16, 3 ½	22218	**M12 X 1.75** ½ - 20TPI	**70.1** 620
100 3 15⁄16, 4	22220	**M16 X 2** ⅝ - 18 TPI	**149.7** 1325
110, 115 4 7⁄16, 4 ½	22222	**M16 X 2** ⅝ - 18 TPI	**149.7** 1325
125, 130 4 15⁄16, 5	22226	**M16 X 2** ⅝ - 18 TPI	**149.7** 1325

LUBRICATION

This information is to aid in the proper lubrication of Timken solid-block mounted spherical roller bearings for the majority of applications.

Mounted bearings have been factory-prelubricated with an NLGI No. 2 lithium-complex, extreme pressure synthetic grease that combines the benefits of wide operating temperatures and broad compatibility with varied materials. This grease offers excellent thermal stability through temperatures ranging from -15° C to 120° C (5° F to 248° F). Mounted bearings should be relubricated with this grease or one that is compatible and made for roller bearings. It is vital that the greases used are compatible. Please consult with your Timken engineer for the grease specifications if the use of a grease other than the grease mentioned above is needed.

Normal service is considered as operation in a clean, dry environment at temperatures between -34° C to +82° C (-30° F to +180° F). If service is beyond normal conditions due to speed, temperature, or exposure to moisture, dirt or corrosive chemicals, periodic relubrication may be necessary. For extreme conditions or conditions in which special chemicals are used, consult with your Timken engineer.

After extended storage or periods when the mounted bearing is not in operation, fresh grease should be added.

It is important to have the right amount of lubrication, because it affects the mounted bearing operating temperature as well. An inadequate amount of grease could lead to higher operating temperatures due to inadequate lubrication film thickness. Excessive grease also will lead to higher operating temperatures due to grease churning, which can cause bearing overheating. It is best to observe the bearing and its temperature and adjust the lubrication as needed. If necessary, use the purge valve or seals that purge to reduce the amount of grease.

NOTE

Please check with the manufacturer of your grease delivery system for specific information.

⚠ WARNING

Failure to observe the following warnings could create a risk of death or serious injury.

Proper maintenance and handling practices are critical. Always follow installation instructions and maintain proper lubrication.

Overheated bearings can ignite explosive atmospheres. Special care must be taken to properly select, install, maintain, and lubricate mounted bearings that are used in or near atmospheres that may contain explosive levels of combustible gases or accumulations of dust such as from grain, coal, or other combustible materials. Consult your equipment designer or supplier for installation and maintenance instructions.

If hammer and bar are used for installation or removal of a part, use a mild steel bar (e.g., 1010 or 1020 grade). Mild steel bars are less likely to cause release of high speed fragments from the hammer or bar or the part being installed or removed.

⚠ CAUTION

Failure to follow these cautions may result in property damage.

Do not use damaged mounted bearings.

RELUBRICATION

Adequate lubrication is an essential element to the mounted bearing life. Use table 49 as a suggested initial point of reference. Relubrication frequency and quantity intervals are best determined through experience for each application based on types of service, which may differ from the suggestions in the table.

When the mounted bearing is not in operation for an extended period of time, grease should be added to prevent corrosion.

Table 49 shows general lubrication suggested starting points only. Please read the entire installation instructions prior to using these tables. Applications should be regularly reviewed and lubrication amounts and intervals modified as needed to ensure the best results.

TABLE 49. RELUBRICATION INTERVALS

Shaft Dia.	Bearing No.	Initial Weight	Relubrication Weight	Relubrication Interval (Hours of Service based on RPM and Temperature deg. F)											
				100 RPM		250 RPM		500 RPM		1000 RPM		2000 RPM		3000 RPM	
				<160°	>160°	<160°	>160°	<160°	>160°	<160°	>160°	<160°	>160°	<160°	>160°
mm in.		**g** oz.	**g** oz.												
35 1 7⁄16, 1 ½	22208	**14.2** 0.5	**2.4** 0.1	2200	1000	1400	700	1000	500	240	120	120	60	40	20
40, 45 1 11⁄16, 1 ¾	22209	**17.0** 0.6	**5.7** 0.2	2000	1000	1200	600	800	400	320	160	160	80	80	40
50 1 15⁄16, 2	22210	**17.0** 0.6	**5.7** 0.2	1600	800	1000	500	640	320	240	120	120	60	60	30
55 2 3⁄16, 2 ¼	22211	**22.7** 0.8	**8.5** 0.3	1200	600	800	400	440	220	160	80	100	50	60	30
60, 65 2 7⁄16, 2 ½	22213	**39.7** 1.4	**11.3** 0.4	1120	560	720	360	360	180	120	60	80	40	40	20
70, 75 2 11⁄16, 2 ¾ 2 15⁄16, 3	22215	**45.4** 1.6	**19.4** 0.7	1040	520	680	340	340	170	100	50	60	30		
80, 85, 90 3 3⁄16, 3 ¼ 3 7⁄16, 3 ½	22218	**82.2** 2.9	**25.5** 0.9	960	480	600	300	300	150	80	40	40	20		
100 3 11⁄16, 3 ¾ 3 15⁄16, 4	22220	**121.9** 4.3	**45.4** 1.6	840	420	520	260	240	120	60	30	20	16		
110, 115 4 7⁄16, 4 ½	22222	**172.9** 6.1	**53.9** 1.9	680	340	440	220	200	100	60	30	20	16		
125, 130 4 15⁄16, 5	22226	**266.5** 9.4	**76.5** 2.7	560	280	360	180	160	80						

DISCLAIMER: Every reasonable effort has been made to ensure the accuracy of the information in this writing, but no liability is accepted for errors, omissions or for any other reason.

HOW TO CONVERT A SOLID-BLOCK MOUNTED BEARING FROM FIXED TO EXPANSION (FLOATING)

Flange Cartridge and Flange Block

- Make a reference mark on the housing and retaining nut.
- Loosen the Nylon-tipped set screw that locks the retaining nut in place.
- Loosen the retaining nut by tapping it with a hammer and punch, rotating the retaining nut counterclockwise one complete revolution.
- Tighten the Nylon-tipped set screw.

NOTE

When converting a solid-block mounted bearing from fixed to expansion, it is imperative that the unit that is going to be converted is correctly oriented. Since the insert in a steel mounted flange bearing is held against either a shoulder or snap ring opposite the housing retaining nut, a flange bearing that has been converted to expansion can only float in the direction of the retaining nut. Based on this, the retaining nut must be on the side of the housing opposite the fixed bearing.

Pillow Block

- Decide the amount and direction of expansion that's needed. If unidirectional expansion is required, follow the directions outlined above for flange bearings on the nut that is on the side you want the expansion.
- If multi-directional expansion is required, follow the directions as outlined above for both nuts on flange mounted bearings.

HOW TO CONVERT A SOLID-BLOCK MOUNTED BEARING FROM EXPANSION (FLOATING) TO FIXED

Flange Cartridge and Flange Block

- Loosen the Nylon-tipped set screw that locks the retaining nut in place.
- Tighten the retaining nut by tapping it with a hammer and punch, rotating the retaining nut clockwise until it's tight. It is not possible to overtighten the retaining nut.
- Tighten the Nylon-tipped set screw.

Pillow Block

- Follow the directions above for flange bearings on both nuts on either side of the housing.

NOTE

When converting a solid-block mounted bearing from expansion to fixed on a mounted bearing, the locking-collar set screws must be released to allow the insert to move both in the housing and on the shaft.

EC SERIES

Please complete the following steps to install Timken EC series solid-block mounted spherical roller bearings.

- Ensure that the shaft is clean, free from nicks and burrs, straight and of proper diameter. See table 50 for recommended shaft tolerances. The mounted bearing should not be mounted on a worn section of the shaft. Using shafts with hardness greater than HRC 45 will reduce the effectiveness of locking devices.
- If using an open-end cover, slide the open-end cover/seal combination into position on the shaft.
- Apply a thin oil film to the shaft and bearing bore.
- Slide the mounted bearing into position on the shaft.
- Install the mounted bearing mounting bolts. Check the mounted bearing alignment. Verify that the mounting surfaces are in the same flat plane to help achieve good alignment. If shimming is required to minimize misalignment, use full shims across the entire housing base where possible (fig. 40). The bolts then need to be alternately torqued securely to their mounting supports.
- Slide the eccentric locking collar along shaft and onto the extended portion of the bearing's inner ring.
- Rotate the eccentric locking collar until it is hand-tight (the direction of rotation does not matter).
- Lock the eccentric locking collar firmly in place by using a spanner wrench or a hammer and drift.
  - When using a hammer and drift, one or two firm, but not too hard, blows will be sufficient due to the shallow eccentric ramp on EC series mounted bearings. Make sure you drive the collar in the same direction in which you hand-tightened it so as to turn it to a tighter position on the bearing's inner ring.
- Tighten the eccentric locking collar set screws alternately as per table 51.

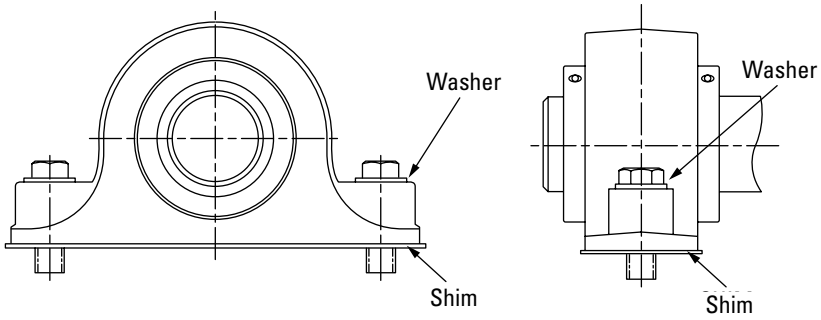

Fig. 40. Use washers and full shims.

If using covers:

- Make sure the mating surface of the cover and retaining nuts are clean and dry.
  - Urethane cover: Slightly roughen the mating surface of the cover, place a 3 mm – 6 mm (1/8 in. – 1/4 in.) bead of polyurethane adhesive sealant on the roughened surface.
  - Steel cover: Place a 3 mm – 6 mm (1/8 in. – 1/4 in.) bead of silicone adhesive sealant on the mating surface of the cover.
- Align the cover mounting holes with the mounting holes on the retaining housing nut (make sure that the grease fitting on the cover is accessible when doing so).
- Apply and tighten the cover mounting hardware.

TABLE 50. RECOMMENDED SHAFT TOLERANCES

Shaft Dia.	Bearing No.	Tolerance
mm in.		**mm** in.
35 1 7/16, 1 1/2	22208	**+0.00/-0.025** +0.00/-0.0010
40, 45 1 11/16, 1 3/4	22209	**+0.00/-0.038** +0.00/-0.0015
50 1 15/16, 2	22210	**+0.00/-0.038** +0.00/-0.0015
55 2 3/16, 2 1/4	22211	**+0.00/-0.038** +0.00/-0.0015
60, 65 2 7/16, 2 1/2	22213	**+0.00/-0.038** +0.00/-0.0015
70, 75 2 11/16, 2 3/4 2 15/16, 3	22215	**+0.00/-0.051** +0.00/-0.0020
80, 85, 90 3 3/16, 3 1/4 3 7/16, 3 1/2	22218	**+0.00/-0.076** +0.00/-0.0030
100 3 11/16, 3 3/4 3 15/16, 4	22220	**+0.00/-0.076** +0.00/-0.0030
110, 115 4 7/16, 4 1/2	22222	**+0.00/-0.127** +0.00/-0.0050
125, 130 4 15/16, 5	22226	**+0.00/-0.127** +0.00/-0.0050
140, 150 5 7/16, 5 1/2 5 15/16, 6	23230	**+0.00/-0.127** +0.00/-0.0050
170, 180 6 7/16, 6 1/2 6 15/16, 7	23234	**+0.00/-0.127** +0.00/-0.0050

TABLE 51. SET SCREW TORQUE VALUES

Shaft Dia.	Bearing No.	Set Screw Size	Torque
mm in.		**mm** in.	**Nm** lbs.
35 1 7/16, 1 1/2	22208	**M8 X 1.25** 5/16 - 24 TPI	**18.6** 165
40, 45 1 11/16, 1 3/4	22209	**M10 X 1.5** 3/8 - 24 TPI	**32.8** 290
50 1 15/16, 2	22210	**M10 X 1.5** 3/8 - 24 TPI	**32.8** 290
55 2 3/16, 2 1/4	22211	**M10 X 1.5** 3/8 - 24 TPI	**32.8** 290
60, 65 2 7/16, 2 1/2	22213	**M12 X 1.75** 7/16 - 20 TPI	**70.1** 620
70, 75 2 11/16, 2 3/4 2 15/16, 3	22215	**M12 X 1.75** 7/16 - 20 TPI	**70.1** 620
80, 85, 90 3 3/16, 3 1/4 3 7/16, 3 1/2	22218	**M12 X 1.75** 7/16 - 20 TPI	**70.1** 620
100 3 11/16, 3 3/4 3 15/16, 4	22220	**M16 X 2** 5/8 - 18 TPI	**149.7** 1325
110, 115 4 7/16, 4 1/2	22222	**M16 X 2** 5/8 - 18 TPI	**149.7** 1325
125, 130 4 15/16, 5	22226	**M16 X 2** 5/8 - 18 TPI	**149.7** 1325
140, 150 5 7/16, 5 1/2 5 15/16, 6	23230	**M16 X 2** 5/8 - 18 TPI	**149.7** 1325
170, 180 6 7/16, 6 1/2 6 15/16, 7	23234	**M16 X 2** 5/8 - 18 TPI	**149.7** 1325

LUBRICATION

This information is to aid in the proper lubrication of Timken solid-block mounted spherical roller bearings for the majority of applications.

Mounted bearings have been factory-prelubricated with an NLGI No. 2 lithium-complex, extreme-pressure synthetic grease that combines the benefits of wide operating temperatures and broad compatibility with varied materials. This grease offers excellent thermal stability through temperatures ranging from -15° C to 120° C (5° F to 248° F). Mounted bearings should be relubricated with this grease or one that is compatible and made for roller bearings. It is vital that the greases used are compatible. Please consult with your Timken engineer for the grease specifications if the use of a grease other than the grease mentioned above is needed.

Normal service is considered as operation in a clean, dry environment at temperatures between -34° C to +82° C (-30° F to +180° F). If service is beyond normal conditions due to speed, temperature, or exposure to moisture, dirt or corrosive chemicals, periodic relubrication may be necessary. For extreme conditions or conditions in which special chemicals are used, consult with your Timken engineer.

After extended storage or periods when the mounted bearing is not in operation, fresh grease should be added.

It's important to have the right amount of lubrication, because it affects the mounted bearing operating temperature as well. An inadequate amount of grease could lead to higher operating temperatures due to inadequate lubrication film thickness. Excessive grease also will lead to higher operating temperatures due to grease churning, which can cause bearing overheating. It is best to observe the bearing and its temperature and adjust the lubrication as needed. If necessary, use the purge valve or seals that purge to reduce the amount of grease.

NOTE

Please check with the manufacturer of your grease delivery system for specific information.

RELUBRICATION

Adequate lubrication is an essential element to the mounted bearing life. Use table 52 as a suggested initial point of reference. Relubrication frequency and quantity intervals are best developed through experience for each application based on types of service, which may differ from the suggestions in the table.

When the mounted bearing is not in operation for an extended period of time, grease should be added to prevent corrosion.

Table 52 shows general lubrication suggested starting points only. Please read the entire installation instructions prior to using these tables. Applications should be regularly reviewed and lubrication amounts and intervals modified as needed to ensure the best results.

⚠ WARNING

Failure to observe the following warnings could create a risk of death or serious injury.

Proper maintenance and handling practices are critical. Always follow installation instructions and maintain proper lubrication.

Overheated bearings can ignite explosive atmospheres. Special care must be taken to properly select, install, maintain, and lubricate mounted bearings that are used in or near atmospheres that may contain explosive levels of combustible gases or accumulations of dust such as from grain, coal, or other combustible materials. Consult your equipment designer or supplier for installation and maintenance instructions.

If hammer and bar are used for installation or removal of a part, use a mild steel bar (e.g., 1010 or 1020 grade). Mild steel bars are less likely to cause release of high speed fragments from the hammer or bar or the part being installed or removed.

⚠ CAUTION

Failure to follow these cautions may result in property damage.

Do not use damaged mounted bearings.

DISCLAIMER

Every reasonable effort has been made to ensure the accuracy of the information in this writing, but no liability is accepted for errors, omissions or for any other reason.

TABLE 52. RELUBRICATION INTERVALS

Shaft Dia.	Bearing No.	Initial Weight	Relubrication Weight	Relubrication Interval (Hours of Service based on RPM and Temperature deg. F)											
				100 RPM		250 RPM		500 RPM		1000 RPM		2000 RPM		3000 RPM	
				<160°	>160°	<160°	>160°	<160°	>160°	<160°	>160°	<160°	>160°	<160°	>160°
mm in.		**g** oz.	**g** oz.												
35 1 7⁄16, 1 ½	22208	**14.2** 0.5	**2.8** 0.1	2200	1000	1400	700	1000	500	240	120	120	60	40	20
40, 45 1 11⁄16, 1 ¾	22209	**17.0** 0.6	**5.7** 0.2	2000	1000	1200	600	800	400	320	160	160	80	80	40
50 1 15⁄16, 2	22210	**17.0** 0.6	**5.7** 0.2	1600	800	1000	500	640	320	240	120	120	60	60	30
55 2 3⁄16, 2 ¼	22211	**22.7** 0.8	**8.5** 0.3	1200	600	800	400	440	220	160	80	100	50	60	30
60, 65 2 7⁄16, 2 ½	22213	**39.7** 1.4	**11.3** 0.4	1120	560	720	360	360	180	120	60	80	40	40	20
70, 75 2 11⁄16, 2 ¾ 2 15⁄16, 3	22215	**45.4** 1.6	**19.8** 0.7	1040	520	680	340	340	170	100	50	60	30		
80, 85, 90 3 3⁄16, 3 ¼ 3 7⁄16, 3 ½	22218	**82.2** 2.9	**25.5** 0.9	960	480	600	300	300	150	80	40	40	20		
100 3 11⁄16, 3 ¾ 3 15⁄16, 4	22220	**121.9** 4.3	**45.4** 1.6	840	420	520	260	240	120	60	30	20	16		
110, 115 4 7⁄16, 4 ½	22222	**172.9** 6.1	**53.9** 1.9	680	340	440	220	200	100	60	30	20	16		
125, 130 4 15⁄16, 5	22226	**266.5** 9.4	**76.5** 2.7	560	280	360	180	160	80						
140, 150 5 7⁄16, 5 ½ 5 15⁄16, 6	23230	**535.8** 18.9	**147.4** 5.2	480	240	320	160	120	68						
170,180 6 7⁄16, 6 ½ 6 15⁄16, 7	23234	**805.1** 28.4	**241.0** 8.5	400	160	240	160	110	60						

HOW TO CONVERT A SOLID-BLOCK MOUNTED BEARING FROM FIXED TO EXPANSION (FLOATING)

Flange Cartridge and Flange Block

- Make a reference mark on the housing and retaining nut.
- Loosen the Nylon-tipped set screw that locks the retaining nut in place.
- Loosen the retaining nut by tapping it with a hammer and punch, rotating the retaining nut counterclockwise one complete revolution.
- Tighten the Nylon-tipped set screw.

NOTE

When converting a solid-block mounted bearing from fixed to expansion, it is imperative that the unit that is going to be converted is correctly oriented. Since the insert in a steel mounted flange bearing is held against either a shoulder or snap ring opposite the housing retaining nut, a flange bearing that has been converted to expansion can only float in the direction of the retaining nut. Based on this, the retaining nut must be on the side of the housing opposite the fixed bearing.

Pillow Block

- Decide the amount and direction of expansion that's needed. If unidirectional expansion is required, follow the directions outlined above for flange bearings on the nut that is on the side you want the expansion.
- If multi-directional expansion is required, follow the directions outlined above for both nuts on flange mounted bearings.

HOW TO CONVERT A SOLID-BLOCK MOUNTED BEARING FROM EXPANSION (FLOATING) TO FIXED

Flange Cartridge and Flange Block

- Loosen the Nylon-tipped set screw that locks the retaining nut in place.
- Tighten the retaining nut by tapping it with a hammer and punch, rotating the retaining nut clockwise until it's tight. It is not possible to overtighten the retaining nut.
- Tighten the Nylon-tipped set screw.

Pillow Block

- Follow the directions above for flange bearings on both nuts on either side of the housing.

NOTE

When converting a solid-block mounted bearing from expansion to fixed on a mounted bearing, the locking collar set screws must be released to allow the insert to move both in the housing and on the shaft.

TA/DV TAA/DAA SERIES

INSTALLATION PROCEDURE

Depending on the locking style selection and the size of the bearing choose one of the three methods for installing your mounted bearing. The single nut tapered adapter and the double nut tapered adapter for shaft sizes 5 in. and below (bearing 22228 and smaller) can be installed by either using the axial drive-up method or the tang count method. When using double nut tapered adapters for shaft sizes 135 mm and larger (bearing 22232 and larger) use the TAA/DAA (large sizes) double nut tapered adapter installation procedure.

AXIAL DRIVE-UP METHOD

- Clean all components of any debris and apply a thin oil film to all mating surfaces to ensure proper seating.
- If using an open-end cover, slide the open-end cover/seal combination into position on the shaft.
- For double nut tapered adapters, back off the withdrawal nut by turning it counterclockwise until it only has one or two threads of engagement holding it onto the adapter.
- Slide the adapter sleeve into position on the shaft, then put the mounted bearing into place on the adapter sleeve.
- Loosely install the mounted bearing mounting bolts. Check the mounted bearing alignment. Verify mounting surfaces are in the same flat plane to help achieve good alignment. If shimming is required to minimize misalignment, use full shims across the entire housing base where possible (fig. 41). Washers should be properly sized to the bolt diameter and should not be an SAE grade, which is smaller.
- Put the lockwasher on and thread the locknut onto the adapter sleeve leaving approximately 6.350 mm (¼ in.) between the lockwasher and the inner ring of the bearing.
- Use a large screwdriver or pry bar to lever the sleeve into position until there is no relative movement between the shaft, the adapter sleeve, and the bearing's inner ring.
- Rotate the locknut until hand-tight.
- Tighten the locknut while using a dial indicator to measure the axial movement of the tapered adapter sleeve relative to the bearing's inner ring (see table 53).
- Bend a tang on the lockwasher into a slot on the locknut to prevent the locknut from loosening.
- For double nut tapered adapters, tighten the withdrawal nut by turning it clockwise until it contacts the inner ring of the bearing, tightening the withdrawal nut until snug. Bend a tang on the withdrawal nut lock washer into a slot on the withdrawal nut to prevent the withdrawal nut from loosening.
- Tighten the mounted bearing mounting bolts.

If using covers:

- Make sure the mating surface of the cover and retaining nuts are clean and dry.
  - Urethane cover: Slightly roughen the mating surface of the cover, place a 3 mm – 6 mm (1/8 in. – 1/4 in.) bead of polyurethane adhesive sealant on the roughened surface.
  - Steel cover: Place a 3 mm – 6 mm (1/8 in. – 1/4 in.) bead of silicone adhesive sealant on the mating surface of the cover.
- Align the cover mounting holes with the mounting holes on the retaining housing nut (make sure that the grease fitting on the cover is accessible when doing so).
- Apply and tighten the cover mounting hardware.

TABLE 53. AXIAL MOVEMENT OF TAPERED ADAPTER SLEEVE RELATIVE TO INNER RING

Shaft Dia.	Bearing No.	Minimum Axial Movement	Maximum Axial Movement
mm in.		**mm** in.	**mm** in.
40 1 7⁄16, 1 ½	22209	**0.38** 0.015	**0.46** 0.018
45 1 11⁄16, 1 ¾	22210	**0.38** 0.015	**0.46** 0.018
50 1 15⁄16, 2	22211	**0.46** 0.018	**0.56** 0.022
55 –	22212	**0.46** 0.018	**0.56** 0.022
60 2 3⁄16, 2 ¼	22213	**0.46** 0.018	**0.56** 0.022
65 2 7⁄16, 2 ½	22215	**0.64** 0.025	**0.76** 0.030
70 2 11⁄16, 2 ¾	22216	**0.64** 0.025	**0.76** 0.030
75 2 15⁄16, 3	22217	**0.69** 0.027	**0.97** 0.038
80 3 3⁄16, 3 ¼	22218	**0.69** 0.027	**0.97** 0.038
85 –	22219	**0.69** 0.027	0.97 0.038
90 3 7⁄16, 3 ½	22220	**0.69** 0.027	**0.97** 0.038
100 3 15⁄16, 4	22222	**0.76** 0.030	**1.07** 0.042
110 4 3⁄16, 4 ¼	22224	**0.76** 0.030	**1.07** 0.042
115 4 7⁄16, 4 ½	22226	**0.89** 0.035	**1.27** 0.050
125 4 15⁄16, 5	22228	**0.89** 0.035	**1.27** 0.050

TANG COUNTING METHOD

- Clean all components of any debris and apply a thin oil film to all mating surfaces to ensure proper seating.
- If using an open-end cover, slide the open-end cover/seal combination into position on the shaft.
- For double nut tapered adapters, back off the withdrawal nut by turning it counterclockwise until it only has one or two threads of engagement holding it onto the adapter.
- Slide the adapter sleeve into the correct position on the shaft, then put the mounted bearing into place on the adapter sleeve.
- Loosely install the mounted bearing mounting bolts. Check the mounted bearing alignment. Verify mounting surfaces are in the same flat plane to help achieve good alignment. If shimming is required to minimize misalignment, use full shims across the entire housing base where possible (fig. 41). Washers should be properly sized to the bolt diameter and should not be an SAE grade, which is smaller.
- Put the lockwasher on and thread the locknut onto the adapter sleeve leaving approximately 6.350 mm (¼ in). between the lockwasher and the inner ring of the bearing.
- Use a large screwdriver or pry bar to lever the sleeve into position until there is no relative movement between the shaft, the adapter sleeve and the bearing's inner ring.
- Rotate the locknut until hand-tight.
- Note which tang is in line with one slot on the locknut.
- Tighten the locknut until the slot on the locknut passes the number of tangs shown in table 54.
- Bend a tang on the lockwasher into a slot on the locknut to prevent the locknut from loosening.
- For double nut tapered adapters, tighten the withdrawal nut by turning it clockwise until it contacts the inner ring of the bearing, tightening the withdrawal nut until snug. Bend a tang on the withdrawal nut lock washer into a slot on the withdrawal nut to prevent the withdrawal nut from loosening.
- Tighten the mounted bearing mounting bolts.

If using covers:

- Make sure the mating surface of the cover and retaining nuts are clean and dry.
  - Urethane cover: Slightly roughen the mating surface of the cover, place a 3 mm – 6 mm (1/8 in. – 1/4 in.) bead of polyurethane adhesive sealant on the roughened surface.
  - Steel cover: Place a 3 mm – 6 mm (⅛ in. – ¼ in.) bead of silicone adhesive sealant on the mating surface of the cover.
- Align the cover mounting holes with the mounting holes on the retaining housing nut (make sure that the grease fitting on the cover is accessible when doing so).
- Apply and tighten the cover mounting hardware.

TABLE 54. NUMBER OF TANGS TO LOCKING

Shaft Dia.	Bearing No.	Number of Tangs
mm in.		
40 1 7⁄16, 1 ½	22209	3-4
45 1 11⁄16, 1 ¾	22210	3-4
50 1 15⁄16, 2	22211	4-5
55 –	22212	4-5
60 2 3⁄16, 2 ¼	22213	4-5
65 2 7⁄16, 2 ½	22215	5-6
70 2 11⁄16, 2 ¾	22216	5-6
75 2 15⁄16, 3	22217	8-9
80 3 3⁄16, 3 ¼	22218	8-9
85 –	22219	8-9
90 3 7⁄16, 3 ½	22220	8-9
100 3 15⁄16, 4	22222	10-11
110 4 3⁄16, 4 ¼	22224	10-11
115 4 7⁄16, 4 ½	22226	10-11
125 4 15⁄16, 5	22228	10-11

TAA/DAA SERIES (LARGE SERIES) INSTALLATION PROCEDURE

These instructions are for large sizes of the TAA/DAA series double nut tapered adapter, to be used for shaft sizes 130 mm and up (bearing sizes 22232 and larger).

- Clean all components of any debris and apply a thin oil film to all mating surfaces to ensure proper seating.
- If using an open-end cover, slide the open-end cover/seal combination into position on the shaft.
- Check that the withdrawal nut settings are appropriate for the application shaft size. The axial measurement of the withdrawal nut of the tapered adapter is preset from the factory assuming the shaft is to commercial grade tolerances. If the shaft is smaller or larger than commercial grade tolerances, calculate the amount of rotation to adjust the withdrawal nut from the values in table 55 under the withdrawal nut adjustment column (values listed are based on ¼ turn of the withdrawal nut). For smaller than commercial tolerance shaft, turn the withdrawal nut counter-clockwise. For larger than commercial tolerance shaft, turn the withdrawal nut clockwise when looking at front face of the nut. The lockwasher or lock plate will need to be disengaged before rotating the withdrawal nut.
  - If the customer feels the adapter has changed from the pre-set value that has been provided, use the tang counting method up to size 40, axial drive up method, or reach out to a local Timken engineer.
- Slide the adapter sleeve and withdrawal nut into the correct position on the shaft, then put the mounted bearing into place on the adapter sleeve.
- Loosely install the mounted bearing mounting bolts. Check the mounted bearing alignment. Verify mounting surfaces are in the same flat plane to help achieve good alignment. If shimming is required to minimize misalignment, use full shims across the entire housing base where possible (fig. 41). Washers should be properly sized to the bolt diameter and should not be an SAE grade, which is smaller.
- Rotate front locknut by hand until it makes contact with inner ring. Using a wrench, further tighten the front locknut until the inner ring makes contact with the inner face of the withdrawal nut. A hydraulic nut also may be used to do this; however, the front locknut must first be removed, then the bearing tightened with a hydraulic nut.
- For bearing sizes 23132K to 23140K, secure the front locknut by bending a tang on the lockwasher into the closest notch on the locknut. For bearing sizes 23144K and larger, secure the front locknut by fixing the lockplate into the closest notch on the locknut.
- Tighten the mounted bearing mounting bolts.

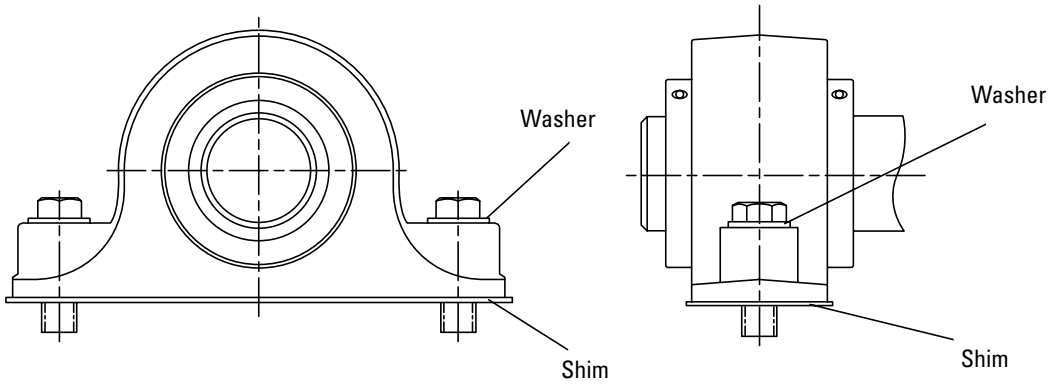

Fig. 41. Use washers and full shims.

CROSS-SECTIONAL VIEW OF BEARINGS

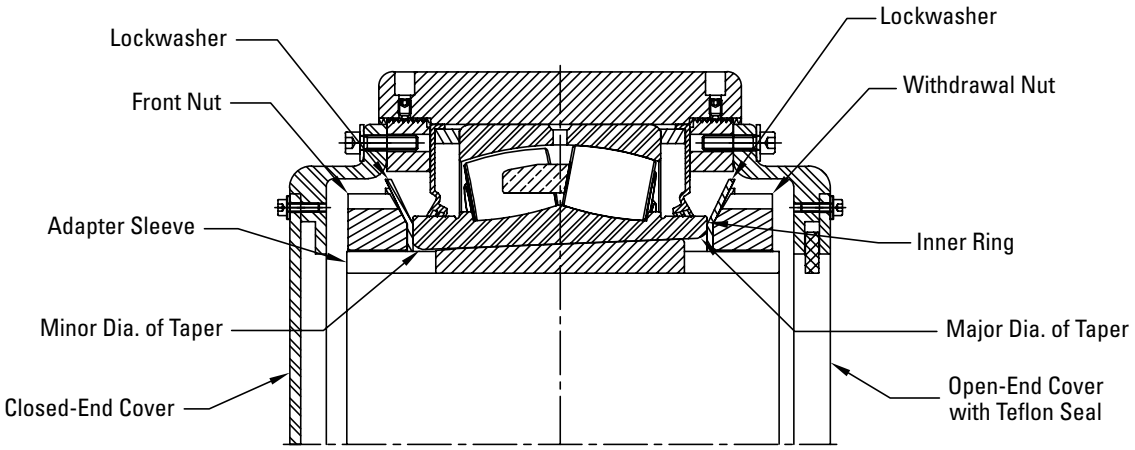

Fig. 42. Cross-sectional view of bearing sizes 23132K to 23140K.

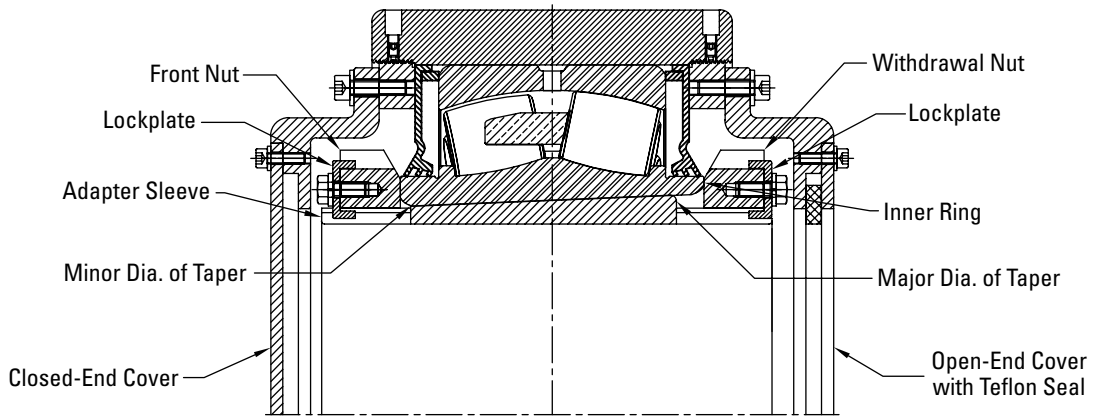

Fig. 43. Cross-sectional view of bearing sizes 23144K and larger.

TABLE 55. INSTALLATION DATA

Shaft Diameter	Bearing Part No.	Max. Speed (O-Seals)	Adapter Thread Spec.	Recommended Shaft Tolerance	Withdrawal Nut Initial Setting	Withdrawal nut adjustment based on a ¼ turn[1]
mm in.		**RPM**		**mm** in.	**mm** in.	**mm** in.
135, 140 5 3/8, 5 7/16, 5 1/2	23132K	500	M160 x 3	**+0.00 / -0.125** +0.000 / -0.005	**5.17** 0.203	**0.063** 0.0025
150 5 13/16, 5 7/8, 5 15/16, 6	23134K	470	M170 x 3	**+0.00 / -0.125** +0.000 / -0.005	**-1.05** -0.042	**0.063** 0.0025
160 6 5/16, 6 3/8, 6 7/16, 6 1/2	23136K	430	M180 x 3	**+0.00 / -0.125** +0.000 / -0.005	**-0.31** -0.012	**0.063** 0.0025
170 6 13/16, 6 7/8, 6 15/16, 7	23138K	400	M190 x 3	**+0.00 / -0.125** +0.000 / -0.005	**-1.37** -0.054	**0.063** 0.0025
180 7 1/8, 7 13/16, 7 1/4	23140K	400	M200 x 3	**+0.00 / -0.125** +0.000 / -0.005	**-1.33** -0.052	**0.063** 0.0025
200 7 13/16, 7 7/8, 7 15/16, 8	23144K	330	Tr220 x 4	**+0.00 / -0.125** +0.000 / -0.005	**3.07** 0.121	**0.083** 0.0033
220 8 7/16, 8 1/2, 8 15/16, 9	23148K	310	Tr240 x 4	**+0.00 / -0.152** +0.000 / -0.006	**2.71** 0.107	**0.083** 0.0033
240 9 7/16, 9 1/2	23152K	250	Tr260 x 4	**+0.00 / -0.152** +0.000 / -0.006	**2.65** 0.104	**0.083** 0.0033
260 9 15/16, 10, 10 7/16, 10 1/2	23156K	240	Tr280 x 4	**+0.00 / -0.178** +0.000 / -0.007	**2.58** 0.101	**0.083** 0.0033
280 10 15/16, 11	23160K	210	Tr300 x 4	**+0.00 / -0.178** +0.000 / -0.007	**0.48** 0.019	**0.083** 0.0033
300 11 7/16, 11 1/2, 11 15/16, 12	23164K	190	Tr320 x 5	**+0.00 / -0.178** +0.000 / -0.007	**0.30** 0.012	**0.104** 0.0041
320 12 7/16, 12 1/2	23168K	180	Tr340 x 5	**+0.00 / -0.203** +0.000 / -0.008	**0.34** 0.013	**0.104** 0.0041
340 12 15/16, 13, 13 7/16, 13 1/2	23172K	170	Tr360 x 5	**+0.00 / -0.203** +0.000 / -0.008	**0.09** 0.003	**0.104** 0.0041
360 13 15/16, 14	23176K	160	Tr380 x 5	**+0.00 / -0.203** +0.000 / -0.008	**0.00** 0.00	**0.104** 0.0041
380 14 15/16, 15	23180K	150	Tr400 x 5	**+0.00 / -0.203** +0.000 / -0.008	**0.00** 0.00	**0.104** 0.0041

[1] Calculation would be: Adjustment turns = (0.25 x (preset shaft size – measured shaft size)) / Withdrawal nut adjustment value from table.
For example, if the shaft is undersized by 0.001 in., you would back off the withdrawal nut by 1/10 of a turn (or 36 degrees), as shown by the following calculation.
If you have a 5 7/16 in. shaft that is undersized by 0.001 in. (0.25 x (5.4375 in. – 5.4365 in.)) / 0.0025 in.) = 0.1 turns = 1/10 of a turn.
Or in degrees, this would be 360 degrees/10 = 36 degrees.

COVER INSTALLATION

- Make sure the mating surface of the cover and retaining nuts are clean and dry.
- Steel cover: Place a 3-6 mm (1/8 in. – 1/4 in.) bead of silicone adhesive sealant on the mating surface of the cover.
- Align the cover mounting holes with the mounting holes on the retaining housing nut (make sure that the grease fitting on the cover is accessible when doing so).
- Apply and tighten the cover mounting hardware.

TAA/DAA BEARING REMOVAL

- Remove covers, if applicable, by removing cover hardware and disengaging the cover from the mounted bearing retaining nut.
- Disengage locknut retainer on lockwasher on both front and withdrawal locknuts.
- Remove front locknut.
- Tighten withdrawal nut to disengage bearing from adapter sleeve.
- Slide off bearing, then slide off adapter sleeve.

RELUBRICATION

This information is to aid in the proper lubrication of Timken solid-block mounted spherical roller bearings for the majority of applications.

Mounted bearings have been factory-prelubricated with an NLGI No. 2 lithium-complex, extreme-pressure synthetic grease that combines the benefits of wide operating temperatures and broad compatibility with varied materials. This grease offers excellent thermal stability through temperatures ranging from -15° C to 120° C (5° F to 248° F). Mounted bearings should be relubricated with this grease or one that is compatible and made for roller bearings. It is vital that the greases used are compatible with the factory installed grease. Please consult with your Timken engineer for the grease specifications if the use of a grease other than the grease mentioned above is needed.

Normal service is considered as operation in a clean, dry environment at temperatures between -34° C to +82° C (-30° F to +180° F). If service is beyond normal conditions due to speed, temperature or exposure to moisture, dirt or corrosive chemicals, periodic relubrication may be necessary. For extreme conditions or conditions in which special chemicals are used, consult with your Timken engineer.

After extended storage or periods when the mounted bearing is not in operation, fresh grease should be added.

It's important to have the right amount of lubrication because it affects the mounted bearing operating temperature as well. An inadequate amount of grease could lead to higher operating temperatures due to inadequate lubrication film thickness. Excessive grease will lead to higher operating temperatures due to grease churning, which can cause bearing overheating. It is best to observe the bearing and its temperature and adjust the lubrication as needed. If necessary, use the purge valve or seals that purge to reduce the amount of grease.

NOTE

Please check with the manufacturer of your grease delivery system for specific information.

Adequate lubrication is an essential element to the mounted bearing life. Use table 56 as a suggested initial point of reference. Relubrication frequency and quantity intervals are best determined through experience for each application based on types of service, which may differ from the suggestions in the table.

When the mounted bearing is not in operation for an extended period of time, grease should be added to prevent corrosion.

Table 56 shows general lubrication suggested starting points only. Please read the entire installation instructions prior to using these tables. Applications should be regularly reviewed and lubrication amounts and intervals modified as needed to ensure the best results.

TABLE 56. RELUBRICATION INTERVALS

Shaft Dia.	Bearing Part No.	Initial Weight	Relubrication Weight	Relubrication Interval (Hours of Service based on RPM and Temperature deg. F)											
				100 RPM		250 RPM		500 RPM		1000 RPM		2000 RPM		3000 RPM	
				<160°	>160°	<160°	>160°	<160°	>160°	<160°	>160°	<160°	>160°	<160°	>160°
mm in.		**g** oz.	**g** oz.												
40 1 7⁄16, 1 ½	22209	**14.2** 0.5	**5.7** 0.2	2000	1000	1200	600	800	400	320	160	160	80	80	40
45 1 11⁄16, 1 ¾	22210	**14.2** 0.5	**5.7** 0.7	1600	800	1000	500	640	320	240	120	120	60	60	30
50 1 15⁄16, 2	22211	**19.8** 0.7	**8.5** 0.3	1200	600	800	400	440	220	160	80	100	50	60	30
55 –	22212	**25.5** 0.9	**8.5** 0.3	1150	580	750	380	400	200	140	70	90	50	50	20
60 2 3⁄16, 2 ¼	22213	**34.0** 1.2	**11.3** 0.4	1120	560	720	360	360	180	120	60	80	40	40	20
65 2 7⁄16, 2 ½	22215	**39.7** 1.4	**19.8** 0.7	1040	520	680	340	340	170	100	50	60	30		
70 2 11⁄16, 2 ¾	22216	**48.2** 1.7	**19.8** 0.7	1040	520	680	340	340	170	10	50	60	30		
75 2 15⁄16, 3	22217	**59.5** 2.1	**25.5** 0.9	1000	500	640	320	320	160	100	50	60	30		
80 3 3⁄16, 3 ¼	22218	**73.7** 2.6	**25.5** 0.9	960	480	600	300	300	150	80	40	40	20		
85 –	22219	**90.7** 3.2	**25.5** 0.9	960	480	600	300	300	150	80	40	40	20		
90 3 7⁄16, 3 ½	22220	**107.7** 3.8	**45.4** 1.6	840	420	520	260	240	120	60	30				
100 3 15⁄16, 4	22222	**153.1** 5.4	**53.9** 1.9	680	340	440	220	200	100	60	30				
110 4 3⁄16, 4 ¼	22224	**198.4** 7.0	**68.0** 2.4	640	320	400	200	180	90	50	25				
115 4 7⁄16, 4 ½	22226	**238.1** 8.4	**85.0** 3.0	600	300	360	180	160	80	40	20				
125 4 15⁄16, 5	22228	**294.8** 10.4	**99.2** 3.5	520	260	340	170	140	75						
135 5 3⁄16, 5 ¼	23130	**428.0** 15.1	**108** 3.8	500	250	330	165	130	65						
140 5 3⁄8, 5 7⁄16, 5 ½	23132	**450.8** 15.9	**116** 4.1	480	240	320	160	120	60						
150 5 13⁄16, 5 7⁄8, 5 15⁄16, 6	23134	**499.0** 17.6	**122** 4.3	420	200	280	140	110	60						
160 6 3⁄16, 6 3⁄8, 6 7⁄16, 6 ½	23136	**629.4** 22.2	**145** 5.1	400	180	240	120								
170 6 13⁄16, 6 7⁄8, 6 15⁄16, 7	23138	**782.4** 27.6	**167** 5.9	380	160	200	110								
180 7 1⁄8, 7 3⁄16, 7 ¼	23140	**921.4** 32.5	**190** 6.7	350	150	150	90								
200 7 13⁄16, 7 7⁄8, 7 15⁄16, 8	23144	**1179.3** 41.6	**221** 7.8	320	140	110	60								
220 8 7⁄16, 8 ½, 8 15⁄16, 9	23148	**1434.5** 50.6	**255** 9.0	290	130	85	45								
240 9 7⁄16, 9 ½	23152	**1961.8** 69.2	**318** 11.2	260	120	60	30								
260 9 15⁄16, 10, 10 7⁄16, 10 ½	23156	**2109.2** 74.4	**335** 11.8	230	110										
280 10 15⁄16, 11	23160	**2772.6** 97.8	**400** 14.1	200	100										
300 11 7⁄16, 11 ½, 11 15⁄16, 12	23164	**3574.9** 126.1	**476** 16.8	170	90										
320 12 7⁄16, 12 ½	23168	**4371.5** 154.2	**550** 19.4	140	80										
340 12 15⁄16, 13, 13 7⁄16, 13 ½	23172	**4465.0** 157.5	**576** 20.3	110	60										
360 13 15⁄16, 14	23176	**4924.3** 173.7	**601** 21.2	85	45										
380 14 15⁄16, 15	23180	**5525.3** 194.9	**649** 22.9	60	30										

HOW TO CONVERT A SOLID-BLOCK MOUNTED BEARING FROM FIXED TO EXPANSION (FLOATING)

Flange Cartridge and Flange Block

- Make a reference mark on the housing and retaining nut.
- Loosen the Teflon-tipped set screw that locks the retaining nut in place.
- Loosen the retaining nut by tapping it with a hammer and punch, rotating the retaining nut counterclockwise one complete revolution.
- Tighten the Teflon-tipped set screw.

NOTE

When converting a solid-block mounted bearing from fixed to expansion, it is imperative that the unit that is going to be converted is correctly oriented. Since the insert in a steel mounted flange bearing is held against either a shoulder or snap ring opposite the housing retaining nut, a flange bearing that has been converted to expansion can only float in the direction of the retaining nut. Based on this, the retaining nut must be on the side of the housing opposite the fixed bearing.

Pillow Block

- Decide the amount and direction of expansion that's needed. If unidirectional expansion is required, follow the directions outlined above for flange bearings on the nut that is on the side you want the expansion.
- If multi-directional expansion is required, follow the directions above for both nuts on flange mounted bearings.

HOW TO CONVERT A SOLID-BLOCK MOUNTED BEARING FROM EXPANSION (FLOATING) TO FIXED

Flange Cartridge and Flange Block

- Loosen the Teflon-tipped set screw that locks the retaining nut in place.
- Tighten the retaining nut by tapping it with a hammer and punch, rotating the retaining nut clockwise until tight. It is not possible to overtighten the retaining nut.
- Tighten the Teflon-tipped set screw.

Pillow Block

- Follow the directions above for flange bearings on both nuts on either side of the housing.

NOTE

When converting a solid-block mounted bearing from expansion to fixed on a mounted bearing, the locking-collar set screws must be released to allow the insert to move both in the housing and on the shaft.

⚠ WARNING

Failure to observe the following warnings could create a risk of death or serious injury.

Proper maintenance and handling practices are critical. Always follow installation instructions and maintain proper lubrication.

Overheated bearings can ignite explosive atmospheres. Special care must be taken to properly select, install, maintain, and lubricate mounted bearings that are used in or near atmospheres that may contain explosive levels of combustible gases or accumulations of dust such as from grain, coal, or other combustible materials. Consult your equipment designer or supplier for installation and maintenance instructions.

If hammer and bar are used for installation or removal of a part, use a mild steel bar (e.g., 1010 or 1020 grade). Mild steel bars are less likely to cause release of high speed fragments from the hammer or bar or the part being installed or removed.

⚠ CAUTION

Failure to follow these cautions may result in property damage.

Do not use damaged mounted bearings.

DISCLAIMER

Every reasonable effort has been made to ensure the accuracy of the information in this writing, but no liability is accepted for errors, omissions or for any other reason.

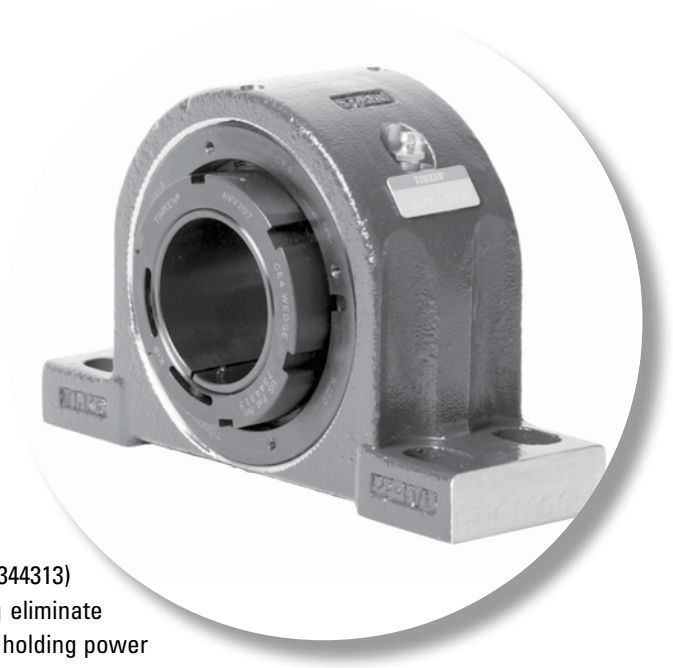

V-LOCK SERIES

The V-Lock locking mechanism (U.S. Pat. No. 7344313) evenly distributes force on the shaft, helping eliminate fretting corrosion. V-Lock provides maximum holding power and prevents overtightening.

The following topics are covered within this section:

Introduction. 90
QVP and QVVP Two-Bolt Pillow Blocks 92
QVPL and QVVPL Two-Bolt Pillow Blocks 94
QVPA and QVVPA SAF Two-Bolt Pillow Blocks 96
QVPN and QVVPN SN-Style Two-Bolt Pillow Blocks 98
QVSN and QVVSN SN-Style Two-Bolt Pillow Blocks 100
QVPKT and QVVPKT 9000 Series Two-Bolt Pillow Blocks . . .102
QVPXT and QVVPXT 5000 Series Two-Bolt Pillow Blocks . . .103
QVPF and QVVPF Four-Bolt Pillow Blocks. 104
QVPR and QVVPR Four-Bolt Pillow Blocks 106
QVPX and QVVPX 5000 Series Four-Bolt Pillow Blocks 107
QVPG and QVVPG SN-Style Four-Bolt Pillow Blocks 109
QVPH and QVVPH SAF-Style Four-Bolt Pillow Blocks. 111
QVPK and QVVPK 9000 Series Four-Bolt Pillow Blocks 113
QVF and QVVF Square Flange Blocks 115
QVFB and QVVFB Square Flange Blocks 117
QVFC and QVVFC Piloted Flange Cartridges 119
QVFL and QVVFL Flange Blocks. 121
QVFX and QVVFX 5000 Series Square Flange Blocks 123
QVFK and QVVFK 9000 Series Square Flange Blocks 125
QVFNL Series Flange Blocks 127
QVFY and QVVFY Round Flange Blocks 128
QVC and QVVC Piloted Flange Cartridges 130
QVCW and QVVCW Piloted Flange Cartridges 132
QVMC and QVVMC Cartridge Blocks 134
QVVTU Take-Up Blocks. 136

V-LOCK SERIES

The V-Lock series is specifically designed to address common solid-block mounted spherical roller bearing problems:

- Reliable mechanical withdrawal
- Preset spherical inner ring radial internal clearances (feeler gages are not required)
- Quick installation (typically 10 minutes or less)
- Highest shaft-holding power
- Works well in high-speed applications where shaft centering is an issue



Fig. 44. V-Lock series insert.

YOU HAVE CHOICES

For the V-Lock series, you can select either single-nut or double-nut versions and choose from many seal configurations and housing styles, which are shown on page 15.

HOUSINGS

- Two-bolt pillow blocks
- Four-bolt pillow blocks
- Flange blocks
- Piloted flange cartridges
- Cartridge blocks
- Take-up blocks

SEALS

- Labyrinth: DuPont™ Teflon® (T)
- Triple-lip: nitrile rubber (M), urethane (O) and Viton® (N)
- Double-lip: nitrile rubber (B) and Viton (C)
- Steel and urethane closed-end covers (CS)
- Steel and urethane open-end covers (CV) with:
  - DuPont Teflon (T)
  - Triple-lip seal (DR)
  - V-ring seal (VR)

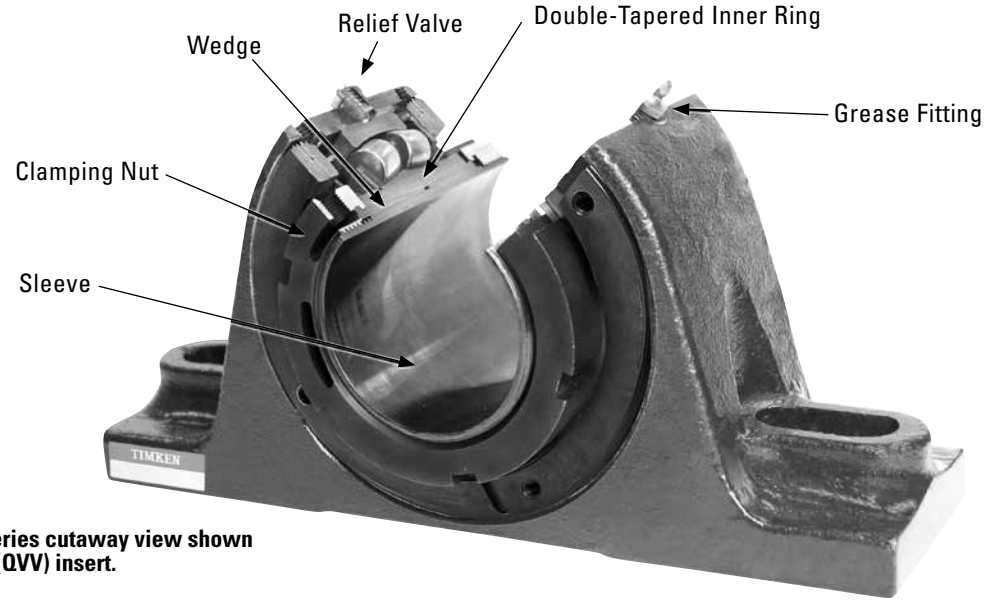

Fig. 45. V-Lock series cutaway view shown with double-nut (QVV) insert.

V-LOCK SERIES WRENCH

New V-Lock series wrenches make installation easy; the wrenches are specifically designed for the V-Lock adapter sleeves, providing three or four points of contact and maximum wrench engagement versus traditional spanner wrench designs. Made from tough high alloy steel for long service life. Eight wrenches are all you need for the 36 different bore sizes.



Fig. 46. V-Lock series wrench.

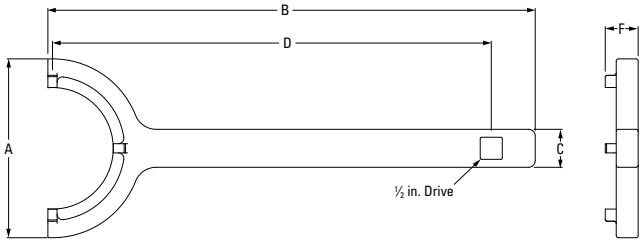

TABLE 57. V-LOCK SERIES WRENCH DIMENSIONS

Part #	Shaft Dia.	A	B	C	D	F	Wt.
	mm in.	**mm** in.	**mm** in.	**mm** in.	**mm** in.	**mm** in.	**kg** lbs.
AVWR11	1 15/16 in. 2 in. **50 mm**	**103.5** 4.07	**282.1** 11.10	**22.0** 0.87	**254.0** 10.00	**19.1** 0.75	**0.67** 1.5
AVWR12-13	2 3/16 in. 2 1/4 in. **55 mm**	**107.0** 4.21	**307.6** 12.11	**22.0** 0.87	**279.5** 11.00	**19.1** 0.75	**0.74** 1.6
AVWR14-15	**60 mm** 2 7/16 in. 2 1/2 in. **65 mm**	**126.0** 4.95	**358.2** 14.10	**22.0** 0.87	**330.2** 13.00	**19.1** 0.75	**0.92** 2.0
AVWR16-17	2 11/16 in. 2 3/4 in. **70 mm** 2 15/16 in. 3 in. **75 mm**	**138.0** 5.43	**383.5** 15.10	**22.0** 0.87	**355.5** 14.00	**19.1** 0.75	**0.97** 2.1
AVWR19-20	3 3/16 in. 3 1/4 in. **80 mm** **85 mm** 3 7/16 in. 3 1/2 in. **90 mm**	**161.0** 6.34	**408.9** 16.10	**33.0** 1.30	**380.9** 15.00	**21.6** 0.85	**1.45** 3.2
AVWR22	3 11/16 in. 3 3/4 in. **100 mm** 3 15/16 in. 4 in.	**176.0** 6.93	**434.3** 17.10	**33.0** 1.30	**406.3** 16.00	**29.2** 1.15	**2.37** 5.2
AVWR26	**110 mm** 4 7/16 in. 4 1/2 in. **115 mm**	**216.0** 8.50	**485.3** 19.11	**33.0** 1.30	**457.3** 18.00	**29.2** 1.15	**2.80** 6.2
AVWR28	**125 mm** 4 15/16 in. 5 in. **130 mm**	**232.0** 9.13	**536.0** 21.10	**33.0** 1.30	**508.0** 20.00	**29.2** 1.15	**2.97** 6.6

QVP AND QVVP TWO-BOLT PILLOW BLOCKS – STRAIGHT BORE EQUIVALENT

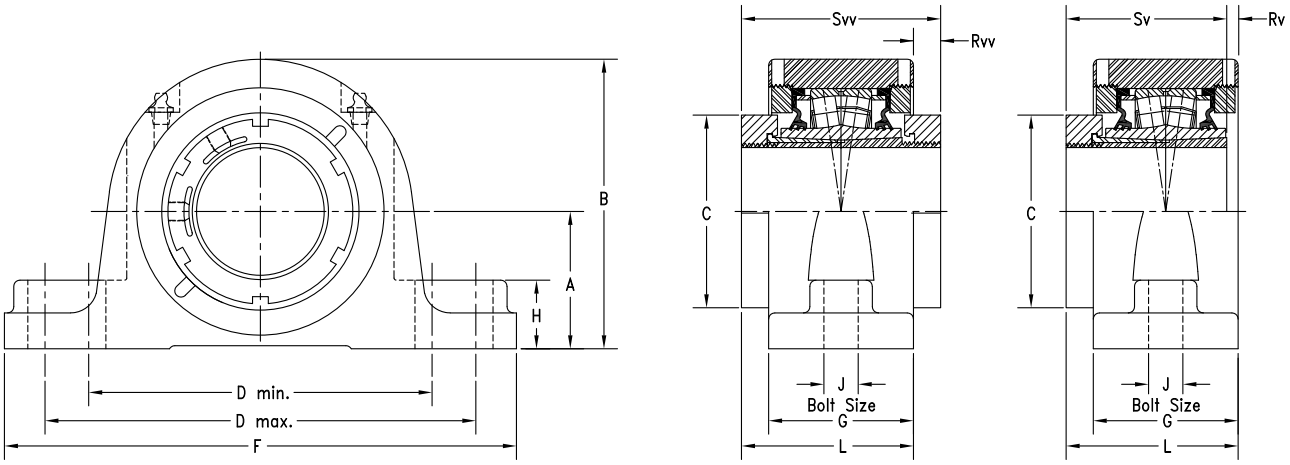

Bearing Part No.[1][2]	Shaft Dia.	Bearing No.	A	B	C	D min.	D max.	F	G	H	J	L	Rv[1]	Rvv	Sv[1]	Svv	Wt.
	mm in.		**mm** in.	**mm** in.	**mm** in.	**mm** in.	**mm** in.	**mm** in.	**mm** in.	**mm** in.	**mm** in.	**mm** in.	**mm** in.	**mm** in.	**mm** in.	**mm** in.	**kg** lbs.
QVP11V115S QVVP11V115S	1 15/16 in.	22211	**57.2** 2.25	**122.2** 4.81	**75.9** 2.99	**152.4** 6.00	**181.1** 7.13	**225.6** 8.88	**62.0** 2.44	**31.8** 1.25	**16** 5/8	**82.0** 3.23	**2.2** 0.09	**20.1** 0.79	**79.8** 3.14	**102.1** 4.02	**6.4** 14
QVP11V200S QVVP11V200S	2 in.																
QVP11V050S QVVP11V050S	**50 mm**																
QVP12V203S QVVP12V203S	2 3/16 in.	22212	**63.5** 2.50	**133.4** 5.25	**80.3** 3.16	**165.1** 6.50	**200.2** 7.88	**244.6** 9.63	**66.8** 2.63	**31.8** 1.25	**16** 5/8	**84.6** 3.33	**4.7** 0.18	**17.8** 0.70	**79.8** 3.14	**102.1** 4.02	**7.7** 17
QVP12V204S QVVP12V204S	2 1/4 in.																
QVP12V055S QVVP12V055S	**55 mm**																
QVP14V060S QVVP14V060S	**60 mm**	22214	**69.9** 2.75	**147.3** 5.80	**94.0** 3.70	**174.8** 6.88	**219.2** 8.63	**260.4** 10.25	**73.7** 2.90	**35.1** 1.38	**16** 5/8	**88.9** 3.50	**7.8** 0.31	**15.2** 0.60	**81.0** 3.19	**103.9** 4.09	**10.0** 22
QVP14V207S QVVP14V207S	2 7/16 in.																
QVP14V208S QVVP14V208S	2 1/2 in.																
QVP14V065S QVVP14V065S	**65 mm**																
QVP16V211S QVVP16V211S	2 11/16 in.	22216	**79.5** 3.13	**164.3** 6.47	**106.4** 4.19	**200.2** 7.88	**244.6** 9.63	**295.4** 11.63	**76.2** 3.00	**35.1** 1.38	**20** 3/4	**91.2** 3.59	**7.6** 0.30	**15.0** 0.59	**83.6** 3.29	**106.2** 4.18	**12.7** 28
QVP16V212S QVVP16V212S	2 3/4 in.																
QVP16V070S QVVP16V070S	**70 mm**																
QVP16V215S QVVP16V215S	2 15/16 in.																
QVP16V300S QVVP16V300S	3 in.																
QVP16V075S QVVP16V075S	**75 mm**																

[1]Bearing part numbers use QV to designate single-nut units (uses Rv and Sv dimensions) and QVV to designate double-nut units (uses Rvv and Svv dimensions).
[2]Single-nut (QV) part number shown. Double-nut (QVV) version available upon request.

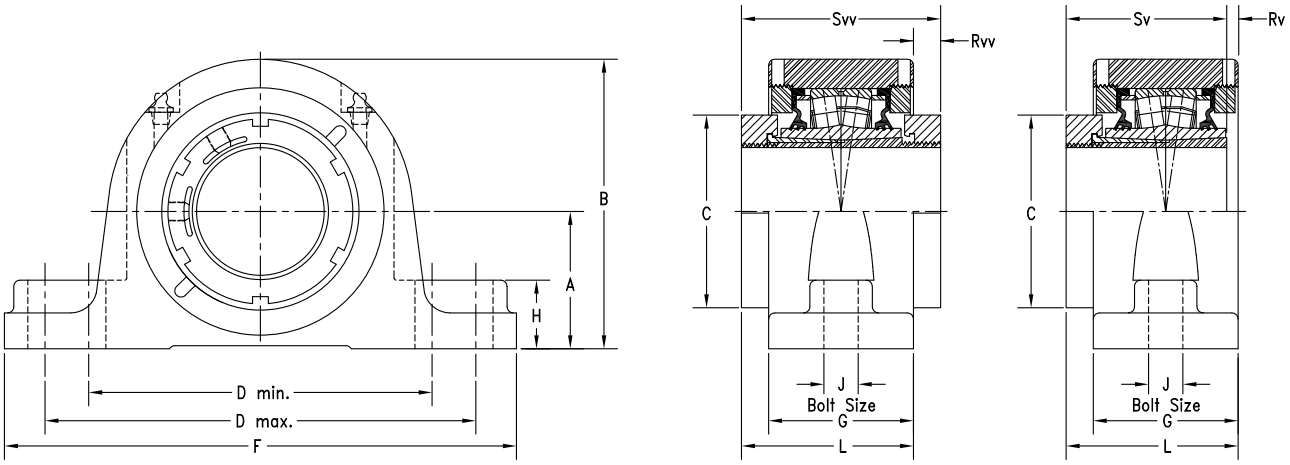

Bearing Part No.[1][2]	Shaft Dia.	Bearing No.	A	B	C	D min.	D max.	F	G	H	J	L	Rv[1]	Rvv	Sv[1]	Svv	Wt.
	mm in.		**mm** in.	**mm** in.	**mm** in.	**mm** in.	**mm** in.	**mm** in.	**mm** in.	**mm** in.	**mm** in.	**mm** in.	**mm** in.	**mm** in.	**mm** in.	**mm** in.	**kg** lbs.
QVP19V303S QVVP19V303S	3 3⁄16 in.	22219	**95.3** 3.75	**195.3** 7.69	**124.5** 4.90	**238.3** 9.38	**285.8** 11.25	**342.9** 13.50	**86.6** 3.41	**47.8** 1.88	**24** 7⁄8	**102.1** 4.02	**8.4** 0.33	**15.5** 0.61	**93.7** 3.69	**117.6** 4.63	**20.4** 45
QVP19V304S QVVP19V304S	3 1⁄4 in.																
QVP19V080S QVVP19V080S	**80 mm**																
QVP19V085S QVVP19V085S	**85 mm**																
QVP19V307S QVVP19V307S	3 7⁄16 in.																
QVP19V308S QVVP19V308S	3 1⁄2 in.																
QVP19V090S QVVP19V090S	**90 mm**																
QVP19V311S QVVP19V311S	3 11⁄16 in.	22222	**104.9** 4.13	**219.7** 8.65	**139.7** 5.50	**255.0** 10.04	**320.0** 12.60	**362.0** 14.25	**102.6** 4.04	**50.8** 2.00	**24** 1	**116.6** 4.59	**11.5** 0.45	**14.0** 0.55	**104.9** 4.13	**130.3** 5.13	**26.8** 59
QVP19V312S QVVP19V312S	3 3⁄4 in.																
QVP19V100S QVVP19V100S	**100 mm**																
QVP19V315S QVVP19V315S	3 15⁄16 in.																
QVP19V400S QVVP19V400S	4 in.																

[1]Bearing part numbers use QV to designate single-nut units (uses Rv and Sv dimensions) and QVV to designate double-nut units (uses Rvv and Svv dimensions).
[2]Single-nut (QV) part number shown. Double-nut (QVV) version available upon request.

QVPL AND QVVPL TWO-BOLT PILLOW BLOCKS – STRAIGHT BORE EQUIVALENT

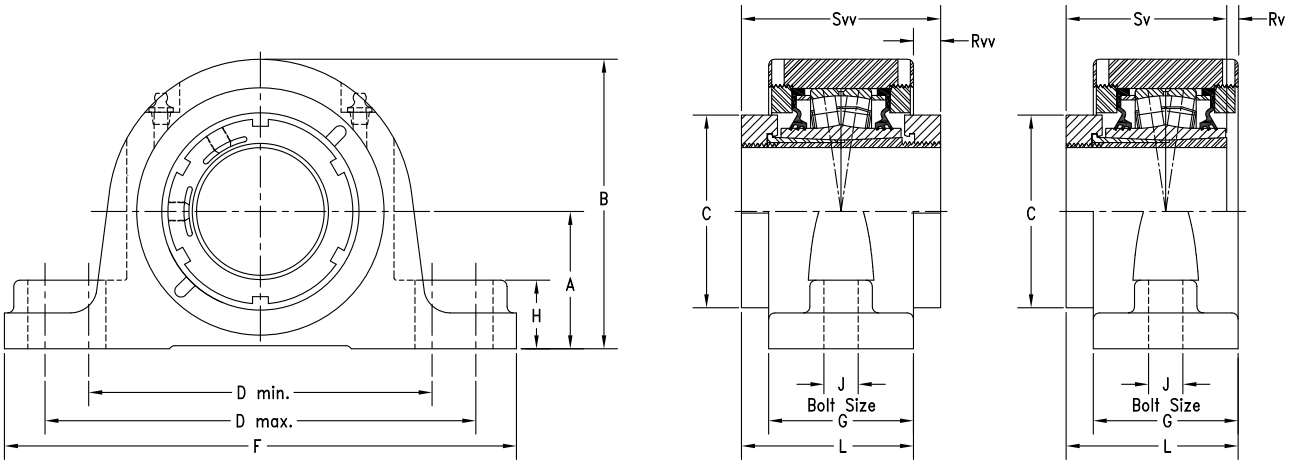

Bearing Part No.[1][2]	Shaft Dia.	Bearing No.	A	B	C	D min.	D max.	F	G	H	J	L	Rv[1]	Rvv	Sv[1]	Svv	Wt.
	mm in.		**mm** in.	**mm** in.	**mm** in.	**mm** in.	**mm** in.	**mm** in.	**mm** in.	**mm** in.	**mm** in.	**mm** in.	**mm** in.	**mm** in.	**mm** in.	**mm** in.	**kg** lbs.
QVPL11V115S QVVPL11V115S	1 15/16 in.	22211	**57.2** 2.25	**122.2** 4.81	**75.9** 2.99	**150.6** 5.93	**161.5** 6.36	**212.9** 8.38	**62.0** 2.44	**31.8** 1.25	**16** 5/8	**82.0** 3.23	**2.2** 0.09	**20.1** 0.79	**79.8** 3.14	**102.1** 4.02	**6.4** 14
QVPL11V200S QVVPL11V200S	2 in.																
QVPL11V050S QVVPL11V050S	**50 mm**																
QVPL12V203S QVVPL12V203S	2 3/16 in.	22212	**63.5** 2.50	**133.4** 5.25	**80.3** 3.16	**165.1** 6.50	**179.3** 7.06	**225.6** 8.88	**65.5** 2.58	**31.8** 1.25	**16** 5/8	**83.8** 3.30	**4.0** 0.16	**18.3** 0.72	**79.8** 3.14	**102.1** 4.02	**7.7** 17
QVPL12V204S QVVPL12V204S	2 1/4 in.																
QVPL12V055S QVVPL12V055S	**55 mm**																
QVPL14V060S QVVPL14V060S	**60 mm**	22214	**69.9** 2.75	**147.3** 5.80	**94.0** 3.70	**173** 6.81	**189.0** 7.44	**235.0** 9.25	**73.7** 2.90	**35.1** 1.38	**16** 5/8	**88.9** 3.50	**7.8** 0.31	**15.2** 0.60	**81.0** 3.19	**103.9** 4.09	**10.0** 22
QVPL14V207S QVVPL14V207S	2 7/16 in.																
QVPL14V208S QVVPL14V208S	2 1/2 in.																
QVPL14V065S QVVPL14V065S	**65 mm**																
QVPL16V211S QVVPL16V211S	2 11/16 in.	22216	**82.6** 3.25	**167.4** 6.59	**106.4** 4.19	**195.6** 7.70	**213.4** 8.40	**265.2** 10.44	**76.2** 3.00	**35.1** 1.38	**20** 3/4	**91.2** 3.59	**7.6** 0.30	**15.0** 0.59	**83.6** 3.29	**106.2** 4.18	**12.7** 28
QVPL16V212S QVVPL16V212S	2 3/4 in.																
QVPL16V070S QVVPL16V070S	**70 mm**																
QVPL16V215S QVVPL16V215S	2 15/16 in.																
QVPL16V300S QVVPL16V300S	3 in.																
QVPL16V075S QVVPL16V075S	**75 mm**																

[1]Bearing part numbers use QV to designate single-nut units (uses Rv and Sv dimensions) and QVV to designate double-nut units (uses Rvv and Svv dimensions).
[2]Single-nut (QV) part number shown. Double-nut (QVV) version available upon request.

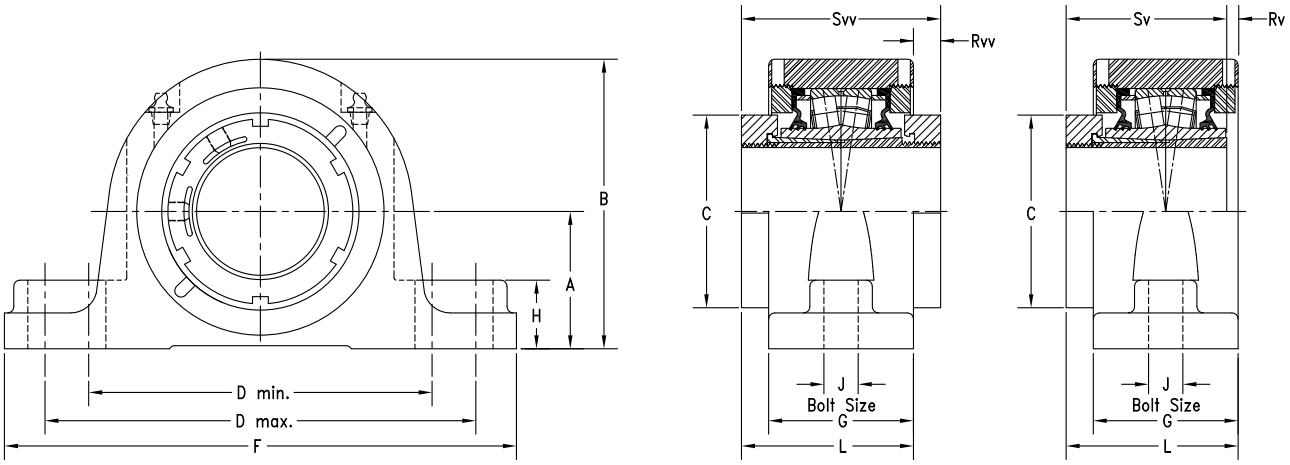

Bearing Part No.[1][2]	Shaft Dia.	Bearing No.	A	B	C	D min.	D max.	F	G	H	J	L	Rv[1]	Rvv	Sv[1]	Svv	Wt.
	mm in.		**mm** in.	**mm** in.	**mm** in.	**mm** in.	**mm** in.	**mm** in.	**mm** in.	**mm** in.	**mm** in.	**mm** in.	**mm** in.	**mm** in.	**mm** in.	**mm** in.	**kg** lbs.
QVPL19V303S QVVPL19V303S	3 3⁄16 in.	22219	**95.3** 3.75	**195.3** 7.69	**124.5** 4.90	**235.0** 9.25	**273.1** 10.75	**330.2** 13.00	**86.6** 3.41	**47.8** 1.88	**24** 7⁄8	**102.1** 4.02	**8.4** 0.33	**15.5** 0.61	**93.7** 3.69	**117.6** 4.63	**20.4** 45
QVPL19V304S QVVPL19V304S	3 1⁄4 in.																
QVPL19V080S QVVPL19V080S	**80 mm**																
QVPL19V085S QVVPL19V085S	**85 mm**																
QVPL19V307S QVVPL19V307S	3 7⁄16 in.																
QVPL19V308S QVVPL19V308S	3 1⁄2 in.																
QVPL19V090S QVVPL19V090S	**90 mm**																
QVPL22V311S QVVPL22V311S	3 11⁄16 in.	22222	**108** 4.25	**223** 8.78	**139.7** 5.50	**255.0** 10.04	**320.0** 12.60	**362.0** 14.25	**102.6** 4.04	**53.8** 2.12	**24** 1	**116.6** 4.59	**11.5** 0.45	**14.0** 0.55	**104.9** 4.13	**130.3** 5.13	**26.8** 59
QVPL22V312S QVVPL22V312S	3 3⁄4 in.																
QVPL22V100S QVVPL22V100S	**100 mm**																
QVPL22V315S QVVPL22V315S	3 15⁄16 in.																
QVPL22V400S QVVPL22V400S	4 in.																

[1]Bearing part numbers use QV to designate single-nut units (uses Rv and Sv dimensions) and QVV to designate double-nut units (uses Rvv and Svv dimensions).
[2]Single-nut (QV) part number shown. Double-nut (QVV) version available upon request.

QVPA AND QVVPA SAF TWO-BOLT PILLOW BLOCKS – TAPERED BORE EQUIVALENT

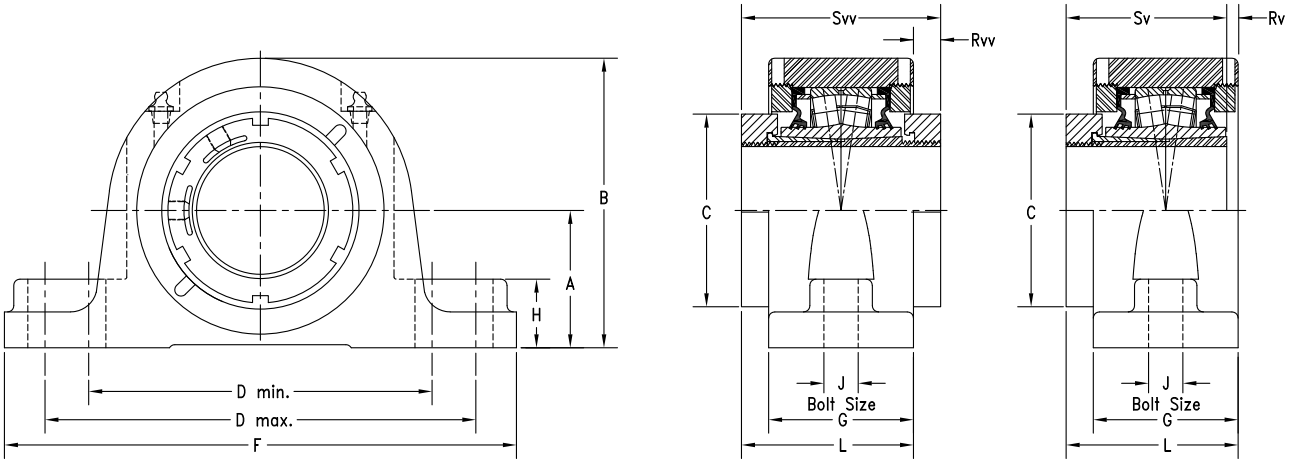

Bearing Part No.[1][2]	Shaft Dia.	Bearing No.	A	B	C	D min.	D max.	F	G	H	J	L	Rv[1]	Rvv	Sv[1]	Svv	Wt.
	mm in.		**mm** in.	**mm** in.	**mm** in.	**mm** in.	**mm** in.	**mm** in.	**mm** in.	**mm** in.	**mm** in.	**mm** in.	**mm** in.	**mm** in.	**mm** in.	**mm** in.	**kg** lbs.
QVPA13V203S QVVPA13V203S	2 3/16 in.	22213	**76.2** 3.00	**151.1** 5.95	**80.3** 3.16	**182.9** 7.20	**241.3** 9.50	**269.5** 10.61	**68.6** 2.70	**31.2** 1.23	**16** 5/8	**85.3** 3.36	**2.8** 0.11	**16.8** 0.66	**85.3** 3.36	**102.1** 4.02	**10.4** 23
QVPA13V204S QVVPA13V204S	2 1/4 in.																
QVPA13V055S QVVPA13V055S	**55 mm**																
QVPA15V060S QVVPA15V060S	**60 mm**	22215	**82.6** 3.25	**163.3** 6.43	**94.0** 3.70	**200.2** 7.88	**244.6** 9.63	**276.4** 10.88	**68.6** 2.70	**31.8** 1.25	**16** 5/8	**86.4** 3.40	**3.6** 0.14	**17.8** 0.70	**82.6** 3.25	**103.9** 4.09	**12.2** 27
QVPA15V207S QVVPA15V207S	2 7/16 in.																
QVPA15V208S QVVPA15V208S	2 1/2 in.																
QVPA15V065S QVVPA15V065S	**65 mm**																
QVPA16V211S QVVPA16V211S	2 11/16 in.	22216	**88.9** 3.50	**176.7** 6.96	**106.4** 4.19	**228.6** 9.00	**279.4** 11.00	**330.2** 13.00	**72.6** 2.86	**31.8** 1.25	**20** 3/4	**88.2** 3.47	**4.6** 0.18	**15.5** 0.61	**83.6** 3.29	**103.7** 4.08	**12.2** 27
QVPA16V212S QVVPA16V212S	2 3/4 in.																
QVPA16V070S QVVPA16V070S	**70 mm**																
QVPA17V211S QVVPA17V211S	2 11/16 in.	22217	**95.3** 3.75	**186** 7.32	**106.4** 4.19	**241.3** 9.50	**279.4** 11.00	**320.8** 12.63	**76.2** 3.00	**33.8** 1.33	**20** 3/4	**91.2** 3.59	**6.6** 0.26	**15.0** 0.59	**84.6** 3.33	**106.2** 4.18	**15.0** 33
QVPA17V212S QVVPA17V212S	2 3/4 in.																
QVPA17V070S QVVPA17V070S	**70 mm**																
QVPA17V215S QVVPA17V215S	2 15/16 in.																
QVPA17V300S QVVPA17V300S	3 in.																
QVPA17V075S QVVPA17V075S	**75 mm**																
QVPA19V303S QVVPA19V303S	3 3/16 in.	22219	**101.6** 4.00	**203.1** 8.00	**124.5** 4.90	**254.0** 10.00	**298.5** 11.75	**349.3** 13.75	**79.8** 3.14	**41.3** 1.63	**20** 3/4	**97.0** 3.82	**3.2** 0.13	**17.2** 0.68	**93.7** 3.69	**114.1** 4.49	**22.2** 49
QVPA19V304S QVVPA19V304S	3 1/4 in.																
QVPA19V080S QVVPA19V080S	**80 mm**																

[1]Bearing part numbers use QV to designate single-nut units (uses Rv and Sv dimensions) and QVV to designate double-nut units (uses Rvv and Svv dimensions).
[2]Single-nut (QV) part number shown. Double-nut (QVV) version available upon request.

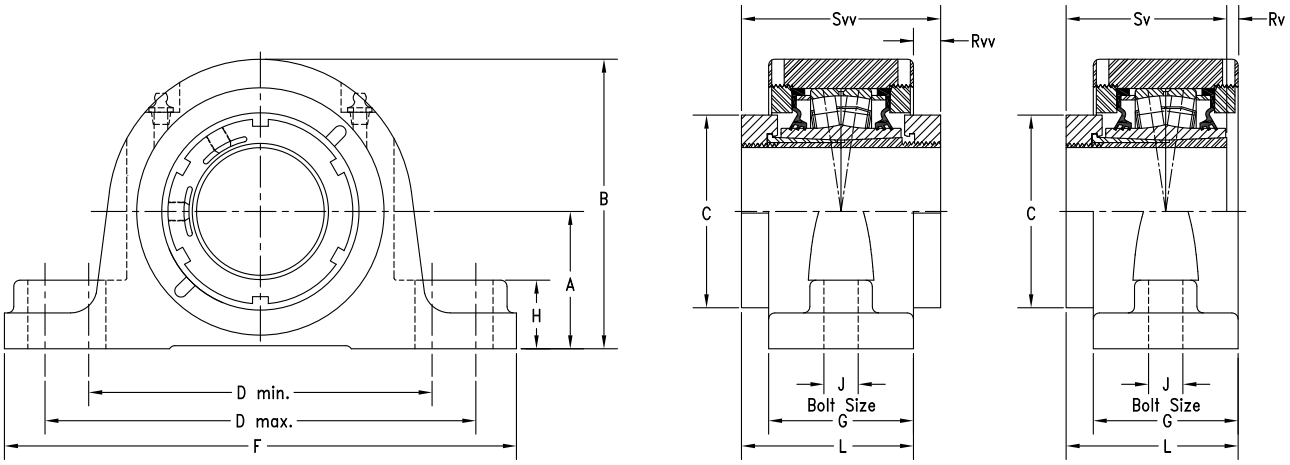

Bearing Part No.[1][2]	Shaft Dia.	Bearing No.	A	B	C	D min.	D max.	F	G	H	J	L	Rv[1]	Rvv	Sv[1]	Svv	Wt.
	mm in.		**mm** in.	**mm** in.	**mm** in.	**mm** in.	**mm** in.	**mm** in.	**mm** in.	**mm** in.	**mm** in.	**mm** in.	**mm** in.	**mm** in.	**mm** in.	**mm** in.	**kg** lbs.
QVPA19V303S QVVPA19V303S	3 3⁄16 in.	22220	**114.3** 4.50	**219.2** 8.63	**124.5** 4.90	**276.4** 10.88	**333.5** 13.13	**374.7** 14.75	**86.9** 3.42	**41.4** 1.63	**24** 7⁄8	**102.4** 4.03	**6.8** 0.27	**15.5** 0.61	**95.3** 3.75	**117.6** 4.63	**29.5** 65
QVPA19V304S QVVPA19V304S	3 1⁄4 in.																
QVPA20V080S QVVPA20V080S	**80 mm**																
QVPA20V085S QVVPA20V085S	**85 mm**																
QVPA20V307S QVVPA20V307S	3 7⁄16 in.																
QVPA20V308S QVVPA20V308S	3 1⁄2 in.																
QVPA20V090S QVVPA20V090S	**90 mm**																
QVPA22V311S QVVPA22V311S	3 11⁄16 in.	22222	**125.5** 4.94	**240.5** 9.47	**139.7** 5.50	**317.5** 12.50	**368.3** 14.50	**406.4** 16.00	**100.6** 3.96	**50.8** 2.00	**24** 7⁄8	**115.6** 4.55	**8.7** 0.34	**15.0** 0.59	**104.9** 4.13	**130.3** 5.13	**38.1** 84
QVPA22V312S QVVPA22V312S	3 3⁄4 in.																
QVPA22V100S QVVPA22V100S	**100 mm**																
QVPA22V315S QVVPA22V315S	3 15⁄16 in.																
QVPA22V400S QVVPA22V400S	4 in.																
QVPA26V110S QVVPA26V110S	**110 mm**	22226	**152.4** 6.00	**284.0** 11.18	**174.8** 6.88	**162.0** 14.25	**400.1** 15.75	**444.5** 17.50	**128.0** 5.04	**51.8** 2.04	**24** 1	**143.2** 5.64	**6.0** 0.24	**35.2** 1.39	**147.8** 5.82	**178.3** 7.02	**61.7** 136
QVPA26V407S QVVPA26V407S	4 7⁄16 in.																
QVPA26V408S QVVPA26V408S	4 1⁄2 in.																
QVPA26V115S QVVPA26V115S	**115 mm**																
QVPA28V125S QVVPA28V125S	**125 mm**	22228	**152.4** 6.00	**297.2** 11.70	**190.0** 7.48	**384.3** 15.13	**441.5** 17.38	**499.9** 19.68	**108.0** 4.25	**51.8** 2.04	**30** 1 1⁄4	**132.0** 5.20	**4.7** 0.18	**46.5** 1.83	**147.8** 5.82	**178.3** 7.02	**61.8** 136
QVPA28V415S QVVPA28V415S	4 15⁄16 in.																
QVPA28V500S QVVPA28V500S	5 in.																
QVPA28V130S QVVPA28V130S	**130 mm**																

[1]Bearing part numbers use QV to designate single-nut units (uses Rv and Sv dimensions) and QVV to designate double-nut units (uses Rvv and Svv dimensions).
[2]Single-nut (QV) part number shown. Double-nut (QVV) version available upon request.

QVPN AND QVVPN SN-STYLE TWO-BOLT PILLOW BLOCKS – TAPERED BORE EQUIVALENT

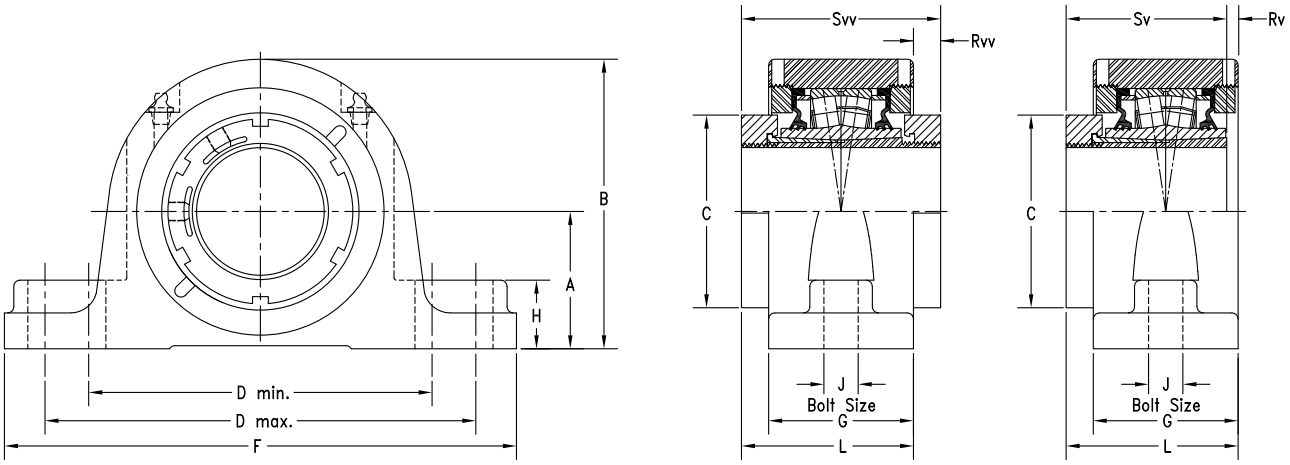

Bearing Part No.[1][2]	Shaft Dia.	Bearing No.	A	B	C	D min.	D max.	F	G	H	J	L	Rv[1]	Rvv	Sv[1]	Svv	Wt.
	mm in.		**mm** in.	**mm** in.	**mm** in.	**mm** in.	**mm** in.	**mm** in.	**mm** in.	**mm** in.	**mm** in.	**mm** in.	**mm** in.	**mm** in.	**mm** in.	**mm** in.	**kg** lbs.
QVPN11V115S QVVPN11V115S	1 15/16 in.	22211	**69.9** 2.75	**135.4** 5.33	**75.9** 2.99	**165.1** 6.50	**221.0** 8.70	**251.0** 9.88	**60.5** 2.38	**31.8** 1.25	**16** 5/8	**81.3** 3.20	**1.5** 0.06	**20.8** 0.82	**79.8** 3.14	**102.1** 4.02	**7.7** 17
QVPN11V200S QVVPN11V200S	2 in.																
QVPN11V050S QVVPN11V050S	**50 mm**																
QVPN12V055S QVVPN12V055S	**55 mm**	22212	**70.0** 2.76	**140.5** 5.53	**80.0** 3.15	**177.8** 7.00	**219.2** 8.63	**254.0** 10.00	**60.5** 2.38	**31.8** 1.25	**16** 5/8	**81.3** 3.20	**1.5** 0.06	**20.8** 0.82	**79.8** 3.14	**102.1** 4.02	**9.1** 20
QVPN13V203S QVVPN13V203S	2 3/16 in.	22213	**80.0** 3.15	**154.9** 6.10	**80.3** 3.16	**182.9** 7.20	**241.3** 9.50	**269.5** 10.61	**68.6** 2.70	**35.1** 1.38	**16** 5/8	**85.3** 3.36	**0.0** 0.0	**16.8** 0.66	**85.3** 3.36	**102.1** 4.02	**10.4** 23
QVPN13V204S QVVPN13V204S	2 1/4 in.																
QVPN14V060S QVVPN14V060S	**60 mm**	22214	**80.0** 3.15	**157.5** 6.20	**94.0** 3.70	**195.6** 7.70	**235.0** 9.25	**275.0** 10.83	**74.0** 2.91	**35.1** 1.38	**16** 5/8	**89.0** 3.50	**6.6** 0.26	**15.0** 0.59	**81.0** 3.19	**104.0** 4.09	**10.4** 23
QVPN15V207S QVVPN15V207S	2 7/16 in.	22215	**80.0** 3.15	**160.8** 6.33	**94.0** 3.70	**200.2** 7.88	**244.6** 9.63	**276.4** 10.88	**68.6** 2.70	**29.2** 1.15	**16** 5/8	**86.4** 3.40	**3.6** 0.14	**17.8** 0.70	**82.6** 3.25	**103.9** 4.09	**12.2** 27
QVPN15V208S QVVPN15V208S	2 1/2 in.																
QVPN15V065S QVVPN15V065S	**65 mm**																
QVPN16V211S QVVPN16V211S	2 11/16 in.	22216	**95.0** 3.74	**180.3** 7.10	**106.4** 4.19	**235.0** 9.25	**266.7** 10.50	**315.0** 12.40	**72.6** 2.86	**31.8** 1.25	**20** 3/4	**89.4** 3.52	**4.6** 0.18	**16.8** 0.66	**83.6** 3.29	**106.0** 4.17	**13.6** 30
QVPN16V212S QVVPN16V212S	2 3/4 in.																
QVPN16V070S QVVPN16V070S	**70 mm**																
QVPN17V215S QVVPN17V215S	2 15/16 in.	22217	**95.3** 3.75	**185.9** 7.32	**106.4** 4.19	**241.3** 9.50	**279.4** 11.00	**320.8** 12.63	**76.2** 3.00	**33.8** 1.33	**20** 3/4	**91.2** 3.59	**6.6** 0.26	**15.0** 0.59	**84.6** 3.33	**106.2** 4.18	**15.0** 33
QVPN17V300S QVVPN17V300S	3 in.																
QVPN17V075S QVVPN17V075S	**75 mm**																
QVPN19V303S QVVPN19V303S	3 3/16 in.	22219	**100.0** 3.94	**195.3** 7.69	**124.5** 4.90	**285.8** 11.25	**295.4** 11.63	**344.9** 13.58	**86.6** 3.41	**38.9** 1.53	**20** 3/4	**102.0** 4.02	**6.4** 0.25	**16.0** 0.63	**93.7** 3.69	**118.1** 4.65	**22.2** 49
QVPN19V304S QVVPN19V304S	3 1/4 in.																
QVPN19V080S QVVPN19V080S	**80 mm**																
QVPN19V085S QVVPN19V085S	**85 mm**	22219	**112.0** 4.41	**212.3** 8.36	**124.5** 4.90	**285.8** 11.25	**295.4** 11.63	**346.2** 13.63	**82.8** 3.26	**38.9** 1.53	**20** 3/4	**100.6** 3.96	**4.7** 0.19	**17.8** 0.70	**93.7** 3.69	**118.1** 4.65	**23.1** 51

[1]Bearing part numbers use QV to designate single-nut units (uses Rv and Sv dimensions) and QVV to designate double-nut units (uses Rvv and Svv dimensions).
[2]Single-nut (QV) part number shown. Double-nut (QVV) version available upon request.

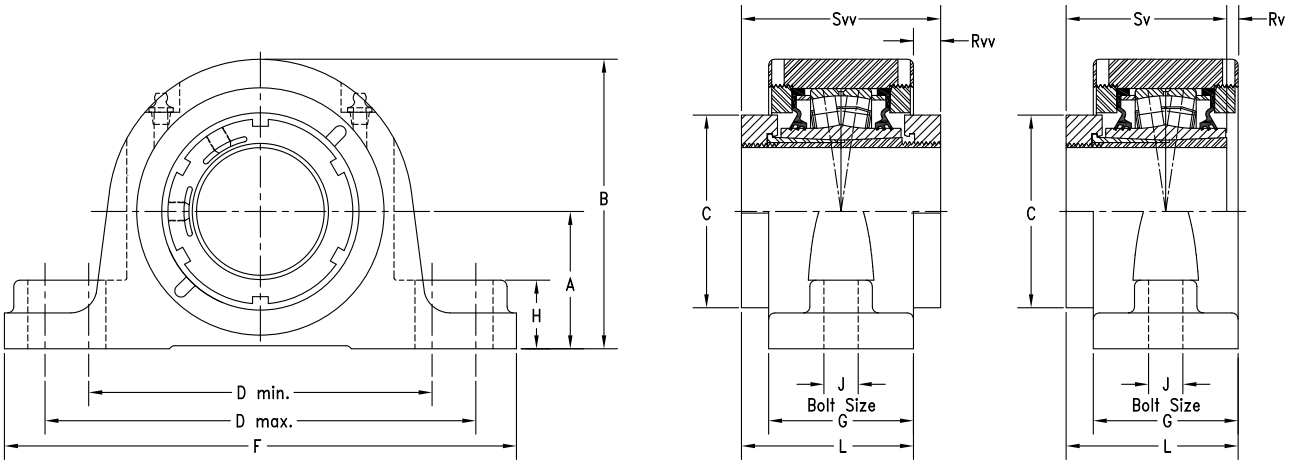

Bearing Part No.[1][2]	Shaft Dia.	Bearing No.	A	B	C	D min.	D max.	F	G	H	J	L	Rv[1]	Rvv	Sv[1]	Svv	Wt.
	mm in.		**mm** in.	**mm** in.	**mm** in.	**mm** in.	**mm** in.	**mm** in.	**mm** in.	**mm** in.	**mm** in.	**mm** in.	**mm** in.	**mm** in.	**mm** in.	**mm** in.	**kg** lbs.
QVPN20V307S QVVPN20V307S	3 7/16 in.	22220	**112.0** 4.41	**216.9** 8.54	**124.5** 4.90	**276.4** 10.88	**333.5** 13.13	**374.7** 14.75	**86.9** 3.42	**38.9** 1.53	**24** 7/8	**102.4** 4.03	**6.8** 0.27	**15.5** 0.61	**95.3** 3.75	**117.6** 4.63	**29.5** 65
QVPN20V308S QVVPN20V308S	3 1/2 in.																
QVPN20V090S QVVPN20V090S	**90 mm**																
QVPN22V311S QVVPN22V311S	3 11/16 in.	22222	**125.5** 4.94	**240.5** 9.47	**139.7** 5.50	**317.5** 12.50	**368.3** 14.50	**406.4** 16.00	**100.6** 3.96	**50.8** 2.00	**24** 7/8	**115.6** 4.55	**8.7** 0.34	**15.0** 0.59	**104.9** 4.13	**130.3** 5.13	**38.1** 84
QVPN22V312S QVVPN22V312S	3 3/4 in.																
QVPN22V100S QVVPN22V100S	**100 mm**																
QVPN22V315S QVVPN22V315S	3 15/16 in.																
QVPN22V400S QVVPN22V400S	4 in.																
QVPN24V110S QVVPN24V110S	**110 mm**	22224	**140.0** 5.51	**262.9** 10.35	**174.8** 6.88	**344.4** 13.56	**355.6** 14.00	**409.7** 16.13	**97.8** 3.85	**50.8** 2.00	**24** 7/8	**138.2** 5.44	**9.8** 0.38	**40.4** 1.59	**147.8** 5.82	**178.3** 7.02	**49.9** 110
QVPN26V407S QVVPN26V407S	4 7/16 in.	22226	**150.0** 5.91	**281.7** 11.09	**174.8** 6.88	**362.0** 14.25	**400.1** 15.75	**444.5** 17.50	**128.0** 5.04	**49.3** 1.94	**24** 1	**153.2** 6.03	**6.0** 0.24	**25.1** 0.99	**147.8** 5.82	**178.3** 7.02	**61.7** 136
QVPN26V408S QVVPN26V408S	4 1/2 in.																
QVPN26V115S QVVPN26V115S	**115 mm**																
QVPN28V125S QVVPN28V125S	**125 mm**	22228	**150.0** 5.91	**394.9** 11.61	**190.0** 7.48	**384.3** 15.13	**441.5** 17.38	**423.9** 16.69	**108.0** 4.25	**49.5** 1.95	**30** 1 1/4	**132.0** 5.20	**4.7** 0.18	**46.5** 1.83	**147.8** 5.82	**178.3** 7.02	**63.0** 138
QVPN28V415S QVVPN28V415S	4 15/16 in.																
QVPN28V500S QVVPN28V500S	5 in.																
QVPN28V130S QVVPN28V130S	**130 mm**																

[1]Bearing part numbers use QV to designate single-nut units (uses Rv and Sv dimensions) and QVV to designate double-nut units (uses Rvv and Svv dimensions).
[2]Single-nut (QV) part number shown. Double-nut (QVV) version available upon request.

QVSN AND QVVSN SN-STYLE TWO-BOLT PILLOW BLOCKS – PURE METRIC DESIGN

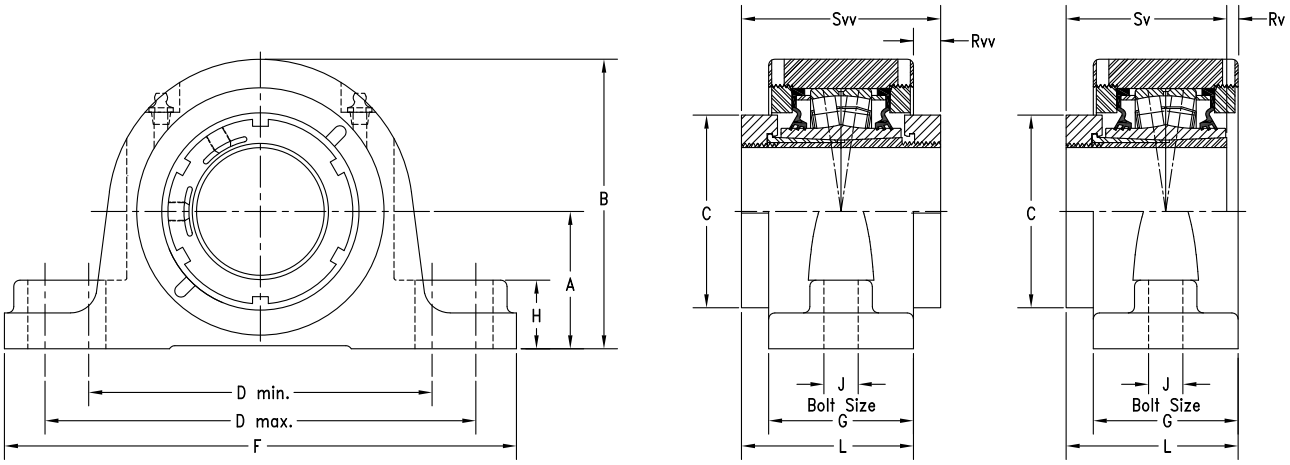

Bearing Part No.[1][2]	Shaft Dia.	Bearing No.	A	B	C	D min.	D max.	F	G	H	J	L	Rv[1]	Rvv	Sv[1]	Svv	Wt.
	mm in.		**mm** in.	**mm** in.	**mm** in.	**mm** in.	**mm** in.	**mm** in.	**mm** in.	**mm** in.	**mm** in.	**mm** in.	**mm** in.	**mm** in.	**mm** in.	**mm** in.	**kg** lbs.
QVVSN11V115S	1 15/16 in.	22211	**70** 2.76	**136** 5.35	**76** 2.99	**183** 7.20	**216** 8.50	**254** 10.00	**68** 2.68	**25** 0.98	**16** 5/8	**85** 3.35	**5.3** 0.21	**17** 0.67	**79.8** 3.14	**102** 4.02	**8.4** 18
QVVSN11V200S	2 in.																
QVVSN11V050S	**50 mm**																
QVVSN12V203S	2 3/16 in.	22212	**70** 2.76	**141** 5.54	**80** 3.16	**183** 7.20	**216** 8.50	**254** 10.00	**68** 2.69	**25** 0.98	**16** 5/8	**85** 3.35	**5.3** 0.21	**17** 0.67	**79.8** 3.14	**102** 4.02	**13.2** 29
QVVSN12V204S	2 1/4 in.																
QVVSN12V055S	**55 mm**																
QVVSN14V060S	**60 mm**	22214	**80** 3.15	**157** 6.20	**94** 3.70	**196** 7.70	**235** 9.25	**275** 10.83	**74** 2.91	**35** 1.38	**16** 5/8	**89** 3.50	**6.6** 0.26	**15** 0.59	**81.0** 3.19	**104** 4.09	**16.8** 37
QVVSN14V207S	2 7/16 in.																
QVVSN14V208S	2 1/2 in.																
QVVSN14V065S	**65 mm**																
QVVSN16V211S	2 11/16 in.	22216	**95** 3.74	**183** 7.19	**106** 4.19	**241** 9.50	**279** 11	**316** 12.44	**76** 3.00	**34** 1.32	**20** 3/4	**91** 3.58	**6.2** 0.24	**15** 0.59	**83.6** 3.29	**106** 4.17	**20.9** 46
QVVSN16V212S	2 3/4 in.																
QVVSN16V070S	**70 mm**																
QVVSN16V215S	2 15/16 in.																
QVVSN16V300S	3 in.																
QVVSN16V075S	**75 mm**																
QVVSN19V303S	3 3/16 in.	22219	**100** 3.94	**200** 7.87	**124** 4.90	**280** 11.02	**292** 11.50	**345** 13.58	**86** 3.38	**39** 1.53	**20** 3/4	**102** 4.02	**6.4** 0.25	**16** 0.63	**93.7** 3.69	**118** 4.65	**25.4** 56
QVVSN19V304S	3 1/4 in.																
QVVSN19V080S	**80 mm**																
QVVSN19V085S	**85 mm**	22219	**112** 4.41	**212** 8.34	**124** 4.90	**280** 11.02	**292** 11.50	**345** 13.58	**86** 3.38	**39** 1.53	**20** 3/4	**102** 4.02	**6.4** 0.25	**16** 0.63	**93.7** 3.69	**118** 4.65	**25.4** 56

[1]Bearing part numbers use QV to designate single-nut units (uses Rv and Sv dimensions) and QVV to designate double-nut units (uses Rvv and Svv dimensions).
[2]Single-nut (QV) part number shown. Double-nut (QVV) version available upon request.

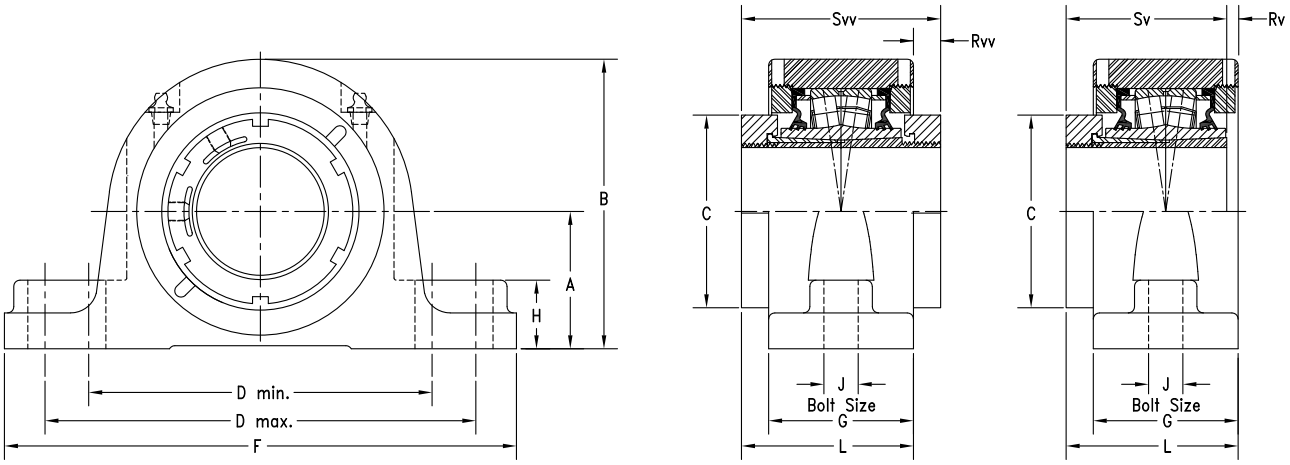

Bearing Part No.[1][2]	Shaft Dia.	Bearing No.	A	B	C	D min.	D max.	F	G	H	J	L	Rv[1]	Rvv	Sv[1]	Svv	Wt.
	mm in.		**mm** in.	**mm** in.	**mm** in.	**mm** in.	**mm** in.	**mm** in.	**mm** in.	**mm** in.	**mm** in.	**mm** in.	**mm** in.	**mm** in.	**mm** in.	**mm** in.	**kg** lbs.
QVVSN19V307S	3 7⁄16 in.	22219	**112** 4.41	**212** 8.34	**124** 4.90	**290** 11.42	**327** 12.87	**380** 14.96	**86** 3.38	**39** 1.53	**24** 7⁄8	**102** 4.02	**6.4** 0.25	**16** 0.63	**93.7** 3.69	**118** 4.65	**25.4** 56
QVVSN19V308S	3 ½ in.																
QVVSN19V090S	**90 mm**																
QVVSN22V311S	3 11⁄16 in.	22222	**125** 4.92	**241** 9.48	**140** 5.50	**320** 12.58	**366** 14.42	**410** 16.14	**101** 3.96	**50** 1.98	**24** 7⁄8	**116** 4.57	**8.8** 0.35	**15** 0.59	**104.9** 4.13	**130** 5.12	**35.8** 79
QVVSN22V312S	3 ¾ in.																
QVVSN22V100S	**100 mm**																
QVVSN22V315S	3 15⁄16 in.																
QVVSN22V400S	4 in.																
QVVSN26V110S	**110 mm**	22226	**140** 5.51	**270** 10.63	**175** 6.88	**332** 13.08	**365** 14.37	**410** 16.14	**113** 4.43	**39** 1.55	**24** 7⁄8	**146** 5.75	**2.0** 0.08	**33** 1.30	**147.8** 5.82	**178** 7.01	**39.9** 88
QVVSN26V407S	4 7⁄16 in.	22226	**150** 5.91	**279** 10.99	**175** 6.88	**367** 14.45	**400** 15.75	**445** 17.52	**113** 4.43	**49** 1.94	**24** 7⁄8	**146** 5.75	**2.4** 0.10	**33** 1.30	**147.8** 5.82	**178** 7.01	**39.9** 88
QVVSN26V408S	4 ½ in.																
QVVSN26V115S	**115 mm**																
QVVSN28V125S	**125 mm**	22228	**150** 5.91	**294** 11.56	**190** 7.48	**402** 15.84	**435** 17.13	**500** 19.68	**116** 4.56	**49** 1.94	**30** 1 1⁄4	**148** 5.83	**0.7** 0.03	**31** 1.22	**147.8** 5.82	**178** 7.01	**67.0** 147
QVVSN28V415S	4 15⁄16 in.																
QVVSN28V500S	5 in.																
QVVSN28V130S	**130 mm**																

[1]Bearing part numbers use QV to designate single-nut units (uses Rv and Sv dimensions) and QVV to designate double-nut units (uses Rvv and Svv dimensions).
[2]Single-nut (QV) part number shown. Double-nut (QVV) version available upon request.

QVPKT AND QVVPKT 9000 SERIES TWO-BOLT PILLOW BLOCKS – TAPERED BORE EQUIVALENT

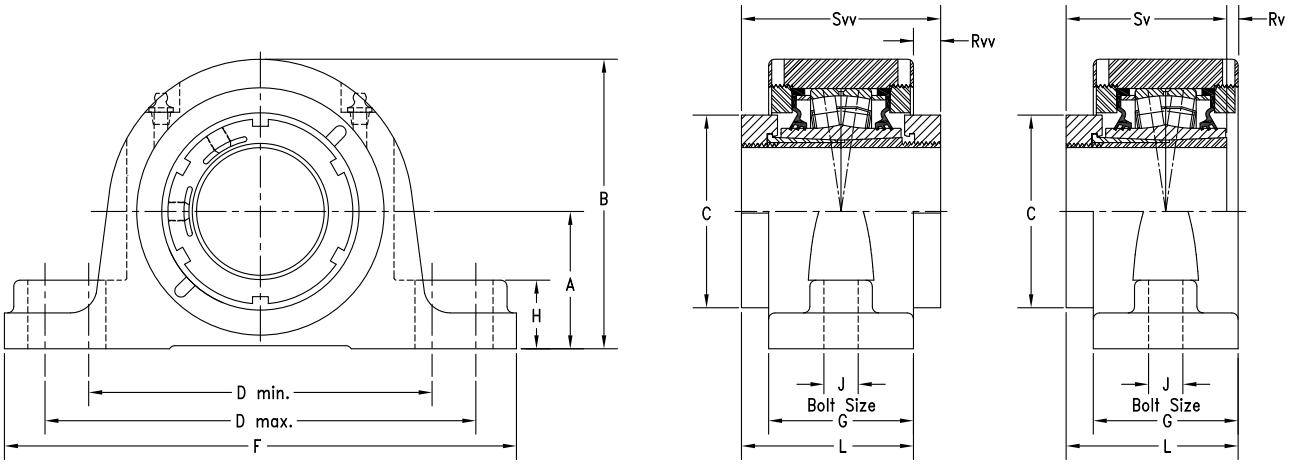

Bearing Part No.[1][2]	Shaft Dia.	Bearing No.	A	B	C	D min.	D max.	F	G	H	J	L	Rv[1]	Rvv	Sv[1]	Svv	Wt.
	mm in.		**mm** in.	**mm** in.	**mm** in.	**mm** in.	**mm** in.	**mm** in.	**mm** in.	**mm** in.	**mm** in.	**mm** in.	**mm** in.	**mm** in.	**mm** in.	**mm** in.	**kg** lbs.
QVPKT13V203S QVVPKT13V203S	2 3⁄16 in.	22213	**76.2** 3.00	**153.7** 6.05	**80.3** 3.16	**194.6** 7.66	**223.0** 8.78	**285.8** 11.25	**73.7** 2.90	**35.1** 1.38	**20** 3⁄4	**87.9** 3.46	**2.6** 0.10	**14.2** 0.56	**85.3** 3.36	**102.1** 4.02	**10.0** 22
QVPKT13V204S QVVPKT13V204S	2 1⁄4 in.																
QVPKT13V055S QVVPKT13V055S	**55 mm**																
QVPKT15V060S QVVPKT15V060S	**60 mm**	22215	**88.9** 3.50	**173.7** 6.84	**94.0** 3.70	**230.1** 9.06	**265.2** 10.44	**330.2** 13.00	**75.7** 2.98	**35.1** 1.38	**24** 7⁄8	**89.9** 3.54	**7.2** 0.28	**14.2** 0.56	**82.6** 3.25	**103.9** 4.09	**12.7** 28
QVPKT15V207S QVVPKT15V207S	2 7⁄16 in.																
QVPKT15V208S QVVPKT15V208S	2 1⁄2 in.																
QVPKT15V065S QVVPKT15V065S	**65 mm**																

[1]Bearing part numbers use QV to designate single-nut units (uses Rv and Sv dimensions) and QVV to designate double-nut units (uses Rvv and Svv dimensions).
[2]Single-nut (QV) part number shown. Double-nut (QVV) version available upon request.

QVPXT AND QVVPXT 5000 SERIES TWO-BOLT PILLOW BLOCKS – STRAIGHT BORE EQUIVALENT

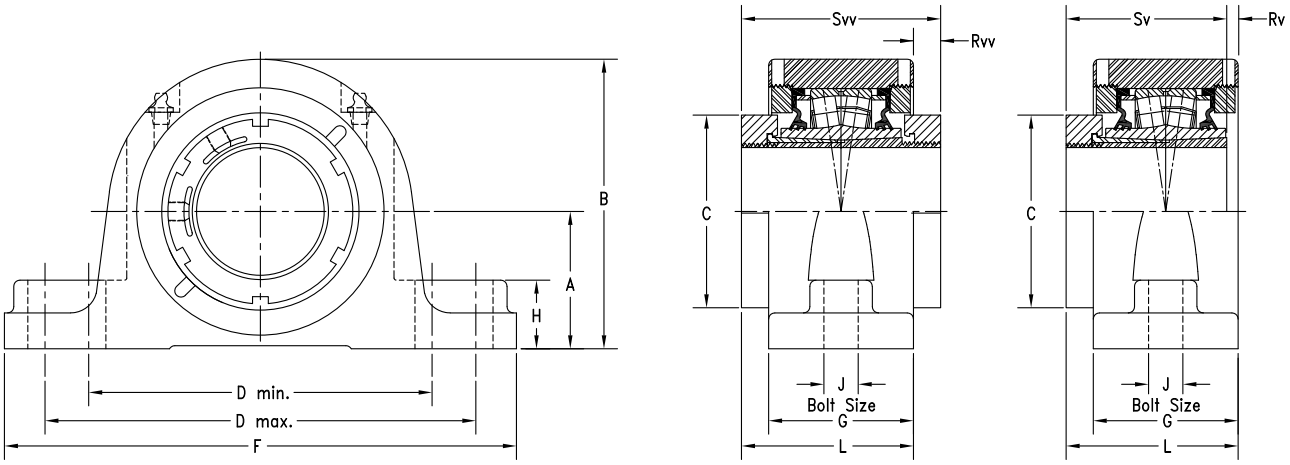

Bearing Part No.[1][2]	Shaft Dia.	Bearing No.	A	B	C	D min.	D max.	F	G	H	J	L	Rv[1]	Rvv	Sv[1]	Svv	Wt.
	mm in.		**mm** in.	**mm** in.	**mm** in.	**mm** in.	**mm** in.	**mm** in.	**mm** in.	**mm** in.	**mm** in.	**mm** in.	**mm** in.	**mm** in.	**mm** in.	**mm** in.	**kg** lbs.
QVPXT14V060S QVVPXT14V060S	**60 mm**	22214	**76.2** 3.00	**153.7** 6.05	**94.0** 3.70	**194.6** 7.66	**233.0** 8.78	**285.8** 11.25	**73.7** 2.90	**35.1** 1.38	**20** 3/4	**88.9** 3.50	**6.6** 0.26	**15.2** 0.60	**81.0** 3.19	**103.9** 4.09	**10.0** 22
QVPXT14V207S QVVPXT14V207S	2 7/16 in.																
QVPXT14V208S QVVPXT14V208S	2 1/2 in.																
QVPXT14V065S QVVPXT14V065S	**65 mm**																
QVPXT16V211S QVVPXT16V211S	2 11/16 in.	22216	**88.9** 3.50	**173.7** 6.84	**106.4** 4.19	**230.1** 9.06	**265.2** 10.44	**330.2** 13.00	**75.7** 2.98	**35.1** 1.38	**24** 7/8	**90.9** 3.58	**6.0** 0.24	**15.2** 0.60	**83.6** 3.29	**106.2** 4.18	**12.7** 28
QVPXT16V212S QVVPXT16V212S	2 3/4 in.																
QVPXT16V070S QVVPXT16V070S	**70 mm**																
QVPXT16V215S QVVPXT16V215S	2 15/16 in.																
QVPXT16V300S QVVPXT16V300S	3 in.																
QVPXT16V075S QVVPXT16V075S	**75 mm**																

[1]Bearing part numbers use QV to designate single-nut units (uses Rv and Sv dimensions) and QVV to designate double-nut units (uses Rvv and Svv dimensions).
[2]Single-nut (QV) part number shown. Double-nut (QVV) version available upon request.

QVPF AND QVVPF FOUR-BOLT PILLOW BLOCKS – STRAIGHT BORE EQUIVALENT

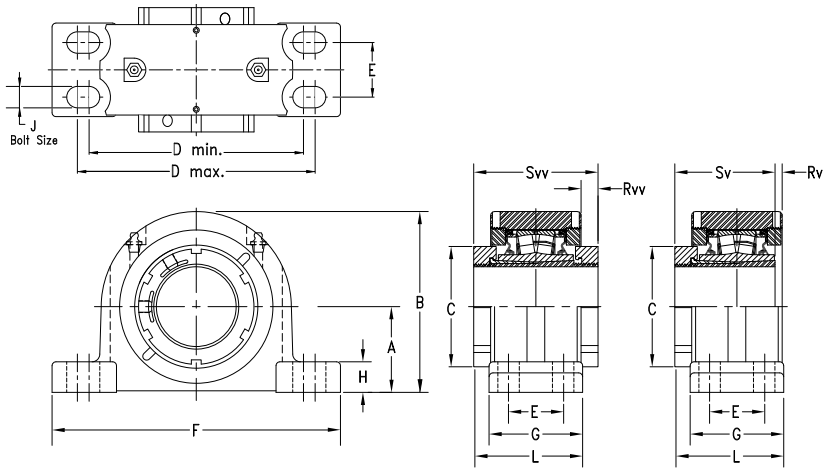

Bearing Part No.[1][2]	Shaft Dia.	Bearing No.	A	B	C	D min.	D max.	E	F	G	H	J	L	Rv[1]	Rvv	Sv[1]	Svv	Wt.
	mm in.		**mm** in.	**mm** in.	**mm** in.	**mm** in.	**mm** in.	**mm** in.	**mm** in.	**mm** in.	**mm** in.	**mm** in.	**mm** in.	**mm** in.	**mm** in.	**mm** in.	**mm** in.	**kg** lbs.
QVPF14V060S QVVPF14V060S	**60 mm**	22214	**69.9** 2.75	**147.3** 5.80	**94.0** 3.70	**174.8** 6.88	**193.8** 7.63	**44.5** 1.75	**235.0** 9.25	**76.2** 3.00	**24.9** 0.98	**16** ⅝	**90.2** 3.55	**6.5** 0.26	**15.2** 0.60	**81.0** 3.19	**103.9** 4.09	**9.1** 20
QVPF14V207S QVVPF14V207S	2 7⁄16 in.																	
QVPF14V208S QVVPF14V208S	2 ½ in.																	
QVPF14V065S QVVPF14V065S	**65 mm**																	
QVPF16V211S QVVPF16V211S	2 11⁄16 in.	22216	**82.6** 3.25	**167.4** 6.59	**106.4** 4.19	**193.0** 7.60	**231.1** 9.10	**47.8** 1.88	**265.2** 10.44	**79.5** 3.13	**32.8** 1.29	**16** ⅝	**93.0** 3.66	**6.1** 0.24	**15.2** 0.60	**83.6** 3.29	**106.2** 4.18	**12.2** 27
QVPF16V212S QVVPF16V212S	2 ¾ in.																	
QVPF16V070S QVVPF16V070S	**70 mm**																	
QVPF16V215S QVVPF16V215S	2 15⁄16 in.																	
QVPF16V300S QVVPF16V300S	3 in.																	
QVPF16V075S QVVPF16V075S	**75 mm**																	
QVPF19V303S QVVPF19V303S	3 3⁄16 in.	22219	**95.3** 3.75	**195.3** 7.69	**124.5** 4.90	**225.6** 8.88	**276.4** 10.88	**50.8** 2.00	**312.4** 12.30	**95.3** 3.75	**39.6** 1.56	**20** ¾	**106.4** 4.19	**7.8** 0.31	**14.5** 0.57	**93.7** 3.69	**117.6** 4.63	**22.2** 49
QVPF19V304S QVVPF19V304S	3 ¼ in.																	
QVPF19V080S QVVPF19V080S	**80 mm**																	
QVPF19V085S QVVPF19V085S	**85 mm**																	
QVPF19V307S QVVPF19V307S	3 7⁄16 in.																	
QVPF19V308S QVVPF19V308S	3 ½ in.																	
QVPF19V090S QVVPF19V090S	**90 mm**																	

[1]Bearing part numbers use QV to designate single-nut units (uses Rv and Sv dimensions) and QVV to designate double-nut units (uses Rvv and Svv dimensions).
[2]Single-nut (QV) part number shown. Double-nut (QVV) version available upon request.

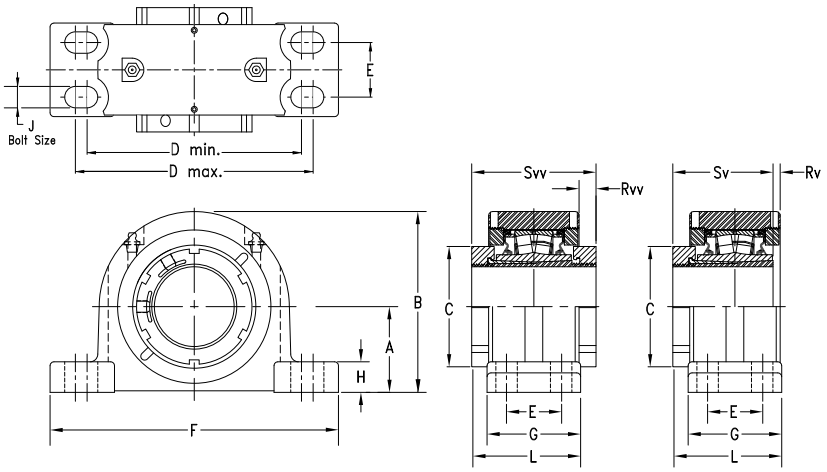

Bearing Part No.[1][2]	Shaft Dia.	Bearing No.	A	B	C	D min.	D max.	E	F	G	H	J	L	Rv[1]	Rvv	Sv[1]	Svv	Wt.
	mm in.		**mm** in.	**mm** in.	**mm** in.	**mm** in.	**mm** in.	**mm** in.	**mm** in.	**mm** in.	**mm** in.	**mm** in.	**mm** in.	**mm** in.	**mm** in.	**mm** in.	**mm** in.	**kg** lbs.
QVPF22V311S QVVPF22V311S	3 11/16 in.	22222	**108.0** 4.25	**223.0** 8.78	**139.7** 5.50	**276.4** 10.88	**339.9** 13.38	**57.2** 2.25	**378.0** 14.88	**109.5** 4.31	**35.6** 1.40	**20** ¾	**119.9** 4.72	**8.8** 0.35	**14.7** 0.58	**104.9** 4.13	**130.3** 5.13	**30.4** 67
QVPF22V312S QVVPF22V312S	3 ¾ in.																	
QVPF22V100S QVVPF22V100S	**100 mm**																	
QVPF22V315S QVVPF22V315S	3 15/16 in.																	
QVPF22V400S QVVPF22V400S	4 in.																	
QVPF26V110S QVVPF26V110S	**110 mm**	22226	**120.7** 4.75	**250.7** 9.87	**174.8** 6.88	**301.8** 11.88	**368.3** 14.50	**63.5** 2.50	**409.7** 16.13	**120.7** 4.75	**40.1** 1.58	**20** ¾	**149.6** 5.89	**2.8** 0.11	**32.8** 1.29	**147.8** 5.82	**178.3** 7.02	**37.2** 82
QVPF26V407S QVVPF26V407S	4 7/16 in.																	
QVPF26V408S QVVPF26V408S	4 ½ in.																	
QVPF26V115S QVVPF26V115S	**115 mm**																	
QVPF28V125S QVVPF28V125S	**125 mm**	22228	**139.7** 5.50	**279.7** 11.01	**190.0** 7.48	**349.3** 13.75	**403.4** 15.88	**69.9** 2.75	**444.5** 17.50	**128.0** 5.04	**39.1** 1.54	**24** ⅞	**153.2** 6.03	**1.0** 0.04	**31.5** 1.24	**147.8** 5.82	**178.3** 7.02	**60.8** 134
QVPF28V415S QVVPF28V415S	4 15/16 in.																	
QVPF28V500S QVVPF28V500S	5 in.																	
QVPF28V130S QVVPF28V130S	**130 mm**																	

[1]Bearing part numbers use QV to designate single-nut units (uses Rv and Sv dimensions) and QVV to designate double-nut units (uses Rvv and Svv dimensions).
[2]Single-nut (QV) part number shown. Double-nut (QVV) version available upon request.

QVPR AND QVVPR FOUR-BOLT PILLOW BLOCKS – STRAIGHT BORE EQUIVALENT

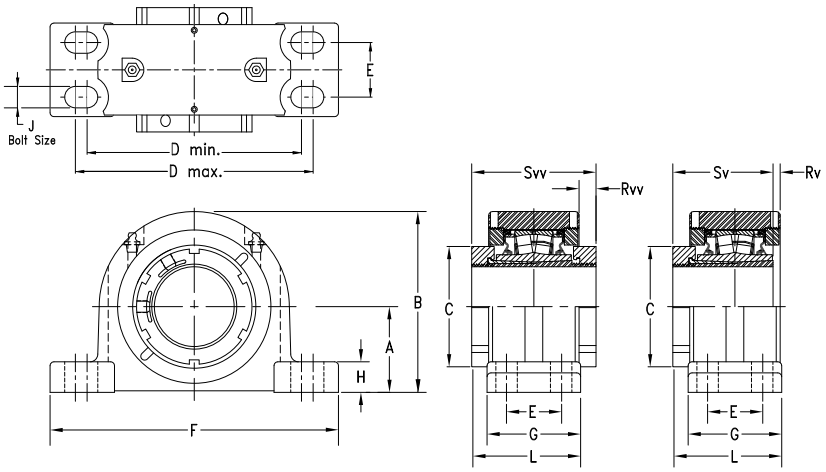

Bearing Part No.[1][2]	Shaft Dia.	Bearing No.	A	B	C	D min.	D max.	E	F	G	H	J	L	Rv[1]	Rvv	Sv[1]	Svv	Wt.
	mm in.		**mm** in.	**mm** in.	**mm** in.	**mm** in.	**mm** in.	**mm** in.	**mm** in.	**mm** in.	**mm** in.	**mm** in.	**mm** in.	**mm** in.	**mm** in.	**mm** in.	**mm** in.	**kg** lbs.
QVPR14V060S QVVPR14V060S	**60 mm**	22214	**69.9** 2.75	**147.3** 5.80	**94.0** 3.70	**181.1** 7.13	**222.2** 8.75	**47.8** 1.88	**260.4** 10.25	**82.6** 3.25	**24.9** 0.98	**16** 5/8	**93.2** 3.67	**6.5** 0.26	**15.2** 0.60	**81.0** 3.19	**103.9** 4.09	**9.1** 20
QVPR14V207S QVVPR14V207S	2 7/16 in.																	
QVPR14V208S QVVPR14V208S	2 1/2 in.																	
QVPR14V065S QVVPR14V065S	**65 mm**																	
QVPR16V211S QVVPR16V211S	2 11/16 in.	22216	**79.5** 3.13	**164.3** 6.47	**106.4** 4.19	**203.2** 8.00	**243.8** 9.60	**54.1** 2.13	**275.1** 10.83	**85.9** 3.38	**29.5** 1.16	**16** 5/8	**96.0** 3.78	**6.1** 0.24	**15.2** 0.60	**83.6** 3.29	**106.2** 4.18	**12.2** 27
QVPR16V212S QVVPR16V212S	2 3/4 in.																	
QVPR16V070S QVVPR16V070S	**70 mm**																	
QVPR16V215S QVVPR16V215S	2 15/16 in.																	
QVPR16V300S QVVPR16V300S	3 in.																	
QVPR16V075S QVVPR16V075S	**75 mm**																	
QVPR19V303S QVVPR19V303S	3 3/16 in.	22219	**95.3** 3.75	**195.3** 7.69	**124.5** 4.90	**235.0** 9.25	**285.8** 11.25	**60.5** 2.38	**346.2** 13.63	**95.3** 3.75	**39.6** 1.56	**20** 3/4	**106.4** 4.19	**7.8** 0.31	**14.5** 0.57	**93.7** 3.69	**117.6** 4.63	**22.2** 49
QVPR19V304S QVVPR19V304S	3 1/4 in.																	
QVPR19V080S QVVPR19V080S	**80 mm**																	
QVPR19V085S QVVPR19V085S	**85 mm**																	
QVPR19V307S QVVPR19V307S	3 7/16 in.																	
QVPR19V308S QVVPR19V308S	3 1/2 in.																	
QVPR19V090S QVVPR19V090S	**90 mm**																	

[1]Bearing part numbers use QV to designate single-nut units (uses Rv and Sv dimensions) and QVV to designate double-nut units (uses Rvv and Svv dimensions).
[2]Single-nut (QV) part number shown. Double-nut (QVV) version available upon request.

QVPX AND QVVPX 5000 SERIES FOUR-BOLT PILLOW BLOCKS – STRAIGHT BORE EQUIVALENT

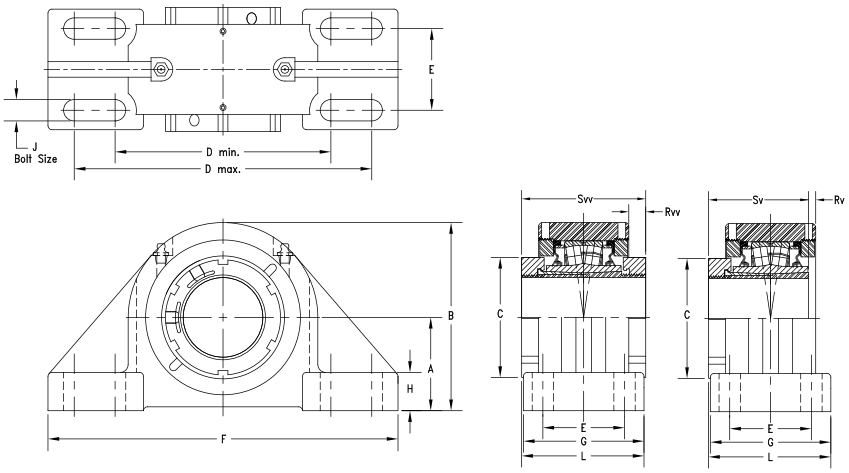

Bearing Part No.[1][2]	Shaft Dia.	Bearing No.	A	B	C	D min.	D max.	E	F	G	H	J	L	Rv[1]	Rvv	Sv[1]	Svv	Wt.
	mm in.		mm in.	mm in.	mm in.	mm in.	mm in.	mm in.	mm in.	mm in.	mm in.	mm in.	mm in.	mm in.	mm in.	mm in.	mm in.	kg lbs.
QVPX14V060S QVVPX14V060S	**60 mm**	22214	**76.2** 3.00	**153.7** 6.05	**94.0** 3.70	**176.3** 6.94	**242.8** 9.56	**66.8** 2.63	**285.8** 11.25	**98.6** 3.88	**31.0** 1.23	**16** 5/8	**101.3** 3.99	**6.5** 0.26	**15.2** 0.60	**81.0** 3.19	**103.9** 4.09	**10.4** 23
QVPX14V207S QVVPX14V207S	2 7/16 in.																	
QVPX14V208S QVVPX14V208S	2 1/2 in.																	
QVPX14V065S QVVPX14V065S	**65 mm**																	
QVPX16V211S QVVPX16V211S	2 11/16 in.	22216	**88.9** 3.50	**173.5** 6.83	**106.4** 4.19	**230.1** 9.06	**265.2** 10.44	**69.9** 2.75	**330.2** 13.00	**108.0** 4.25	**39.1** 1.54	**20** 3/4	**107.2** 4.22	**7.2** 0.28	**14.2** 0.56	**83.6** 3.29	**106.2** 4.18	**12.7** 28
QVPX16V212S QVVPX16V212S	2 3/4 in.																	
QVPX16V070S QVVPX16V070S	**70 mm**																	
QVPX16V215S QVVPX16V215S	2 15/16 in.																	
QVPX16V300S QVVPX16V300S	3 in.																	
QVPX16V075S QVVPX16V075S	**75 mm**																	
QVPX19V303S QVVPX19V303S	3 3/16 in.	22219	**101.6** 4.00	**201.2** 7.92	**124.5** 4.90	**274.6** 10.81	**309.6** 12.19	**76.2** 3.00	**381.0** 15.00	**120.7** 4.75	**38.1** 1.50	**20** 3/4	**119.1** 4.69	**7.8** 0.31	**14.5** 0.57	**93.7** 3.69	**117.** 4.63	**22.2** 49
QVPX19V304S QVVPX19V304S	3 1/4 in.																	
QVPX19V080S QVVPX19V080S	**80 mm**																	
QVPX19V085S QVVPX19V085S	**85 mm**																	
QVPX19V307S QVVPX19V307S	3 7/16 in.																	
QVPX19V308S QVVPX19V308S	3 1/2 in.																	
QVPX19V090S QVVPX19V090S	**90 mm**																	

[1]Bearing part numbers use QV to designate single-nut units (uses Rv and Sv dimensions) and QVV to designate double-nut units (uses Rvv and Svv dimensions).
[2]Single-nut (QV) part number shown. Double-nut (QVV) version available upon request.

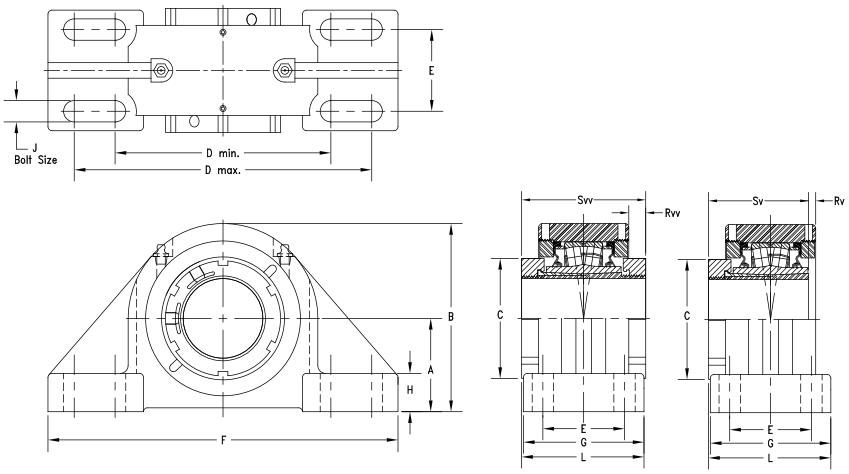

Bearing Part No.[1][2]	Shaft Dia.	Bearing No.	A	B	C	D min.	D max.	E	F	G	H	J	L	Rv[1]	Rvv	Sv[1]	Svv	Wt.
	mm in.		**mm** in.	**mm** in.	**mm** in.	**mm** in.	**mm** in.	**mm** in.	**mm** in.	**mm** in.	**mm** in.	**mm** in.	**mm** in.	**mm** in.	**mm** in.	**mm** in.	**mm** in.	**kg** lbs.
QVPX22V311S QVVPX22V311S	3 1⁄16 in.	22222	**127.0** 5.00	**239.8** 9.44	**139.7** 5.50	**317.5** 12.50	**355.6** 14.00	**88.9** 3.50	**425.5** 16.75	**139.7** 5.50	**41.4** 1.63	**24** 7⁄8	**135.1** 5.32	**8.2** 0.32	**15.2** 0.60	**104.9** 4.13	**130.3** 5.13	**30.4** 67
QVPX22V312S QVVPX22V312S	3 3⁄4 in.																	
QVPX22V100S QVVPX22V100S	**100 mm**																	
QVPX22V315S QVVPX22V315S	3 15⁄16 in.																	
QVPX22V400S QVVPX22V400S	4 in.																	
QVPX26V110S QVVPX26V110S	**110 mm**	22226	**146.1** 5.75	**273.8** 10.78	**174.8** 6.88	**354.1** 13.94	**395.2** 15.56	**101.6** 4.00	**469.9** 18.50	**158.8** 6.25	**45.7** 1.80	**24** 1	**168.7** 6.64	**7.9** 0.31	**38.4** 1.51	**147.8** 5.82	**178.3** 7.02	**37.2** 82
QVPX26V407S QVVPX26V407S	4 7⁄16 in.																	
QVPX26V408S QVVPX26V408S	4 1⁄2 in.																	
QVPX26V115S QVVPX26V115S	**115 mm**																	
QVPX28V125S QVVPX28V125S	**125 mm**	22228	**155.6** 6.125	**293.4** 11.55	**190.0** 7.48	**387.4** 15.25	**425.5** 16.75	**108.0** 4.25	**514.4** 20.25	**171.5** 6.75	**50.8** 2.00	**24** 1 1⁄8	**175.0** 6.89	**0.2** 0.01	**30.7** 1.21	**147.8** 5.82	**178.3** 7.02	**61.7** 136
QVPX28V415S QVVPX28V415S	4 15⁄16 in.																	
QVPX28V500S QVVPX28V500S	5 in.																	
QVPX28V130S QVVPX28V130S	**130 mm**																	

[1]Bearing part numbers use QV to designate single-nut units (uses Rv and Sv dimensions) and QVV to designate double-nut units (uses Rvv and Svv dimensions).
[2]Single-nut (QV) part number shown. Double-nut (QVV) version available upon request.

QVPG AND QVVPG SN-STYLE FOUR-BOLT PILLOW BLOCKS – TAPERED BORE EQUIVALENT

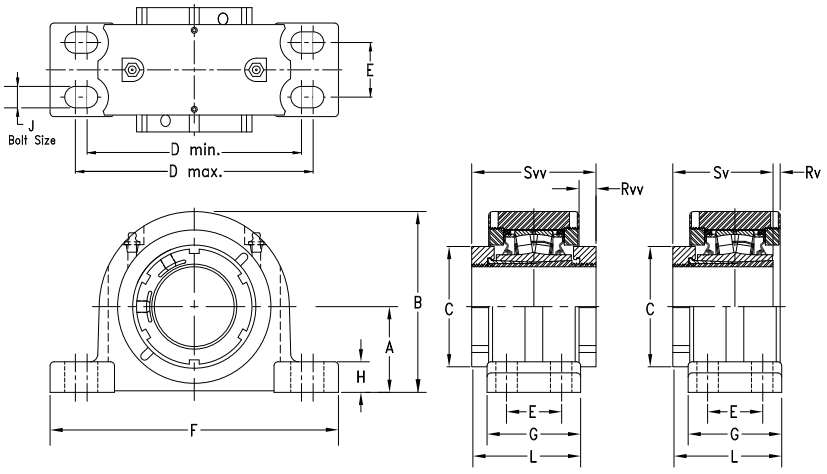

Bearing Part No. [1][2]	Shaft Dia.	Bearing No.	A	B	C	D min.	D max.	E	F	G	H	J	L	Rv[1]	Rvv	Sv[1]	Svv	Wt.
	mm in.		mm in.	mm in.	mm in.	mm in.	mm in.	mm in.	mm in.	mm in.	mm in.	mm in.	mm in.	mm in.	mm in.	mm in.	mm in.	kg lbs.
QVPG11V115S QVVPG11V115S	1 15/16 in.	22211	**69.9** 2.75	**134.9** 5.31	**75.9** 2.99	**182.4** 7.18	**217.4** 8.56	**39.9** 1.57	**251.0** 9.88	**68.6** 2.70	**31.8** 1.25	**16** 5/8	**85.3** 3.36	**1.4** 0.06	**20.8** 0.82	**79.8** 3.14	**102.1** 4.02	**8.6** 19
QVPG11V200S QVVPG11V200S	2 in.																	
QVPG11V050S QVVPG11V050S	**50 mm**																	
QVPG12V055S QVVPG12V055S	**55 mm**	22212	**70.0** 2.756	**140.5** 5.53	**80.0** 3.16	**177.8** 7.00	**219.2** 8.63	**35.1** 1.38	**254.0** 10.00	**69.9** 2.75	**31.8** 1.25	**12** 1/2	**86.1** 3.39	**1.4** 0.06	**20.8** 0.82	**79.8** 3.14	**102.1** 4.02	**9.9** 22
QVPG13V203S QVVPG13V203S	2 3/16 in.	22213	**80.0** 3.15	**154.9** 6.10	**80.3** 3.16	**182.4** 7.18	**217.4** 8.56	**48.0** 1.89	**261.9** 10.31	**82.6** 3.25	**35.1** 1.38	**16** 5/8	**92.5** 3.64	**0.2** 0.67	**17.0** 0.01	**85.3** 0.67	**102.1** 3.36	**11.3** 25
QVPG13V204S QVVPG13V204S	2 1/4 in.																	
QVPG14V060S QVVPG14V060S	**60 mm**	22214	**80.0** 3.15	**154.9** 6.20	**94.0** 3.70	**182.4** 7.18	**217.4** 8.56	**48.0** 1.89	**261.9** 10.31	**82.6** 3.25	**35.1** 1.38	**16** 5/8	**93.2** 3.67	**6.6** 0.26	**13.7** 0.54	**81.0** 3.19	**103.9** 4.09	**11.3** 25
QVPG15V207S QVVPG15V207S	2 7/16 in.	22215	**80.0** 3.15	**162.1** 6.38	**94.0** 3.70	**201.7** 7.94	**246.1** 9.69	**39.6** 1.56	**276.4** 10.88	**79.5** 3.13	**30.2** 1.19	**16** 5/8	**91.7** 3.61	**4.7** 0.26	**15.7** 0.62	**81.0** 3.19	**103.9** 4.09	**13.2** 29
QVPG15V208S QVVPG15V208S	2 1/2 in.																	
QVPG15V065S QVVPG15V065S	**65 mm**																	
QVPG16V211S QVVPG16V211S	2 11/16 in.	22216	**95.0** 3.74	**180.3** 7.10	**105.9** 4.17	**235.0** 9.25	**266.7** 10.50	**50.0** 1.97	**315.0** 12.4	**89.9** 3.54	**31.8** 1.25	**16** 5/8	**98.0** 3.86	**4.5** 0.18	**16.8** 0.66	**83.6** 3.29	**105.9** 4.17	**14.9** 33
QVPG16V212S QVVPG16V212S	2 3/4 in.																	
QVPG16V070S QVVPG16V070S	**70 mm**																	
QVPG17V215S QVVPG17V215S	2 15/16 in.	22217	**95.0** 3.74	**182.9** 7.20	**106.4** 4.19	**240.0** 9.44	**287.3** 11.31	**52.3** 2.06	**320.8** 12.63	**92.2** 3.63	**31.8** 1.25	**20** 3/4	**99.3** 3.91	**6.6** 0.26	**15.0** 0.59	**84.6** 3.33	**106.2** 4.18	**16.8** 37
QVPG17V300S QVVPG17V300S	3 in.																	
QVPG17V075S QVVPG17V075S	**75 mm**																	
QVPG19V303S QVVPG19V303S	3 3/16 in.	22219	**100.0** 3.937	**195.3** 7.69	**124.0** 4.88	**282.7** 11.13	**298.5** 11.75	**50.0** 1.97	**344.9** 13.58	**100.1** 3.94	**39.6** 1.56	**16** 5/8	**109.2** 4.30	**7.2** 0.29	**19.3** 0.76	**93.7** 3.69	**118.1** 4.65	**24.5** 54
QVPG19V304S QVVPG19V304S	3 1/4 in.																	
QVPG19V080S QVVPG19V080S	**80 mm**																	

[1]Bearing part numbers use QV to designate single-nut units (uses Rv and Sv dimensions) and QVV to designate double-nut units (uses Rvv and Svv dimensions).
[2]Single-nut (QV) part number shown. Double-nut (QVV) version available upon request.

Continued on next page.

QVPG AND QVVPG SN-STYLE FOUR-BOLT PILLOW BLOCKS – TAPERED BORE EQUIVALENT *– continued*

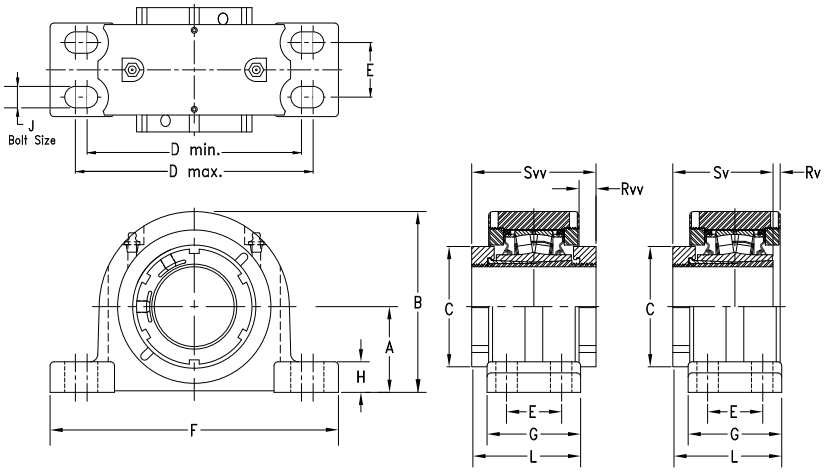

Bearing Part No. [1][2]	Shaft Dia.	Bearing No.	A	B	C	D min.	D max.	E	F	G	H	J	L	Rv[1]	Rvv	Sv[1]	Svv	Wt.
	mm in.		**mm** in.	**mm** in.	**mm** in.	**mm** in.	**mm** in.	**mm** in.	**mm** in.	**mm** in.	**mm** in.	**mm** in.	**mm** in.	**mm** in.	**mm** in.	**mm** in.	**mm** in.	**kg** lbs.
QVPG19V085S QVVPG19V085S	**85 mm**	22219	**112.0** 4.409	**212.3** 8.36	**124.0** 4.88	**282.7** 11.13	**298.5** 11.75	**50.0** 1.97	**344.9** 13.58	**100.1** 3.94	**39.6** 1.56	**16** 5/8	**109.2** 4.30	**4.7** 0.19	**17.8** 0.70	**93.7** 3.69	**118.1** 4.65	**25.4** 56
QVPG20V307S QVVPG20V307S	3 7/16 in.	22220	**112.0** 4.409	**214.6** 8.45	**124.5** 4.90	**276.4** 10.88	**339.9** 13.38	**60.5** 2.38	**381.0** 15.00	**109.5** 4.31	**39.6** 1.56	**20** 3/4	**113.5** 4.47	**11.0** 0.43	**11.2** 0.44	**95.3** 3.75	**117.6** 4.63	**31.8** 70
QVPG20V308S QVVPG20V308S	3 1/2 in.																	
QVPG20V090S QVVPG20V090S	**90 mm**																	
QVVPG22V311S	3 11/16 in.	22222	**125.0** 4.921	**238.3** 9.38	**139.7** 5.50	**301.8** 11.88	**368.3** 14.50	**69.9** 2.75	**409.7** 16.13	**120.7** 4.75	**44.5** 1.75	**20** 3/4	**125.5** 4.94	**9.3** 0.36	**14.5** 0.57	**104.9** 4.13	**130.3** 5.13	**39.5** 87
QVVPG22V312S	3 3/4 in.																	
QVVPG22V100S	**100 mm**																	
QVVPG22V315S	3 15/16 in.																	
QVVPG22V400S	4 in.																	
QVVPG24V110S	**110 mm**	22224	**140.0** 5.512	**262.9** 10.35	**174.8** 6.88	**330.2** 13.00	**355.6** 14.00	**70.1** 2.76	**410.0** 16.14	**120.7** 4.75	**50.8** 2.00	**16** 5/8	**149.6** 5.89	**7.9** 0.31	**40.4** 1.59	**147.8** 5.82	**178.3** 7.02	**49.9** 110
QVVPG26V407S	4 7/16 in.	22226	**150.0** 5.906	**281.7** 11.09	**174.8** 6.88	**367.3** 14.46	**400.1** 15.75	**81.0** 3.19	**444.5** 17.50	**128.0** 5.04	**49.3** 1.94	**24** 1	**153.2** 6.03	**6.0** 0.24	**36.6** 1.44	**147.8** 5.82	**178.3** 7.02	**61.7** 136
QVVPG26V408S	4 1/2 in.																	
QVVPG26V115S	**115 mm**																	
QVVPG28V125S	**125 mm**	22228	**150.0** 5.906	**288.5** 11.36	**190.0** 7.48	**384.3** 15.13	**447.8** 17.63	**80.0** 3.15	**500.4** 19.70	**128.0** 5.04	**49.3** 1.94	**24** 1	**152.9** 6.02	**1.0** 0.04	**31.8** 1.25	**147.8** 5.82	**178.3** 7.02	**61.7** 136
QVVPG28V415S	4 15/16 in.																	
QVVPG28V500S	5 in.																	
QVVPG28V130S	**130 mm**																	

[1]Bearing part numbers use QV to designate single-nut units (uses Rv and Sv dimensions) and QVV to designate double-nut units (uses Rvv and Svv dimensions).
[2]Single-nut (QV) part number shown. Double-nut (QVV) version available upon request.

QVPH AND QVVPH SAF-STYLE FOUR-BOLT PILLOW BLOCKS – TAPERED BORE EQUIVALENT

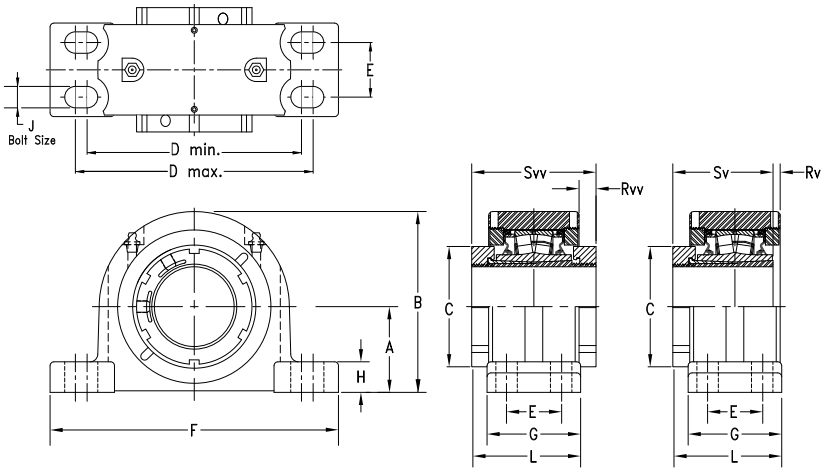

Bearing Part No.[1][2]	Shaft Dia.	Bearing No.	A	B	C	D min.	D max.	E	F	G	H	J	L	Rv[1]	Rvv	Sv[1]	Svv	Wt.
	mm in.		**mm** in.	**mm** in.	**mm** in.	**mm** in.	**mm** in.	**mm** in.	**mm** in.	**mm** in.	**mm** in.	**mm** in.	**mm** in.	**mm** in.	**mm** in.	**mm** in.	**mm** in.	**kg** lbs.
QVPH11V115S QVVPH11V115S	1 15/16 in.	22211	**69.9** 2.75	**134.9** 5.31	**75.9** 2.99	**182.4** 7.18	**217.4** 8.56	**39.9** 1.57	**251.0** 9.88	**68.6** 2.70	**31.8** 1.25	**16** 5/8	**85.3** 3.36	**1.4** 0.06	**20.8** 0.82	**79.8** 3.14	**102.1** 4.02	**8.6** 19
QVPH11V200S QVVPH11V200S	2 in.																	
QVPH11V050S QVVPH11V050S	**50 mm**																	
QVPH13V203S QVVPH13V203S	2 3/16 in.	22213	**76.2** 3.00	**151.1** 5.95	**80.3** 3.16	**182.4** 7.18	**217.4** 8.56	**50.8** 2.00	**261.9** 10.31	**82.6** 3.25	**31.2** 1.23	**12** 1/2	**92.5** 3.64	**0.2** 0.01	**17.0** 0.67	**85.3** 3.36	**102.1** 4.02	**11.3** 25
QVPH13V204S QVVPH13V204S	2 1/4 in.																	
QVPH13V055S QVVPH13V055S	**55 mm**																	
QVPH15V060S QVVPH15V060S	**60 mm**	22215	**82.6** 3.25	**162.1** 6.38	**94.0** 3.70	**201.7** 7.94	**246.1** 9.69	**47.8** 1.88	**276.4** 10.88	**79.5** 3.13	**32.8** 1.29	**12** 1/2	**91.7** 3.61	**4.7** 0.19	**18.0** 0.71	**82.6** 3.25	**103.9** 4.09	**13.2** 29
QVPH15V207S QVVPH15V207S	2 7/16 in.																	
QVPH15V208S QVVPH15V208S	2 1/2 in.																	
QVPH15V065S QVVPH15V065S	**65 mm**																	
QVPH16V211S QVVPH16V211S	2 11/16 in.	22216	**88.9** 3.50	**176.7** 6.96	**109.2** 4.30	**228.6** 9.00	**279.4** 11.00	**54.0** 2.13	**300.2** 13.00	**72.6** 2.86	**31.8** 1.25	**16** 5/8	**96.3** 3.79	**4.5** 0.18	**15.5** 0.61	**83.6** 3.29	**103.9** 4.09	**14.9** 33
QVPH16V212S QVVPH16V212S	2 3/4 in.																	
QVPH16V070S QVVPH16V070S	**70 mm**																	
QVPH17V215S QVVPH17V215S	2 15/16 in.	22217	**95.3** 3.75	**182.9** 7.20	**106.4** 4.19	**240.0** 9.44	**287.3** 11.31	**54.1** 2.13	**320.8** 12.63	**92.2** 3.63	**32.0** 1.26	**16** 5/8	**99.3** 3.91	**6.6** 0.26	**15.0** 0.59	**84.6** 3.33	**106.2** 4.18	**16.8** 37
QVPH17V300S QVVPH17V300S	3 in.																	
QVPH17V075S QVVPH17V075S	**75 mm**																	
QVPH19V303S QVVPH19V303S	3 3/16 in.	22219	**101.6** 4.00	**202.2** 7.96	**124.5** 4.90	**254.0** 10.00	**298.5** 11.75	**54.0** 2.13	**349.3** 13.75	**98.4** 3.88	**41.3** 1.63	**16** 5/8	**106.3** 4.18	**3.2** 0.13	**17.2** 0.68	**93.7** 3.69	**114.1** 4.49	**24.5** 54
QVPH19V304S QVVPH19V304S	3 1/4 in.																	
QVPH19V080S QVVPH19V080S	**80 mm**																	

[1]Bearing part numbers use QV to designate single-nut units (uses Rv and Sv dimensions) and QVV to designate double-nut units (uses Rvv and Svv dimensions).
[2]Single-nut (QV) part number shown. Double-nut (QVV) version available upon request.

Continued on next page.

QVPH AND QVVPH SAF-STYLE FOUR-BOLT PILLOW BLOCKS – TAPERED BORE EQUIVALENT *– continued*

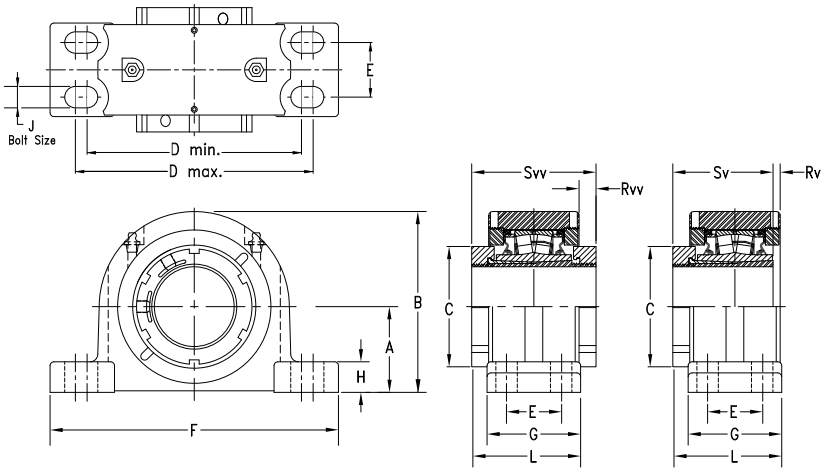

Bearing Part No.[1][2]	Shaft Dia.	Bearing No.	A	B	C	D min.	D max.	E	F	G	H	J	L	Rv[1]	Rvv	Sv[1]	Svv	Wt.
	mm in.		**mm** in.	**mm** in.	**mm** in.	**mm** in.	**mm** in.	**mm** in.	**mm** in.	**mm** in.	**mm** in.	**mm** in.	**mm** in.	**mm** in.	**mm** in.	**mm** in.	**mm** in.	**kg** lbs.
QVPH20V303S QVVPH20V303S	3 3⁄16 in.	22220	**114.3** 4.50	**216.9** 8.54	**124.5** 4.90	**276.4** 10.88	**339.9** 13.38	**60.5** 2.38	**381.0** 15.00	**109.5** 4.31	**41.9** 1.65	**20** 3⁄4	**113.5** 4.47	**11.0** 0.43	**11.2** 0.44	**95.3** 3.75	**117.6** 4.63	**31.8** 70
QVPH20V304S QVVPH20V304S	3 1⁄4 in.																	
QVPH20V080S QVVPH20V080S	**80 mm**																	
QVPH20V085S QVVPH20V085S	**85 mm**																	
QVPH20V307S QVVPH20V307S	3 7⁄16 in.																	
QVPH20V308S QVVPH20V308S	3 1⁄2 in.																	
QVPH20V090S QVVPH20V090S	**90 mm**																	
QVPH22V311S QVVPH22V311S	3 11⁄16 in.	22222	**125.5** 4.94	**238.3** 9.38	**139.7** 5.50	**301.8** 11.88	**368.3** 14.50	**69.9** 2.75	**406.4** 16.00	**120.7** 4.75	**45.0** 1.77	**20** 3⁄4	**125.5** 4.94	**9.3** 0.36	**14.5** 0.57	**104.9** 4.13	**130.3** 5.13	**39.5** 87
QVPH22V312S QVVPH22V312S	3 3⁄4 in.																	
QVPH22V100S QVVPH22V100S	**100 mm**																	
QVPH22V315S QVVPH22V315S	3 15⁄16 in.																	
QVPH22V400S QVVPH22V400S	4 in.																	
QVPH24V110S QVVPH24V110S	**110 mm**	22224	**133.4** 5.25	**256.8** 10.11	**174.6** 6.87	**301.8** 11.88	**368.3** 14.50	**69.9** 2.75	**419.1** 16.50	**120.7** 4.75	**50.8** 2.00	**20** 3⁄4	**149.5** 5.89	**9.8** 0.38	**40.3** 1.59	**147.8** 5.82	**178.3** 7.02	**49.9** 110
QVPH26V407S QVVPH26V407S	4 7⁄16 in.	22226	**152.4** 6.00	**284.0** 11.18	**174.8** 6.88	**362.0** 14.25	**400.1** 15.75	**82.6** 3.25	**444.5** 17.50	**128.0** 5.04	**51.8** 2.04	**22** 7⁄8	**153.2** 6.03	**6.6** 0.25	**36.6** 1.44	**147.8** 5.82	**178.3** 7.02	**61.7** 136
QVPH26V408S QVVPH26V408S	4 1⁄2 in.																	
QVPH26V115S QVVPH26V115S	**115 mm**																	
QVPH28V125S QVVPH28V125S	**125 mm**	22228	**152.4** 6.00	**290.8** 11.45	**190.0** 7.48	**406.4** 16.00	**435.1** 17.13	**85.9** 3.38	**500.4** 19.70	**128.0** 5.04	**51.8** 2.04	**24** 1	**152.9** 6.02	**1.0** 0.04	**31.8** 1.25	**147.8** 5.82	**178.3** 7.02	**61.7** 136
QVPH28V415S QVVPH28V415S	4 15⁄16 in.																	
QVPH28V500S QVVPH28V500S	5 in.																	
QVPH28V130S QVVPH28V130S	**130 mm**																	

[1]Bearing part numbers use QV to designate single-nut units (uses Rv and Sv dimensions) and QVV to designate double-nut units (uses Rvv and Svv dimensions).
[2]Single-nut (QV) part number shown. Double-nut (QVV) version available upon request.

QVPK AND QVVPK 9000 SERIES FOUR-BOLT PILLOW BLOCKS – TAPERED BORE EQUIVALENT

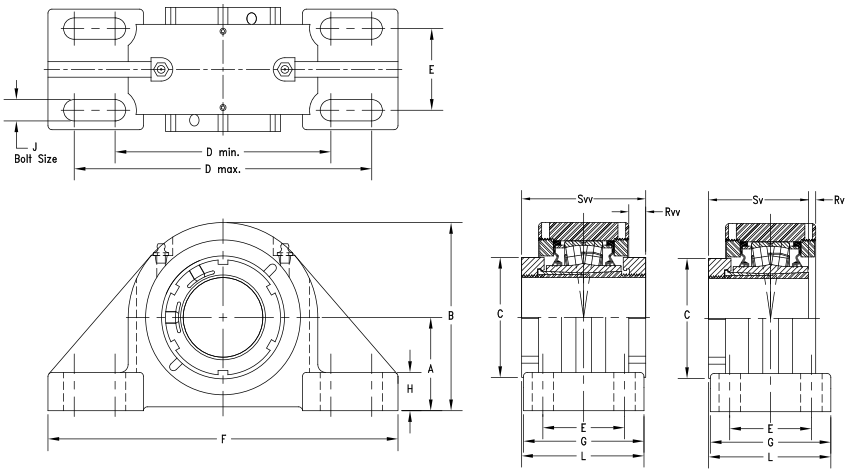

Bearing Part No.[1][2]	Shaft Dia.	Bearing No.	A	B	C	D min.	D max.	E	F	G	H	J	L	Rv[1]	Rvv	Sv[1]	Svv	Wt.
	mm in.		**mm** in.	**mm** in.	**mm** in.	**mm** in.	**mm** in.	**mm** in.	**mm** in.	**mm** in.	**mm** in.	**mm** in.	**mm** in.	**mm** in.	**mm** in.	**mm** in.	**mm** in.	**kg** lbs.
QVPK15V060S QVVPK15V060S	**60 mm**	22215	**88.9** 3.50	**176.0** 6.83	**94.0** 3.70	**230.1** 9.06	**265.2** 10.44	**69.9** 2.75	**330.2** 13.00	**108.0** 4.25	**39.1** 1.54	**20** 3/4	**105.9** 4.17	**8.3** 0.33	**12.6** 0.51	**82.6** 3.25	**103.9** 4.09	**13.2** 29
QVPK15V207S QVVPK15V207S	2 7/16 in.																	
QVPK15V208S QVVPK15V208S	2 1/2 in.																	
QVPK15V065S QVVPK15V065S	**65 mm**																	
QVPK17V211S QVVPK17V211S	2 11/16 in.	22217	**101.6** 4.00	**201.2** 7.92	**106.4** 4.19	**274.6** 10.81	**309.6** 12.19	**76.2** 3.00	**381.0** 15.00	**120.7** 4.75	**38.1** 1.50	**20** 3/4	**113.5** 4.47	**13.0** 0.51	**8.64** 0.34	**84.6** 3.33	**106.2** 4.18	**16.8** 37
QVPK17V212S QVVPK17V212S	2 3/4 in.																	
QVPK17V070S QVVPK17V070S	**70 mm**																	
QVPK17V215S QVVPK17V215S	2 15/16 in.																	
QVPK17V300S QVVPK17V300S	3 in.																	
QVPK17V075S QVVPK17V075S	**75 mm**																	
QVPK20V303S QVVPK20V303S	3 3/16 in.	22220	**127.0** 5.00	**240.0** 9.44	**124.5** 4.90	**317.5** 12.50	**355.6** 14.00	**88.9** 3.50	**425.5** 16.75	**139.7** 5.50	**41.4** 1.63	**24** 7/8	**128.8** 5.07	**13.1** 0.52	**8.9** 0.35	**95.3** 3.75	**117.6** 4.63	**31.8** 70
QVPK20V304S QVVPK20V304S	3 1/4 in.																	
QVPK20V080S QVVPK20V080S	**80 mm**																	
QVPK20V085S QVVPK20V085S	**85 mm**																	
QVPK20V307S QVVPK20V307S	3 7/16 in.																	
QVPK20V308S QVVPK20V308S	3 1/2 in.																	
QVPK20V090S QVVPK20V090S	**90 mm**																	

[1]Bearing part numbers use QV to designate single-nut units (uses Rv and Sv dimensions) and QVV to designate double-nut units (uses Rvv and Svv dimensions).
[2]Single-nut (QV) part number shown. Double-nut (QVV) version available upon request.

Continued on next page.

QVPK AND QVVPK 9000 SERIES FOUR-BOLT PILLOW BLOCKS – TAPERED BORE EQUIVALENT *– continued*

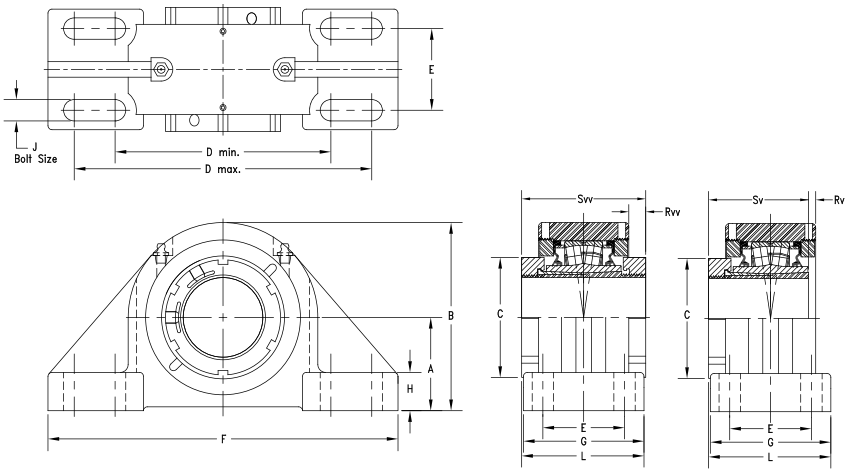

Bearing Part No.[1][2]	Shaft Dia.	Bearing No.	A	B	C	D min.	D max.	E	F	G	H	J	L	Rv[1]	Rvv	Sv[1]	Svv	Wt.
	mm in.		**mm** in.	**mm** in.	**mm** in.	**mm** in.	**mm** in.	**mm** in.	**mm** in.	**mm** in.	**mm** in.	**mm** in.	**mm** in.	**mm** in.	**mm** in.	**mm** in.	**mm** in.	**kg** lbs.
QVPK22V311S QVVPK22V311S	3 1⁄16 in.	22222	**146.1** 5.75	**273.8** 10.78	**139.7** 5.50	**354.1** 13.94	**395.2** 15.56	**101.6** 4.00	**469.9** 18.50	**158.8** 6.25	**45.7** 1.80	**24** 1	**138.4** 5.45	**9.3** 0.36	**14.5** 0.57	**104.9** 4.13	**130.3** 5.13	**39.5** 87
QVPK22V312S QVVPK22V312S	3 3⁄4 in.																	
QVPK22V100S QVVPK22V100S	**100 mm**																	
QVPK22V315S QVVPK22V315S	3 15⁄16 in.																	
QVPK22V400S QVVPK22V400S	4 in.																	
QVPK26V110S QVVPK26V110S	**110 mm**	22226	**155.7** 6.13	**283.2** 11.15	**174.8** 6.88	**387.4** 15.25	**425.5** 16.75	**108.0** 4.25	**514.4** 20.25	**171.5** 6.75	**50.8** 2.00	**24** 1	**175.3** 6.90	**1.5** 0.06	**31.5** 1.24	**147.8** 5.82	**178.3** 7.02	**61.7** 136
QVPK26V407S QVVPK26V407S	4 7⁄16 in.																	
QVPK26V408S QVVPK26V408S	4 1⁄2 in.																	
QVPK26V115S QVVPK26V115S	**115 mm**																	

[1]Bearing part numbers use QV to designate single-nut units (uses Rv and Sv dimensions) and QVV to designate double-nut units (uses Rvv and Svv dimensions).
[2]Single-nut (QV) part number shown. Double-nut (QVV) version available upon request.

QVF AND QVVF SQUARE FLANGE BLOCKS – STRAIGHT BORE EQUIVALENT

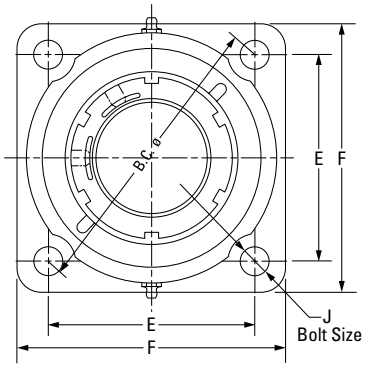

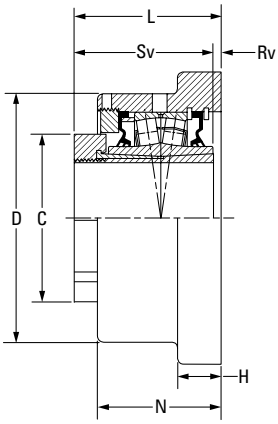

QV Single-Nut Unit[1]

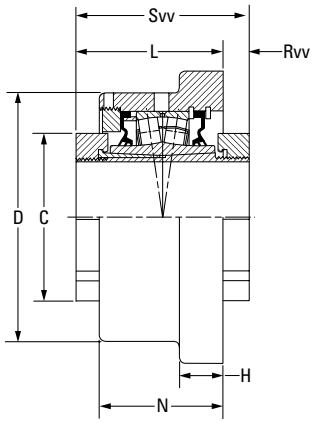

QVV Double-Nut Unit[1]

Bearing Part No.[1][2]	Shaft Dia.	Bearing No.	C	D	E	B.C.	F	H	J	L FIX	L EXP	N	Rv[1]	Rvv	Sv[1]	Svv	Wt.
	mm in.		**mm** in.	**mm** in.	**mm** in.	**mm** in.	**mm** in.	**mm** in.	**mm** in.	**mm** in.	**mm** in.	**mm** in.	**mm** in.	**mm** in.	**mm** in.	**mm** in.	**kg** lbs.
QVF11V115S QVVF11V115S	1 15/16 in.	22211	**75.9** 2.99	**120.7** 4.75	**111.3** 4.38	**157.0** 6.18	**139.7** 5.50	**22.4** 0.88	**12** 1/2	**84.1** 3.31	**86.1** 3.39	**65.0** 2.56	**4.1** 0.16	**18.3** 0.72	**79.8** 3.14	**102.1** 4.02	**5.0** 11
QVF11V200S QVVF11V200S	2 in.																
QVF11V050S QVVF11V050S	**50 mm**																
QVF12V203S QVVF12V203S	2 3/16 in.	22212	**80.3** 3.16	**130.3** 5.13	**124.0** 4.88	**175.0** 6.89	**157.2** 6.19	**25.4** 1.00	**16** 5/8	**84.3** 3.32	**86.4** 3.40	**66.8** 2.63	**4.6** 0.18	**17.8** 0.70	**79.8** 3.14	**102.1** 4.02	**6.4** 14
QVF12V204S QVVF12V204S	2 1/4 in.																
QVF12V055S QVVF12V055S	**55 mm**																
QVF14V060S QVVF14V060S	**60 mm**	22214	**94.0** 3.70	**146.1** 5.75	**136.7** 5.38	**193.0** 7.60	**168.4** 6.63	**25.4** 1.00	**16** 5/8	**85.1** 3.35	**87.1** 3.43	**72.4** 2.85	**4.1** 0.16	**16.0** 0.63	**81.0** 3.19	**101.3** 3.99	**7.7** 17
QVF14V207S QVVF14V207S	2 7/16 in.																
QVF14V208S QVVF14V208S	2 1/2 in.																
QVF14V065S QVVF14V065S	**65 mm**																
QVF16V211S QVVF16V211S	2 11/16 in.	22216	**106.4** 4.19	**168.9** 6.65	**152.4** 6.00	**215.4** 8.48	**189.0** 7.44	**26.9** 1.06	**20** 3/4	**87.6** 3.45	**89.7** 3.53	**75.7** 2.98	**4.1** 0.16	**16.3** 0.64	**83.6** 3.29	**103.6** 4.08	**10.4** 23
QVF16V212S QVVF16V212S	2 3/4 in.																
QVF16V070S QVVF16V070S	**70 mm**																
QVF16V215S QVVF16V215S	2 15/16 in.																
QVF16V300S QVVF16V300S	3 in.																
QVF16V075S QVVF16V075S	**75 mm**																

[1]Bearing part numbers use QV to designate single-nut units (uses Rv and Sv dimensions) and QVV to designate double-nut units (uses Rvv and Svv dimensions).
[2]Single-nut (QV) part number shown. Double-nut (QVV) version available upon request.

Continued on next page.

QVF AND QVVF SQUARE FLANGE BLOCKS – STRAIGHT BORE EQUIVALENT *– continued*

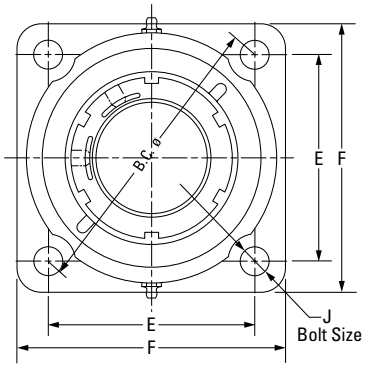

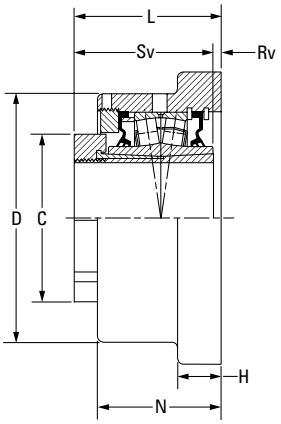

QV Single-Nut Unit[1]

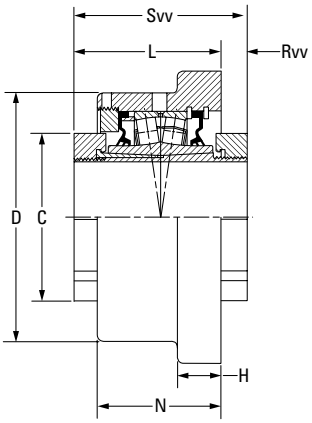

QVV Double-Nut Unit[1]

Bearing Part No.[1][2]	Shaft Dia.	Bearing No.	C	D	E	B.C.	F	H	J	L FIX	L EXP	N	Rv[1]	Rvv	Sv[1]	Svv	Wt.
	mm in.		**mm** in.	**mm** in.	**mm** in.	**mm** in.	**mm** in.	**mm** in.	**mm** in.	**mm** in.	**mm** in.	**mm** in.	**mm** in.	**mm** in.	**mm** in.	**mm** in.	**kg** lbs.
QVF19V303S QVVF19V303S	3 3⁄16 in.	22219															
QVF19V304S QVVF19V304S	3 1⁄4 in.																
QVF19V080S QVVF19V080S	**80 mm**		**124.5**	**193.8**	**177.8**	**251.7**	**219.2**	**33.3**	**20**	**98.3**	**100.3**	**84.1**	**4.6**	**15.7**	**93.7**	**114.0**	**15.9**
QVF19V085S QVVF19V085S	**85 mm**		4.90	7.63	7.00	9.91	8.63	1.31	3⁄4	3.87	3.95	3.31	0.18	0.62	3.69	4.49	35
QVF19V307S QVVF19V307S	3 7⁄16 in.																
QVF19V308S QVVF19V308S	3 1⁄2 in.																
QVF19V090S QVVF19V090S	**90 mm**																
QVF22V311S QVVF22V311S	3 11⁄16 in.	22222															
QVF22V312S QVVF22V312S	3 3⁄4 in.		**139.7**	**224.0**	**196.9**	**278.4**	**253.2**	**38.1**	**24**	**114.0**	**116.1**	**103.1**	**9.1**	**12.7**	**104.9**	**126.7**	**24.9**
QVF22V100S QVVF22V100S	**100 mm**		5.50	8.82	7.75	10.96	9.97	1.50	7⁄8	4.49	4.57	4.06	0.36	0.50	4.13	4.99	55
QVF22V315S QVVF22V315S	3 15⁄16 in.																
QVF22V400S QVVF22V400S	4 in.																
QVF26V110S QVVF26V110S	**110 mm**	22226															
QVF26V407S QVVF26V407S	4 7⁄16 in.		**174.8**	**256.8**	**222.3**	**314.5**	**276.4**	**38.1**	**24**	**140.5**	**142.7**	**106.9**	**7.4**	**37.8**	**147.8**	**178.3**	**28.6**
QVF26V408S QVVF26V408S	4 1⁄2 in.		6.88	10.11	8.75	12.38	10.88	1.50	7⁄8	5.53	5.62	4.21	0.29	1.49	5.82	7.02	63
QVF26V115S QVVF26V115S	**115 mm**																

[1]Bearing part numbers use QV to designate single-nut units (uses Rv and Sv dimensions) and QVV to designate double-nut units (uses Rvv and Svv dimensions).
[2]Single-nut (QV) part number shown. Double-nut (QVV) version available upon request.

QVFB AND QVVFB SQUARE FLANGE BLOCKS – TAPERED ADAPTER EQUIVALENT

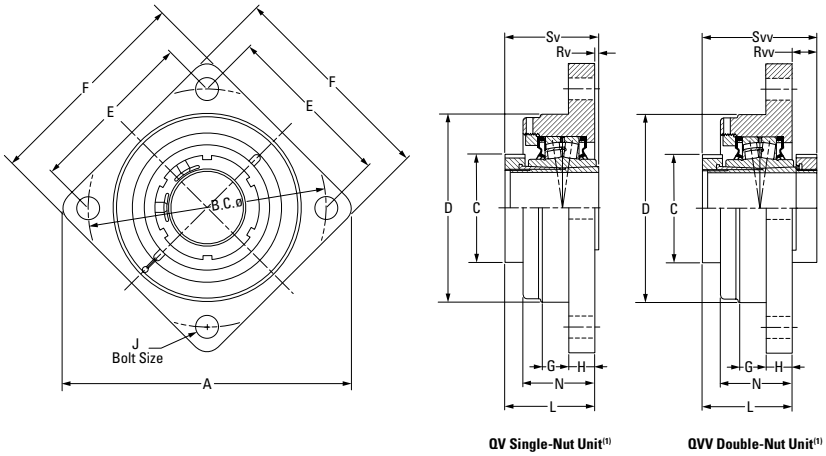

QV Single-Nut Unit[1] **QVV Double-Nut Unit[1]**

Bearing Part No.[1][2]	Shaft Dia.	Bearing No.	A	B.C.	C	D	E	F	G	H	J	L	N	Rv[1]	Rvv	Sv[1]	Svv	Wt.
	mm in.		**mm** in.	**mm** in.	**mm** in.	**mm** in.	**mm** in.	**mm** in.	**mm** in.	**mm** in.	**mm** in.	**mm** in.	**mm** in.	**mm** in.	**mm** in.	**mm** in.	**mm** in.	**kg** lbs.
QVFB15V060S QVVFB15V060S	**60 mm**	22215	**255.0** 10.04	**215.1** 8.47	**94.0** 3.70	**169.9** 6.69	**152.4** 6.00	**192.0** 7.56	**25.4** 1.00	**23.9** 0.94	**16** ⅝	**81.5** 3.21	**64.8** 2.55	**0.8** 0.03	**22.4** 0.88	**82.6** 3.25	**103.9** 4.09	**11.3** 25
QVFB15V207S QVVFB15V207S	2 7⁄16 in.																	
QVFB15V208S QVVFB15V208S	2 ½ in.																	
QVFB15V065S QVVFB15V065S	**65 mm**																	
QVFB17V211S QVVFB17V211S	2 11⁄16 in.	22217	**282.4** 11.12	**240.0** 9.45	**106.4** 4.19	**190.0** 7.48	**169.7** 6.68	**212.1** 8.35	**25.4** 1.00	**25.4** 1.00	**16** ⅝	**83.8** 3.30	**69.9** 2.75	**1.0** 0.04	**22.4** 0.88	**84.6** 3.33	**106.2** 4.18	**13.6** 30
QVFB17V212S QVVFB17V212S	2 ¾ in.																	
QVFB17V070S QVVFB17V070S	**70 mm**																	
QVFB17V215S QVVFB17V215S	2 15⁄16 in.																	
QVFB17V300S QVVFB17V300S	3 in.																	
QVFB17V075S QVVFB17V075S	**75 mm**																	
QVFB20V303S QVVFB20V303S	3 3⁄16 in.	22220	**330.2** 13.00	**279.9** 11.02	**124.5** 4.90	**230.1** 9.06	**197.9** 7.79	**247.9** 9.76	**31.8** 1.25	**28.7** 1.13	**20** ¾	**106.7** 4.20	**94.2** 3.71	**11.4** 0.45	**10.9** 0.43	**95.3** 3.75	**117.3** 4.62	**18.1** 40
QVFB20V304S QVVFB20V304S	3 ¼ in.																	
QVFB20V080S QVVFB20V080S	**80 mm**																	
QVFB20V085S QVVFB20V085S	**85 mm**																	
QVFB20V307S QVVFB20V307S	3 7⁄16 in.																	
QVFB20V308S QVVFB20V308S	3 ½ in.																	
QVFB20V090S QVVFB20V090S	**90 mm**																	

[1]Bearing part numbers use QV to designate single-nut units (uses Rv and Sv dimensions) and QVV to designate double-nut units (uses Rvv and Svv dimensions).
[2]Single-nut (QV) part number shown. Double-nut (QVV) version available upon request.

Continued on next page.

QVFB AND QVVFB SQUARE FLANGE BLOCKS – TAPERED ADAPTER EQUIVALENT

– continued

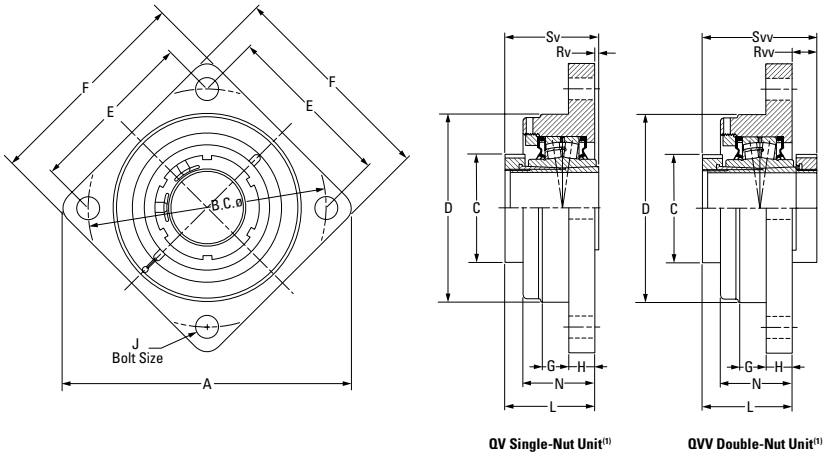

QV Single-Nut Unit[1] **QVV Double-Nut Unit[1]**

Bearing Part No.[1][2]	Shaft Dia.	Bearing No.	A	B.C.	C	D	E	F	G	H	J	L	N	Rv[1]	Rvv	Sv[1]	Svv	Wt.
	mm in.		**mm** in.	**mm** in.	**mm** in.	**mm** in.	**mm** in.	**mm** in.	**mm** in.	**mm** in.	**mm** in.	**mm** in.	**mm** in.	**mm** in.	**mm** in.	**mm** in.	**mm** in.	**kg** lbs.
QVFB22V311S QVVFB22V311S	3 11/16 in.	22222	**367.0** 14.45	**309.9** 12.20	**139.7** 5.50	**255.0** 10.04	**219.2** 8.63	**274.3** 10.80	**44.5** 1.75	**26.4** 1.04	**20** ¾	**112.0** 4.41	**101.1** 3.98	**7.4** 0.29	**14.7** 0.58	**104.9** 4.13	**126.7** 4.99	**27.2** 60
QVFB22V312S QVVFB22V312S	3 ¾ in.																	
QVFB22V100S QVVFB22V100S	**100 mm**																	
QVFB22V315S QVVFB22V315S	3 15/16 in.																	
QVFB22V400S QVVFB22V400S	4 in.																	
QVFB26V110S QVVFB26V110S	**110 mm**	22226	**416.1** 16.38	**355.1** 13.98	**174.8** 6.88	**290.1** 11.42	**251.0** 9.88	**298.5** 11.75	**41.9** 1.65	**32.0** 1.26	**24** ⅞	**148.3** 5.84	**114.3** 4.50	**0.5** 0.02	**30.0** 1.18	**147.8** 5.82	**178.3** 7.02	**42.6** 94
QVFB26V407S QVVFB26V407S	4 7/16 in.																	
QVFB26V408S QVVFB26V408S	4 ½ in.																	
QVFB26V115S QVVFB26V115S	**115 mm**																	

[1]Bearing part numbers use QV to designate single-nut units (uses Rv and Sv dimensions) and QVV to designate double-nut units (uses Rvv and Svv dimensions).
[2]Single-nut (QV) part number shown. Double-nut (QVV) version available upon request.

QVFC AND QVVFC PILOTED FLANGE CARTRIDGES – TAPERED ADAPTER EQUIVALENT

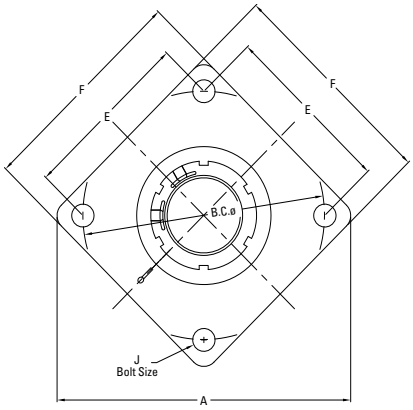

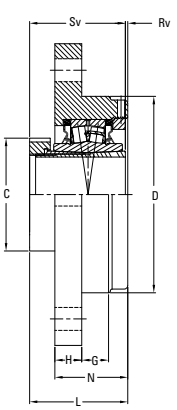

QV Single-Nut Unit[1]

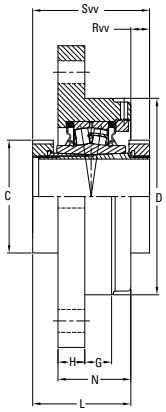

QVV Double-Nut Unit[1]

Bearing Part No.[1][2]	Shaft Dia.	Bearing No.	A	B.C.	C	D[3]	E	F	G	H	J	L	N	Rv[1]	Rvv	Sv[1]	Svv	Wt.
	mm in.		**mm** in.	**mm** in.	**mm** in.	**mm** in.	**mm** in.	**mm** in.	**mm** in.	**mm** in.	**mm** in.	**mm** in.	**mm** in.	**mm** in.	**mm** in.	**mm** in.	**mm** in.	**kg** lbs.
QVFC15V060S QVVFC15V060S	**60 mm**	22215	**255.0** 10.04	**215.1** 8.47	**94.0** 3.70	**169.9** 6.690	**152.4** 6.00	**192.0** 7.56	**25.4** 1.00	**23.9** 0.94	**16** ⅝	**87.1** 3.43	**64.8** 2.55	**4.6** 0.18	**16.8** 0.66	**82.6** 3.25	**103.9** 4.09	**11.3** 25
QVFC15V207S QVVFC15V207S	2 7⁄16 in.																	
QVFC15V208S QVVFC15V208S	2 ½ in.																	
QVFC15V065S QVVFC15V065S	**65 mm**																	
QVFC17V211S QVVFC17V211S	2 11⁄16 in.	22217	**282.4** 11.12	**240.0** 9.45	**106.4** 4.19	**190.0** 7.480	**169.7** 6.68	**212.1** 8.35	**25.4** 1.00	**25.4** 1.00	**16** ⅝	**91.7** 3.61	**69.9** 2.75	**6.6** 0.26	**14.5** 0.57	**84.6** 3.33	**106.2** 4.18	**13.6** 30
QVFC17V212S QVVFC17V212S	2 ¾ in.																	
QVFC17V070S QVVFC17V070S	**70 mm**																	
QVFC17V215S QVVFC17V215S	2 15⁄16 in.																	
QVFC17V300S QVVFC17V300S	3 in.																	
QVFC17V075S QVVFC17V075S	**75 mm**																	
QVFC20V303S QVVFC20V303S	3 3⁄16 in.	22220	**330.2** 13.00	**279.9** 11.02	**124.5** 4.90	**230.1** 9.060	**197.9** 7.79	**247.9** 9.76	**31.8** 1.25	**28.7** 1.13	**20** ¾	**105.2** 4.14	**94.2** 3.71	**9.7** 0.38	**12.4** 0.49	**95.3** 3.75	**117.3** 4.62	**18.1** 40
QVFC20V304S QVVFC20V304S	3 ¼ in.																	
QVFC20V080S QVVFC20V080S	**80 mm**																	
QVFC20V085S QVVFC20V085S	**85 mm**																	
QVFC20V307S QVVFC20V307S	3 7⁄16 in.																	
QVFC20V308S QVVFC20V308S	3 ½ in.																	
QVFC20V090S QVVFC20V090S	**90 mm**																	

[1]Bearing part numbers use QV to designate single-nut units (uses Rv and Sv dimensions) and QVV to designate double-nut units (uses Rvv and Svv dimensions).
[2]Single-nut (QV) part number shown. Double-nut (QVV) version available upon request.

Continued on next page.

QVFC AND QVVFC PILOTED FLANGE CARTRIDGES – TAPERED ADAPTER EQUIVALENT *– continued*

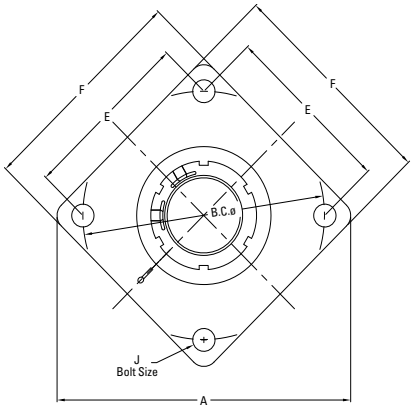

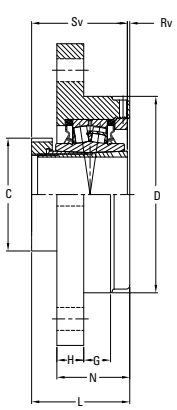

QV Single-Nut Unit[1]

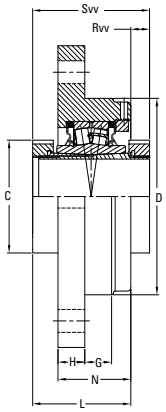

QVV Double-Nut Unit[1]

Bearing Part No.[1][2]	Shaft Dia.	Bearing No.	A	B.C.	C	D[3]	E	F	G	H	J	L	N	Rv[1]	Rvv	Sv[1]	Svv	Wt.
	mm in.		**mm** in.	**mm** in.	**mm** in.	**mm** in.	**mm** in.	**mm** in.	**mm** in.	**mm** in.	**mm** in.	**mm** in.	**mm** in.	**mm** in.	**mm** in.	**mm** in.	**mm** in.	**kg** lbs.
QVFC22V311S QVVFC22V311S	3 1⁄16 in.	22222	**367.0** 14.45	**309.9** 12.20	**139.7** 5.50	**255.0** 10.040	**219.2** 8.63	**274.3** 10.80	**44.5** 1.75	**26.4** 1.04	**20** ¾	**112.8** 4.44	**101.1** 3.98	**8.1** 0.32	**5.8** 0.23	**104.9** 4.13	**126.7** 4.99	**27.2** 60
QVFC22V312S QVVFC22V312S	3 ¾ in.																	
QVFC22V100S QVVFC22V100S	**100 mm**																	
QVFC22V315S QVVFC22V315S	3 15⁄16 in.																	
QVFC22V400S QVVFC22V400S	4 in.																	
QVFC26V110S QVVFC26V110S	**110 mm**	22226	**416.1** 16.38	**355.1** 13.98	**174.8** 6.88	**290.0** 11.417	**251.0** 9.88	**298.5** 11.75	**41.9** 1.65	**32.0** 1.26	**24** ⅞	**144.3** 5.68	**114.3** 4.50	**3.6** 0.14	**34.0** 1.34	**147.8** 5.82	**178.3** 7.02	**42.6** 94
QVFC26V407S QVVFC26V407S	4 7⁄16 in.																	
QVFC26V408S QVVFC26V408S	4 ½ in.																	
QVFC26V115S QVVFC26V115S	**115 mm**																	

[1]Bearing part numbers use QV to designate single-nut units (uses Rv and Sv dimensions) and QVV to designate double-nut units (uses Rvv and Svv dimensions).
[2]Single-nut (QV) part number shown. Double-nut (QVV) version available upon request.
[3]Pilot tolerance: +0/-0.05 mm (+0/-0.002 in.).

QVFL AND QVVFL SQUARE FLANGE BLOCKS – STRAIGHT BORE EQUIVALENT

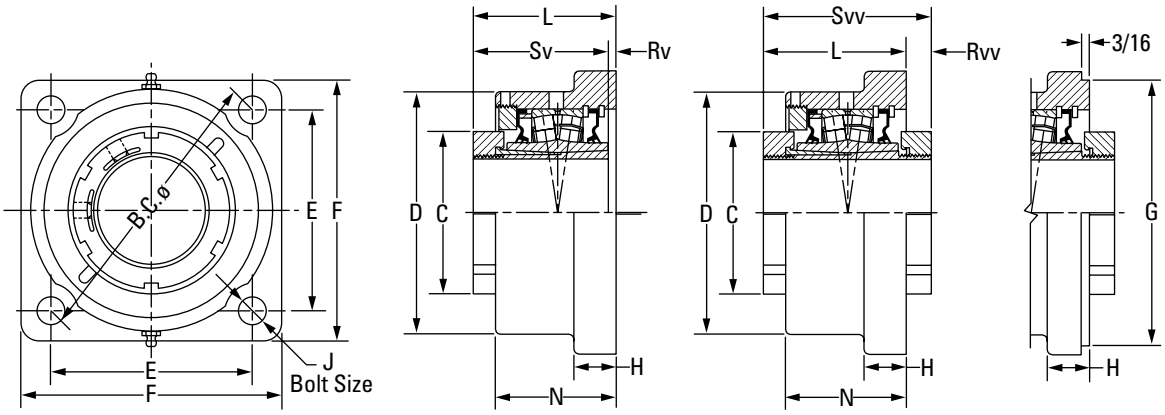

QV Single-Nut Unit[1] **QVV Double-Nut Unit[1]**

Bearing Part No.[1][2]	Shaft Dia.	Bearing No.	C	D	E	B.C.	F	G[3][4][5]	H	J	L FIX	L EXP	N	Rv[1]	Rvv	Sv[1]	Svv	Wt.
	mm in.		**mm** in.	**mm** in.	**mm** in.	**mm** in.	**mm** in.	**mm** in.	**mm** in.	**mm** in.	**mm** in.	**mm** in.	**mm** in.	**mm** in.	**mm** in.	**mm** in.	**mm** in.	**kg** lbs.
QVFL11V115S QVVFL11V115S	1 15⁄16 in.	22211	**75.9** 2.99	**115.3** 4.54	**103.4** 4.07	**146.1** 5.75	**131.8** 5.19	N/A	**23.1** 0.91	**12** ½	**82.6** 3.25	**84.6** 3.33	**61.2** 2.41	**2.5** 0.10	**19.8** 0.78	**79.8** 3.14	**102.1** 4.02	**5.0** 11
QVFL11V200S QVVFL11V200S	2 in.																	
QVFL11V050S QVVFL11V050S	**50 mm**																	
QVFL12V203S QVVFL12V203S	2 3⁄16 in.	22212	**80.3** 3.16	**130.3** 5.13	**114.6** 4.51	**162.1** 6.38	**149.4** 5.88	N/A	**19.1** 0.75	**16** ⅝	**84.3** 3.32	**86.4** 3.40	**66.8** 2.63	**4.6** 0.18	**17.8** 0.70	**79.8** 3.14	**102.1** 4.02	**6.4** 14
QVFL12V204S QVVFL12V204S	2 ¼ in.																	
QVFL12V055S QVVFL12V055S	**55 mm**																	
QVFL14V060S QVVFL14V060S	**60 mm**	22214	**94.0** 3.70	**146.1** 5.75	**121.2** 4.77	**171.5** 6.75	**157.2** 6.19	N/A	**25.4** 1.00	**16** ⅝	**86.1** 3.39	**88.1** 3.47	**72.6** 2.86	**5.1** 0.20	**15.2** 0.60	**81.0** 3.19	**101.3** 3.99	**7.7** 17
QVFL14V207S QVVFL14V207S	2 7⁄16 in.																	
QVFL14V208S QVVFL14V208S	2 ½ in.																	
QVFL14V065S QVVFL14V065S	**65 mm**																	
QVFL16V211S QVVFL16V211S	2 11⁄16 in.	22216	**106.4** 4.19	**168.4** 6.63	**141.2** 5.56	**200.2** 7.88	**182.6** 7.19	N/A	**26.9** 1.06	**20** ¾	**86.9** 3.42	**88.9** 3.50	**74.4** 2.93	**3.3** 0.13	**17.0** 0.67	**83.6** 3.29	**103.6** 4.08	**10.4** 23
QVFL16V212S QVVFL16V212S	2 ¾ in.																	
QVFL16V070S QVVFL16V070S	**70 mm**																	
QVFL16V215S QVVFL16V215S	2 15⁄16 in.																	
QVFL16V300S QVVFL16V300S	3 in.																	
QVFL16V075S QVVFL16V075S	**75 mm**																	

[1]Bearing part numbers use QV to designate single-nut units (uses Rv and Sv dimensions) and QVV to designate double-nut units (uses Rvv and Svv dimensions).

Continued on next page.

[2]Single-nut (QV) part number shown. Double-nut (QVV) version available upon request.

[3]Pilot tolerance: +0/-0.08 mm (+0/-0.003 in.).

[4]Add (p) to the end of the housing designation in the part number to order with pilot using G dimension.

[5]Piloted flange blocks will be quoted (price and delivery) upon request. For optional spigot on flange side, insert the letter P as seen in the following example: QMFP**J***S.

QVFL AND QVVFL SQUARE FLANGE BLOCKS – STRAIGHT BORE EQUIVALENT

– continued

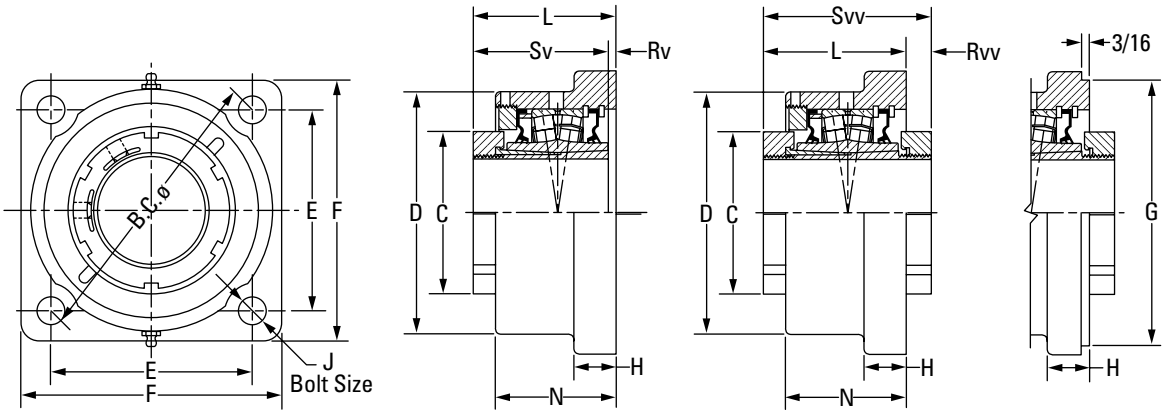

QV Single-Nut Unit[1] **QVV Double-Nut Unit[1]**

Bearing Part No.[1][2]	Shaft Dia.	Bearing No.	C	D	E	B.C.	F	G[3][4][5]	H	J	L FIX	L EXP	N	Rv[1]	Rvv	Sv[1]	Svv	Wt.
	mm in.		**mm** in.	**mm** in.	**mm** in.	**mm** in.	**mm** in.	**mm** in.	**mm** in.	**mm** in.	**mm** in.	**mm** in.	**mm** in.	**mm** in.	**mm** in.	**mm** in.	**mm** in.	**kg** lbs.
QVFL19V303S QVVFL19V303S	3 3⁄16 in.	22219	**124.5** 4.90	**193.8** 7.63	**170.7** 6.72	**241.3** 9.50	**212.9** 8.38	**187.33** 7.375	**32.5** 1.28	**20** 3⁄4	**97.3** 3.83	**99.3** 3.91	**86.4** 3.40	**3.6** 0.14	**17.0** 0.67	**93.7** 3.69	**114.0** 4.49	**15.9** 35
QVFL19V304S QVVFL19V304S	3 1⁄4 in.																	
QVFL19V080S QVVFL19V080S	**80 mm**																	
QVFL19V085S QVVFL19V085S	**85 mm**																	
QVFL19V307S QVVFL19V307S	3 7⁄16 in.																	
QVFL19V308S QVVFL19V308S	3 1⁄2 in.																	
QVFL19V090S QVVFL19V090S	**90 mm**																	
QVFL22V311S QVVFL22V311S	3 11⁄16 in.	22222	**139.7** 5.50	**229.6** 9.04	**193.0** 7.60	**273.1** 10.75	**241.3** 9.50	**215.90** 8.500	**38.1** 1.50	**24** 1	**116.8** 4.60	**118.9** 4.68	**104.6** 4.12	**11.9** 0.47	**9.9** 0.39	**104.9** 4.13	**126.7** 4.99	**24.9** 55
QVFL22V312S QVVFL22V312S	3 3⁄4 in.																	
QVFL22V100S QVVFL22V100S	**100 mm**																	
QVFL22V315S QVVFL22V315S	3 15⁄16 in.																	
QVFL22V400S QVVFL22V400S	4 in.																	

[1]Bearing part numbers use QV to designate single-nut units (uses Rv and Sv dimensions) and QVV to designate double-nut units (uses Rvv and Svv dimensions).
[2]Single-nut (QV) part number shown. Double-nut (QVV) version available upon request.
[3]Pilot tolerance: +0/-0.08 mm (+0/-0.003 in.).
[4]Add (p) to the end of the housing designation in the part number to order with pilot using G dimension.
[5]Piloted flange blocks will be quoted (price and delivery) upon request. For optional spigot on flange side, insert the letter P as seen in the following example: QMFP**J***S.

QVFX AND QVVFX 5000 SERIES SQUARE FLANGE BLOCKS – STRAIGHT BORE EQUIVALENT

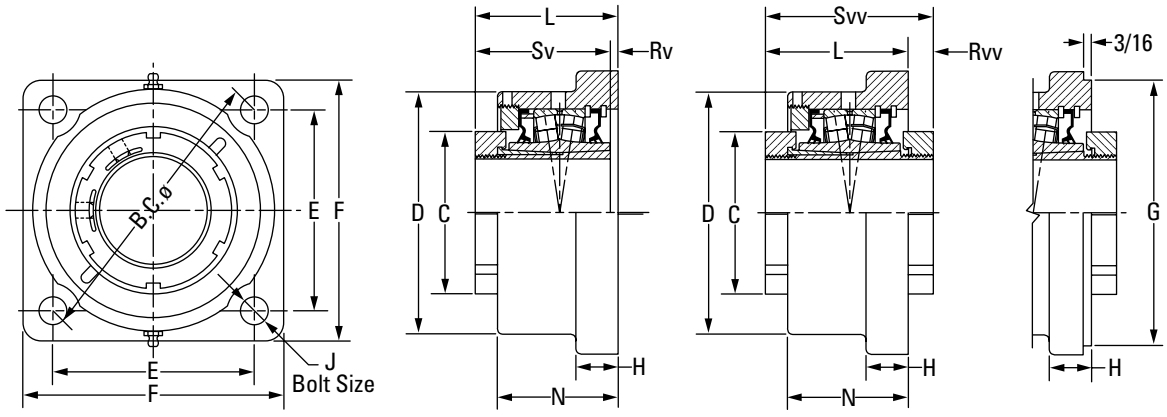

QV Single-Nut Unit[1] **QVV Double-Nut Unit[1]**

Bearing Part No.[1][2]	Shaft Dia.	Bearing No.	C	D	E	B.C.	F	G[3][4][5]	H	J	L FIX	L EXP	N	Rv[1]	Rvv	Sv[1]	Svv	Wt.
	mm in.		**mm** in.	**mm** in.	**mm** in.	**mm** in.	**mm** in.	**mm** in.	**mm** in.	**mm** in.	**mm** in.	**mm** in.	**mm** in.	**mm** in.	**mm** in.	**mm** in.	**mm** in.	**kg** lbs.
QVFX11V115S QVVFX11V115S	1 15⁄16 in.	22211	**75.9** 2.99	**120.7** 4.75	**103.6** 4.08	**146.1** 5.75	**134.9** 5.31	**111.13** 4.375	**22.4** 0.88	**12** 1⁄2	**84.1** 3.31	**86.1** 3.39	**65.0** 2.56	**4.1** 0.16	**18.3** 0.72	**79.8** 3.14	**102.1** 4.02	**5.0** 11
QVFX11V200S QVVFX11V200S	2 in.																	
QVFX11V050S QVVFX11V050S	**50 mm**																	
QVFX12V203S QVVFX12V203S	2 3⁄16 in.	22212	**80.3** 3.16	**130.3** 5.13	**114.3** 4.50	**161.5** 6.36	**149.4** 5.88	**127.00** 5.000	**25.4** 1.00	**16** 5⁄8	**84.3** 3.32	**86.4** 3.40	**66.8** 2.63	**4.6** 0.18	**17.5** 0.69	**79.8** 3.14	**102.1** 4.02	**6.4** 14
QVFX12V204S QVVFX12V204S	2 1⁄4 in.																	
QVFX12V055S QVVFX12V055S	**55 mm**																	
QVFX14V060S QVVFX14V060S	**60 mm**	22214	**94.0** 3.70	**146.1** 5.75	**127.8** 5.03	**180.8** 7.12	**157.2** 6.19	**138.13** 5.438	**25.4** 1.00	**16** 5⁄8	**85.1** 3.35	**87.4** 3.44	**72.4** 2.85	**4.1** 0.16	**16.0** 0.63	**81.0** 3.19	**101.3** 3.99	**7.7** 17
QVFX14V207S QVVFX14V207S	2 7⁄16 in.																	
QVFX14V208S QVVFX14V208S	2 1⁄2 in.																	
QVFX14V065S QVVFX14V065S	**65 mm**																	
QVFX16V211S QVVFX16V211S	2 11⁄16 in.	22216	**106.4** 4.19	**168.9** 6.65	**152.7** 6.01	**215.9** 8.50	**189.0** 7.44	**160.35** 6.313	**26.9** 1.06	**20** 3⁄4	**87.6** 3.45	**89.7** 3.53	**76.2** 3.00	**4.1** 0.16	**16.3** 0.64	**83.6** 3.29	**103.6** 4.08	**10.4** 23
QVFX16V212S QVVFX16V212S	2 3⁄4 in.																	
QVFX16V070S QVVFX16V070S	**70 mm**																	
QVFX16V215S QVVFX16V215S	2 15⁄16 in.																	
QVFX16V300S QVVFX16V300S	3 in.																	
QVFX16V075S QVVFX16V075S	**75 mm**																	

[1]Bearing part numbers use QV to designate single-nut units (uses Rv and Sv dimensions) and QVV to designate double-nut units (uses Rvv and Svv dimensions).
[2]Single-nut (QV) part number shown. Double-nut (QVV) version available upon request.
[3]Pilot tolerance: +0/-0.05 mm (+0/-0.002 in.).
[4]Add (p) to the end of the housing designation in the part number to order with pilot using G dimension.
[5]Piloted flange blocks will be quoted (price and delivery) upon request. For optional spigot on flange side, insert the letter P as seen in the following example: QMFP**J***S.
[6]Six-bolt round housing.

Continued on next page.

QVFX AND QVVFX 5000 SERIES SQUARE FLANGE BLOCKS – STRAIGHT BORE EQUIVALENT *– continued*

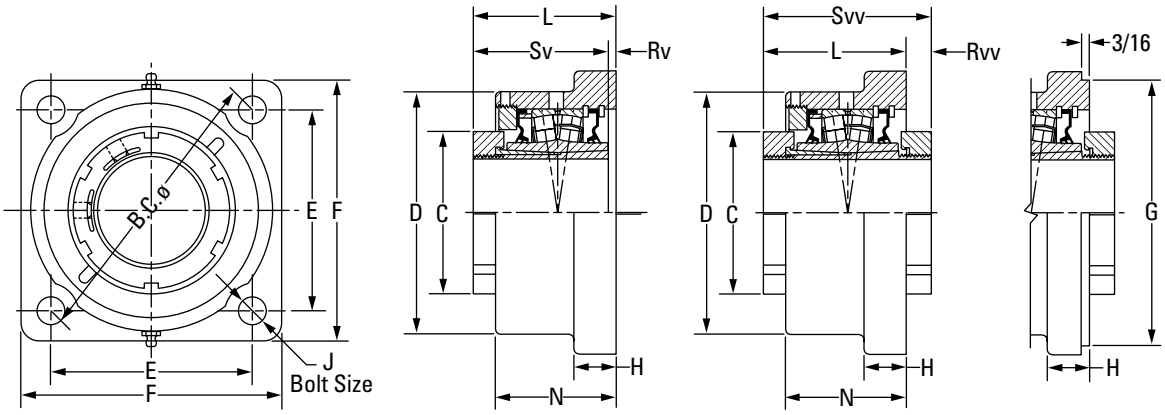

QV Single-Nut Unit[1] **QVV Double-Nut Unit[1]**

Bearing Part No.[1][2]	Shaft Dia.	Bearing No.	C	D	E	B.C.	F	G[3][4][5]	H	J	L FIX	L EXP	N	Rv[1]	Rvv	Sv[1]	Svv	Wt.
	mm in.		**mm** in.	**mm** in.	**mm** in.	**mm** in.	**mm** in.	**mm** in.	**mm** in.	**mm** in.	**mm** in.	**mm** in.	**mm** in.	**mm** in.	**mm** in.	**mm** in.	**mm** in.	**kg** lbs.
QVFX19V303S QVVFX19V303S	3 3⁄16 in.	22219	**124.5** 4.90	**193.8** 7.63	**170.7** 6.72	**241.3** 9.50	**212.6** 8.37	**187.33** 7.375	**33.3** 1.31	**20** 3⁄4	**98.3** 3.87	**100.6** 3.96	**84.1** 3.31	**4.8** 0.19	**15.7** 0.62	**93.7** 3.69	**114.0** 4.49	**15.9** 35
QVFX19V304S QVVFX19V304S	3 1⁄4 in.																	
QVFX19V080S QVVFX19V080S	**80 mm**																	
QVFX19V085S QVVFX19V085S	**85 mm**																	
QVFX19V307S QVVFX19V307S	3 7⁄16 in.																	
QVFX19V308S QVVFX19V308S	3 1⁄2 in.																	
QVFX19V090S QVVFX19V090S	**90 mm**																	
QVFX22V311S QVVFX22V311S	3 11⁄16 in.	22222	**139.7** 5.50	**235.0** 9.25	**211.1** 8.31	**298.5** 11.75	**268.2** 10.56	**225.43** 8.875	**38.1** 1.50	**24** 1	**114.0** 4.49	**116.3** 4.58	**100.6** 3.96	**9.4** 0.37	**12.7** 0.50	**104.9** 4.13	**126.7** 4.99	**24.9** 55
QVFX22V312S QVVFX22V312S	3 3⁄4 in.																	
QVFX22V100S QVVFX22V100S	**100 mm**																	
QVFX22V315S QVVFX22V315S	3 15⁄16 in.																	
QVFX22V400S QVVFX22V400S	4 in.																	
QVFX26V110S[6] QVVFX26V110S[6]	**110 mm**	22226	**174.8** 6.88	**254.0** 10.00	**163.6** 6.44[6]	**327.2** 12.88[6]	**384.3** 15.13	**263.53** 10.375	**38.1** 1.50	**24** 1[6]	**140.5** 5.53	**142.7** 5.62	**106.9** 4.21	**7.4** 0.29	**37.8** 1.49	**147.8** 5.82	**178.3** 7.02	**49.0** 108
QVFX26V407S[6] QVVFX26V407S[6]	4 7⁄16 in.																	
QVFX26V408S[6] QVVFX26V408S[6]	4 1⁄2 in.																	
QVFX26V115S[6] QVVFX26V115S[6]	**115 mm**																	
QVFX28V125S[6] QVVFX28V125S[6]	**125 mm**	22228	**190.0** 7.48	**284.2** 11.19	**177.8** 7.00[6]	**355.6** 14.00[6]	**419.1** 16.50	**284.18** 11.188	**38.1** 1.50	**24** 1 1⁄8[6]	**166.1** 6.54	**168.1** 6.62	**138.4** 5.45	**18.3** 0.72	**12.2** 0.48	**147.8** 5.82	**178.3** 7.02	**52.2** 115
QVFX28V415S[6] QVVFX28V415S[6]	4 15⁄16 in.																	
QVFX28V500S[6] QVVFX28V500S[6]	5 in.																	
QVFX28V130S[6] QVVFX28V130S[6]	**130 mm**																	

[1] Bearing part numbers use QV to designate single-nut units (uses Rv and Sv dimensions) and QVV to designate double-nut units (uses Rvv and Svv dimensions).
[2] Single-nut (QV) part number shown. Double-nut (QVV) version available upon request.
[3] Pilot tolerance: +0/-0.05 mm (+0/-0.002 in.).
[4] Add (p) to the end of the housing designation in the part number to order with pilot using G dimension.
[5] Piloted flange blocks will be quoted (price and delivery) upon request. For optional spigot on flange side, insert the letter P as seen in the following example: QMFP**.J***S.
[6] Six-bolt round housing.

QVFK AND QVVFK 9000 SERIES SQUARE FLANGE BLOCKS – TAPERED BORE EQUIVALENT

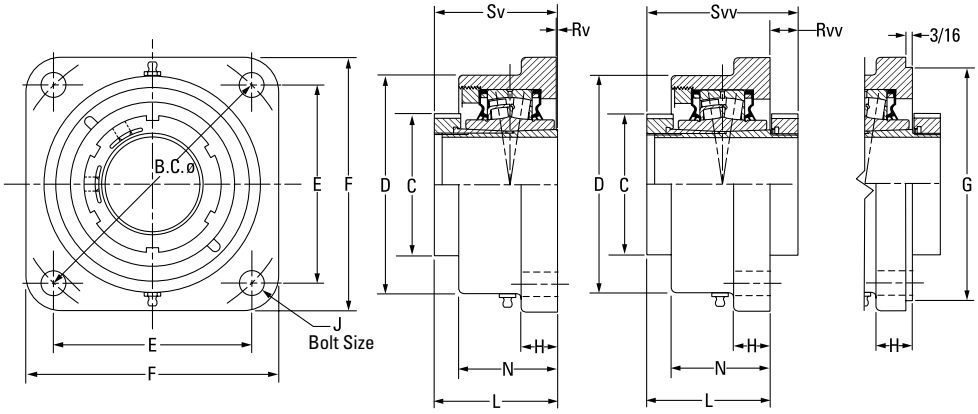

QV Single-Nut Unit[1] **QVV Double-Nut Unit[1]**

Bearing Part No.[1][2]	Shaft Dia.	Bearing No.	C	D	E	B.C.	F	G[3][4][5]	H	J	L FIX	L EXP	N	Rv[1]	Rvv	Sv[1]	Svv	Wt.
	mm in.		**mm** in.	**mm** in.	**mm** in.	**mm** in.	**mm** in.	**mm** in.	**mm** in.	**mm** in.	**mm** in.	**mm** in.	**mm** in.	**mm** in.	**mm** in.	**mm** in.	**mm** in.	**kg** lbs.
QVFK11V115S QVVFK11V115S	1 15/16 in.	22211	**75.9** 2.99	**130.3** 5.13	**114.3** 4.50	**161.5** 6.36	**149.4** 5.88	**127.00** 5.000	**19.1** 0.75	**16** 5/8	**87.1** 3.43	**88.4** 3.48	**66.8** 2.63	**7.4** 0.29	**15.0** 0.59	**79.8** 3.14	**102.1** 4.02	**5.0** 11
QVFK11V200S QVVFK11V200S	2 in.																	
QVFK11V050S QVVFK11V050S	**50 mm**																	
QVFK13V203S QVVFK13V203S	2 3/16 in.	22213	**80.3** 3.16	**146.1** 5.75	**127.8** 5.03	**180.8** 7.12	**157.2** 6.19	**138.13** 5.438	**25.4** 1.00	**16** 5/8	**92.2** 3.63	**94.2** 3.71	**72.4** 2.85	**6.9** 0.27	**15.5** 0.61	**85.3** 3.36	**107.7** 4.24	**6.4** 14
QVFK13V204S QVVFK13V204S	2 1/4 in.																	
QVFK13V055S QVVFK13V055S	**55 mm**																	
QVFK15V060S QVVFK15V060S	**60 mm**	22215	**94.0** 3.70	**168.9** 6.65	**152.7** 6.01	**215.9** 8.50	**189.0** 7.44	**160.35** 6.313	**26.9** 1.06	**20** 3/4	**92.5** 3.64	**94.5** 3.72	**76.2** 3.00	**9.9** 0.39	**11.4** 0.45	**82.6** 3.25	**103.9** 4.09	**7.7** 17
QVFK15V207S QVVFK15V207S	2 7/16 in.																	
QVFK15V208S QVVFK15V208S	2 1/2 in.																	
QVFK15V065S QVVFK15V065S	**65 mm**																	
QVFK17V211S QVVFK17V211S	2 11/16 in.	22217	**106.4** 4.19	**193.8** 7.63	**170.7** 6.72	**241.3** 9.50	**212.9** 8.38	**187.33** 7.375	**33.3** 1.31	**20** 3/4	**92.5** 3.64	**101.1** 3.98	**84.1** 3.31	**14.5** 0.57	**7.1** 0.28	**84.6** 3.33	**106.2** 4.18	**10.4** 23
QVFK17V212S QVVFK17V212S	2 3/4 in.																	
QVFK17V070S QVVFK17V070S	**70 mm**																	
QVFK17V215S QVVFK17V215S	2 15/16 in.																	
QVFK17V300S QVVFK17V300S	3 in.																	
QVFK17V075S QVVFK17V075S	**75 mm**																	

[1]Bearing part numbers use QV to designate single-nut units (uses Rv and Sv dimensions) and QVV to designate double-nut units (uses Rvv and Svv dimensions).
[2]Single-nut (QV) part number shown. Double-nut (QVV) version available upon request.
[3]Pilot tolerance: +0/-0.05 mm (+0/-0.002 in.).
[4]Add (p) to the end of the housing designation in the part number to order with pilot using G dimension.
[5]Piloted flange blocks will be quoted (price and delivery) upon request. For optional spigot on flange side, insert the letter P as seen in the following example: QMFP**J***S.
[6]Six-bolt round housing.

Continued on next page.

QVFK AND QVVFK 9000 SERIES SQUARE FLANGE BLOCKS – TAPERED BORE EQUIVALENT *– continued*

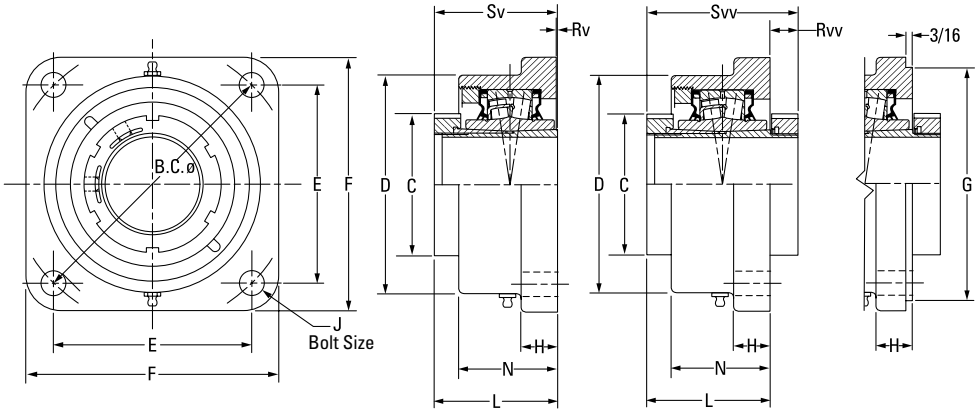

QV Single-Nut Unit[1] **QVV Double-Nut Unit[1]**

Bearing Part No.[1][2]	Shaft Dia.	Bearing No.	C	D	E	B.C.	F	G[3][4][5]	H	J	L FIX	L EXP	N	Rv[1]	Rvv	Sv[1]	Svv	Wt.
	mm in.		**mm** in.	**mm** in.	**mm** in.	**mm** in.	**mm** in.	**mm** in.	**mm** in.	**mm** in.	**mm** in.	**mm** in.	**mm** in.	**mm** in.	**mm** in.	**mm** in.	**mm** in.	**kg** lbs.
QVFK20V303S QVVFK20V303S	3 3⁄16 in.	22220	**124.5** 4.90	**215.9** 8.50	**211.1** 8.31	**298.5** 11.75	**268.2** 10.56	**225.43** 8.875	**38.1** 1.50	**24** 7⁄8	**113.3** 4.46	**115.3** 4.54	**103.1** 4.06	**18.0** 0.71	**4.1** 0.16	**95.3** 3.75	**117.3** 4.62	**15.9** 35
QVFK20V304S QVVFK20V304S	3 1⁄4 in.																	
QVFK20V080S QVVFK20V080S	**80 mm**																	
QVFK20V085S QVVFK20V085S	**85 mm**																	
QVFK20V307S QVVFK20V307S	3 7⁄16 in.																	
QVFK20V308S QVVFK20V308S	3 1⁄2 in.																	
QVFK20V090S QVVFK20V090S	**90 mm**																	
QVFK22V311S[6] QVVFK22V311S[6]	3 11⁄16 in.	22222	**139.7** 5.50	**254.0** 10.00	**163.6** 6.44[6]	**327.2** 12.88[6]	**384.3** 15.13	**263.53** 10.375	**31.8** 1.25	**24** 1[6]	**117.3** 4.62	**119.4** 4.70	**106.9** 4.21	**12.4** 0.49	**9.7** 0.38	**104.9** 4.13	**126.7** 4.99	**24.9** 55
QVFK22V312S[6] QVVFK22V312S[6]	3 3⁄4 in.																	
QVFK22V100S[6] QVVFK22V100S[6]	**100 mm**																	
QVFK22V315S[6] QVVFK22V315S[6]	3 15⁄16 in.																	
QVFK22V400S[6] QVVFK22V400S[6]	4 in.																	
QVFK26V110S[6] QVVFK26V110S[6]	**110 mm**	22226	**174.8** 6.88	**284.2** 11.19	**177.8** 7.00[6]	**355.6** 14.00[6]	**419.1** 16.50	**284.18** 11.188	**38.1** 1.50	**24** 1[6]	**164.6** 6.48	**166.6** 6.56	**135.1** 5.32	**11.7** 0.46	**13.7** 0.54	**147.8** 5.82	**178.3** 7.02	**49.0** 108
QVFK26V407S[6] QVVFK26V407S[6]	4 7⁄16 in.																	
QVFK26V408S[6] QVVFK26V408S[6]	4 1⁄2 in.																	
QVFK26V115S[6] QVVFK26V115S[6]	**115 mm**																	

[1]Bearing part numbers use QV to designate single-nut units (uses Rv and Sv dimensions) and QVV to designate double-nut units (uses Rvv and Svv dimensions).
[2]Single-nut (QV) part number shown. Double-nut (QVV) version available upon request.
[3]Pilot tolerance: +0/-0.05 mm (+0/-0.002 in.).
[4]Add (p) to the end of the housing designation in the part number to order with pilot using G dimension.
[5]Piloted flange blocks will be quoted (price and delivery) upon request. For optional spigot on flange side, insert the letter P as seen in the following example: QMFP**J***S.
[6]Six-bolt round housing.

QVFNL SERIES FLANGE BLOCKS – TAPERED BORE EQUIVALENT

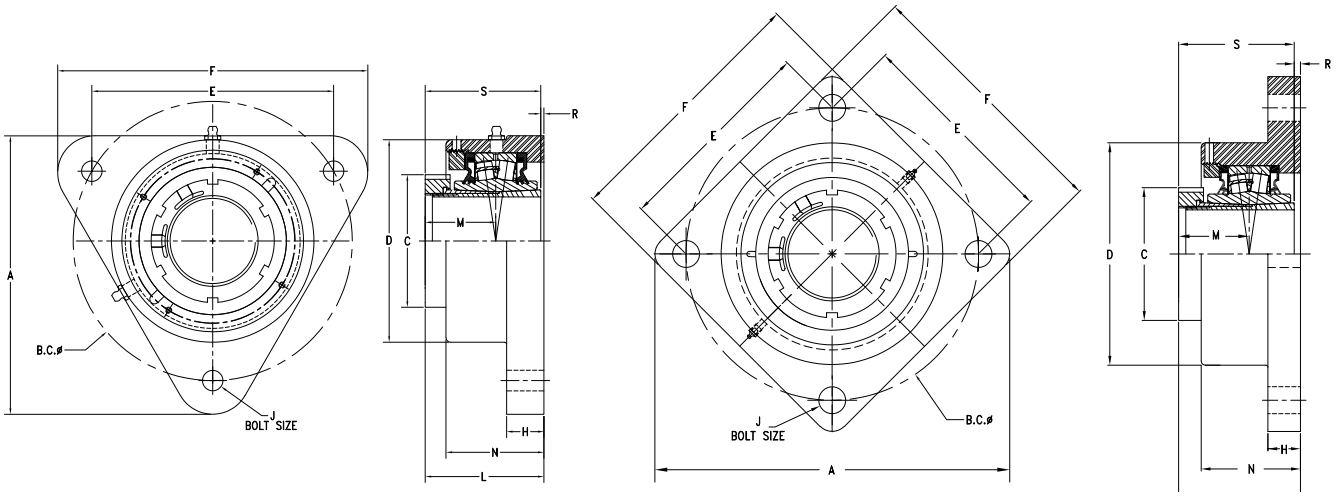

Bearing Part No.[1][2]	Shaft Dia.	Bearing No.	A	B.C	C	D	E	F	H	J	L	M	N	R	S	Wt.
	mm in.		**mm** in.	**mm** in.	**mm** in.	**mm** in.	**mm** in.	**mm** in.	**mm** in.	**mm** in.	**mm** in.	**mm** in.	**mm** in.	**mm** in.	**mm** in.	**kg** lbs.
QVFNL11V050S[3] QVFNL11V115S[3] QVFNL11V200S[3]	**50 mm** 1 15⁄16 in. 2 in.	22211	**172.3** 6.78	**170.0** 6.69	**76.0** 2.99	**121.9** 4.80	**147.2** 5.80	**192.0** 7.56	**15** 0.59	**12** 1⁄2	**80.8** 3.18	**51.10** 2.01	**60.0** 2.63	**0.4** 0.01	**80.5** 3.17	**5.0** 11
QVFNL12V055S[3]	**55 mm**	22212	**173.2** 6.82	**180.0** 7.09	**80.3** 3.16	**127.0** 5.00	**155.9** 6.14	**210.0** 8.27	**15** .059	**12** 1⁄2	**81.5** 3.21	**51.00** 2.01	**59.0** 2.32	**0.5** 0.02	**81.0** 3.19	**5.4** 11.9
QVFNL13V203S[3] QVFNL13V204S[3] QVFNL13V060S[3]	2 3⁄16 in. 2 1⁄4 in. **60 mm**	22213	**200.2** 7.88	**190.0** 7.48	**80.3** 3.16	**137.8** 5.43	**164.5** 6.48	**223.3** 8.79	**15** .059	**12** 1⁄2	**84.1** 3.31	**51.90** 2.04	**66.6** 2.62	**3.3** 0.13	**80.8** 3.18	**6.3** 13.9
QVFNL15V065S QVFNL15V207S QVFNL15V208S	**65 mm** 2 7⁄16 in. 2 1⁄2 in.	22215	**258.2** 10.16	**215.0** 8.46	**94.0** 3.70	**169.9** 6.69	**152.0** 5.98	**190.0** 7.48	**25** 0.98	**16** 5⁄8	**83.3** 3.28	**50.55** 1.99	**65.4** 2.58	**0.4** 0.01	**83.1** 3.27	**11.3** 25.0
QVFNL16V070S QVFNL16V211S QVFNL16V212S	**70 mm** 2 11⁄16 in. 2 3⁄4 in.	22216	**258.2** 10.16	**215.0** 8.46	**106.4** 4.19	**170.0** 6.69	**152.0** 5.98	**190.0** 7.48	**25** 0.98	**16** 5⁄8	**83.8** 3.30	**51.90** 2.04	**65.4** 2.58	**0.4** 0.01	**83.6** 3.29	**13.6** 30.0
QVFNL17V075S QVFNL17V215S QVFNL17V300S	**75 mm** 2 15⁄16 in. 3 in.	22217	**279.4** 11.00	**240.4** 9.47	**106.4** 4.19	**190.0** 7.48	**170.0** 6.69	**210.0** 8.27	**25** 0.98	**16** 5⁄8	**89.9** 3.54	**52.90** 2.08	**73.1** 2.88	**5.2** 0.21	**84.6** 3.33	**13.6** 30.0
QVFNL19V080S QVFNL19V303S QVFNL19V304S	**80 mm** 3 3⁄16 in. 3 1⁄4 in.	22219	**279.4** 11.00	**240.4** 9.47	**124.5** 4.90	**190.0** 7.48	**170.0** 6.69	**210.0** 8.27	**25** 0.98	**16** 5⁄8	**98.8** 3.89	**57.20** 2.25	**73.1** 2.88	**5.1** 0.20	**93.7** 3.69	**13.6** 30.0
QVFNL20V090S QVFNL20V307S QVFNL20V308S	**90 mm** 3 7⁄16 in. 3 1⁄2 in.	22220	**332.5** 13.09	**279.9** 11.02	**124.5** 4.90	**198.1** 7.80	**197.9** 7.79	**250.0** 9.84	**30** 1.18	**20** 3⁄4	**102.1** 4.02	**58.70** 2.31	**90.8** 3.58	**7.1** 0.28	**95.0** 3.74	**18.1** 40.0
QVFNL22V100S QVFNL22V311S QVFNL22V312S QVFNL22V315S QVFNL22V400S	**100 mm** 3 11⁄16 in. 3 3⁄4 in. 3 15⁄16 in. 4 in.	22222	**360.8** 14.21	**309.9** 12.2	**139.7** 5.50	**218.4** 8.60	**219.1** 8.63	**270.0** 10.63	**30** 1.18	**20** 3⁄4	**113.0** 4.45	**63.40** 2.50	**99.6** 3.92	**8.2** 0.32	**104.9** 4.13	**27.2** 60.0

[1]Bearing part numbers use QV to designate single-nut units (uses Rv and Sv dimensions) and QVV to designate double-nut units (uses Rvv and Svv dimensions).
[2]Single-nut (QV) part number shown. Double-nut (QVV) version available upon request.
[3]Three-bolt triangle housing.

QVFY AND QVVFY ROUND FLANGE BLOCKS – STRAIGHT BORE EQUIVALENT

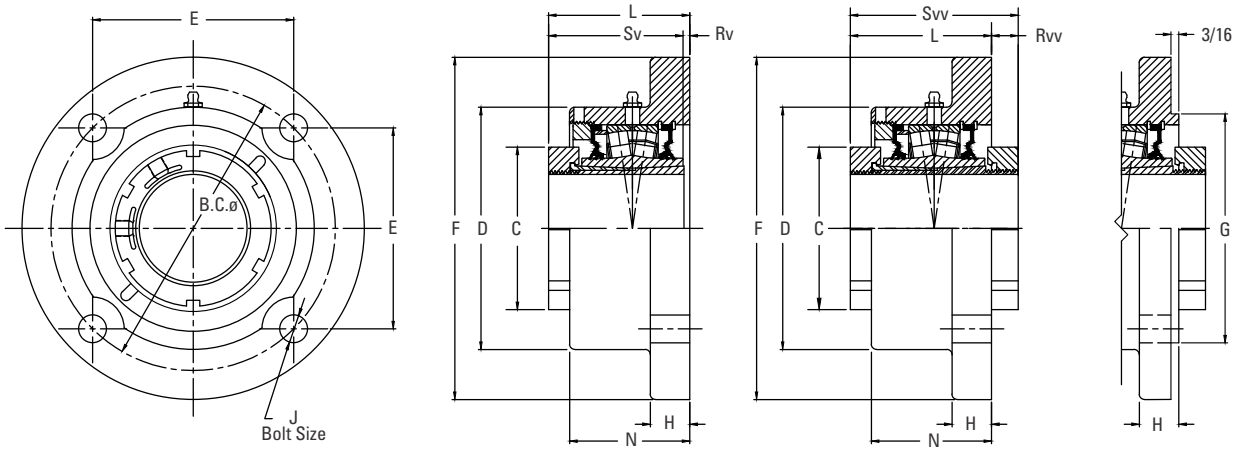

Bearing Part No.[1][2]	Shaft Dia.	Bearing No.	C	D	E	B.C.	F	G[3][4][5]	H	J	L FIX	L EXP	N	Rv[1]	Rvv	Sv[1]	Svv	Wt.
	mm in.		**mm** in.	**mm** in.	**mm** in.	**mm** in.	**mm** in.	**mm** in.	**mm** in.	**mm** in.	**mm** in.	**mm** in.	**mm** in.	**mm** in.	**mm** in.	**mm** in.	**mm** in.	**kg** lbs.
QVFY11V115S QVVFY11V115S	1 15⁄16 in.	22211	**75.9** 2.99	**115.3** 4.54	**103.4** 4.07	**146.1** 5.75	**177.8** 7.00	**111.13** 4.375	**19.1** 0.75	**12** 1⁄2	**78.5** 3.09	**80.5** 3.17	**58.4** 2.30	**1.5** 0.06	**23.9** 0.94	**79.8** 3.14	**102.1** 4.02	**5.4** 12
QVFY11V200S QVVFY11V200S	2 in.																	
QVFY11V050S QVVFY11V050S	**50 mm**																	
QVFY12V203S QVVFY12V203S	2 3⁄16 in.	22212	**80.3** 3.16	**130.3** 5.13	**114.6** 4.51	**162.1** 6.38	**196.9** 7.75	**127.00** 5.000	**19.1** 0.75	**16** 5⁄8	**80.0** 3.15	**82.0** 3.23	**62.0** 2.44	**0.3** 0.01	**22.1** 0.87	**79.8** 3.14	**102.1** 4.02	**6.8** 15
QVFY12V204S QVVFY12V204S	2 1⁄4 in.																	
QVFY12V055S QVVFY12V055S	**55 mm**																	
QVFY14V060S QVVFY14V060S	**60 mm**	22214	**94.0** 3.70	**146.1** 5.75	**121.2** 4.77	**171.5** 6.75	**206.5** 8.13	**138.13** 5.438	**23.9** 0.94	**16** 5⁄8	**84.8** 3.34	**86.9** 3.42	**72.4** 2.85	**3.8** 0.15	**16.5** 0.65	**81.0** 3.19	**101.3** 3.99	**8.6** 19
QVFY14V207S QVVFY14V207S	2 7⁄16 in.																	
QVFY14V208S QVVFY14V208S	2 1⁄2 in.																	
QVFY14V065S QVVFY14V065S	**65 mm**																	
QVFY16V211S QVVFY16V211S	2 11⁄16 in.	22216	**106.4** 4.19	**168.4** 6.63	**141.5** 5.57	**199.9** 7.87	**241.3** 9.50	**160.35** 6.313	**23.9** 0.94	**20** 3⁄4	**88.4** 3.48	**90.4** 3.56	**76.2** 3.00	**4.8** 0.19	**15.2** 0.60	**83.6** 3.29	**103.6** 4.08	**12.7** 28
QVFY16V212S QVVFY16V212S	2 3⁄4 in.																	
QVFY16V070S QVVFY16V070S	**70 mm**																	
QVFY16V215S QVVFY16V215S	2 15⁄16 in.																	
QVFY16V300S QVVFY16V300S	3 in.																	
QVFY16V075S QVVFY16V075S	**75 mm**																	

[1] Bearing part numbers use QV to designate single-nut units (uses Rv and Sv dimensions) and QVV to designate double-nut units (uses Rvv and Svv dimensions).
[2] Single-nut (QV) part number shown. Double-nut (QVV) version available upon request.
[3] Pilot tolerance: +0/-0.05 mm (+0/-0.002 in.).
[4] Add (p) to the end of the housing designation in the part number to order with pilot using G dimension.
[5] Piloted flange blocks will be quoted (price and delivery) upon request. For optional spigot on flange side, insert the letter P as seen in the following example: QMFP**J***S.
[6] Six-bolt round housing.

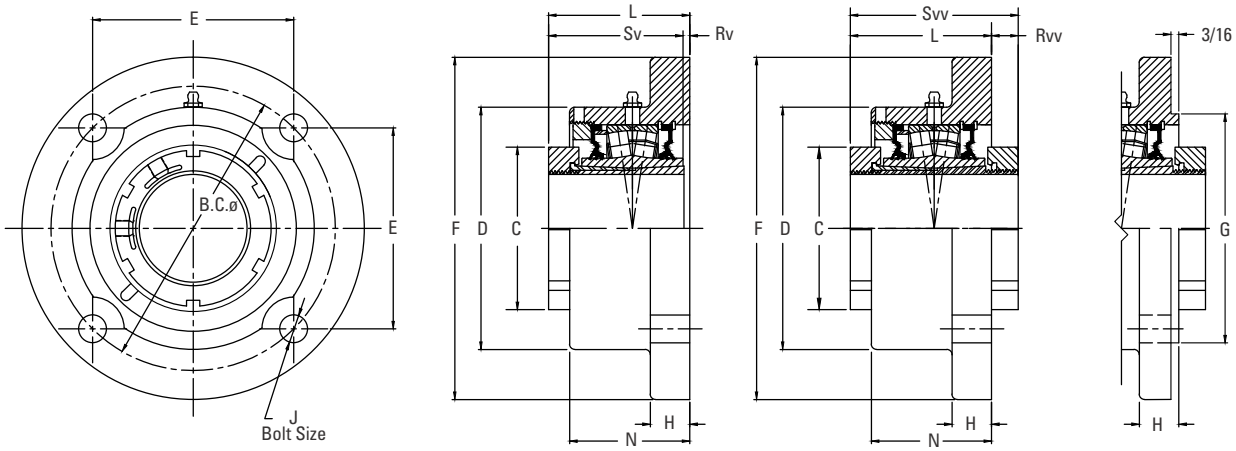

Bearing Part No.[1][2]	Shaft Dia.	Bearing No.	C	D	E	B.C.	F	G[3][4][5]	H	J	L FIX	L EXP	N	Rv[1]	Rvv	Sv[1]	Svv	Wt.
	mm in.		**mm** in.	**mm** in.	**mm** in.	**mm** in.	**mm** in.	**mm** in.	**mm** in.	**mm** in.	**mm** in.	**mm** in.	**mm** in.	**mm** in.	**mm** in.	**mm** in.	**mm** in.	**kg** lbs.
QVFY19V303S QVVFY19V303S	3 3⁄16 in.	22219	**124.5** 4.90	**193.8** 7.63	**170.7** 6.72	**241.3** 9.50	**282.7** 11.13	**187.33** 7.375	**28.7** 1.13	**24** 7⁄8	**98.3** 3.87	**116.1** 4.57	**85.3** 3.36	**4.8** 0.19	**15.7** 0.62	**93.7** 3.69	**114.0** 4.49	**19.1** 42
QVFY19V304S QVVFY19V304S	3 1⁄4 in.																	
QVFY19V080S QVVFY19V080S	**80 mm**																	
QVFY19V085S QVVFY19V085S	**85 mm**																	
QVFY19V307S QVVFY19V307S	3 7⁄16 in.																	
QVFY19V308S QVVFY19V308S	3 1⁄2 in.																	
QVFY19V090S QVVFY19V090S	**90 mm**																	
QVFY22V311S QVVFY22V311S	3 11⁄16 in.	22222	**139.7** 5.50	**222.5** 8.76	**193.0** 7.60	**273.1** 10.75	**320.8** 12.63	N/A	**28.7** 1.13	**24** 1	**115.3** 4.54	**117.3** 4.62	**103.1** 4.06	**10.4** 0.41	**11.4** 0.45	**104.9** 4.13	**126.7** 4.99	**29.9** 66
QVFY22V312S QVVFY22V312S	3 3⁄4 in.																	
QVFY22V100S QVVFY22V100S	**100 mm**																	
QVFY22V315S QVVFY22V315S	3 15⁄16 in.																	
QVFY22V400S QVVFY22V400S	4 in.																	
QVFY26V110S[6] QVVFY26V110S[6]	**110 mm**	22226	**174.8** 6.88	**230.1** 9.06	**163.6** 6.44[6]	**327.2** 12.88[6]	**384.3** 15.13	N/A	**38.1** 1.50	**24** 1[6]	**140.5** 5.53	**142.7** 5.62	**106.9** 4.21	**7.4** 0.29	**37.8** 1.49	**147.8** 5.82	**178.3** 7.02	**49.0** 108
QVFY26V407S[6] QVVFY26V407S[6]	4 7⁄16 in.																	
QVFY26V408S[6] QVVFY26V408S[6]	4 1⁄2 in.																	
QVFY26V115S[6] QVVFY26V115S[6]	**115 mm**																	
QVFY28V125S[6] QVVFY28V125S[6]	**125 mm**	22228	**190.0** 7.48	**284.2** 11.19	**177.8** 7.00[6]	**355.6** 14.00[6]	**419.1** 16.50	N/A	**38.1** 1.50	**24** 1 1⁄8[6]	**166.1** 6.54	**168.1** 6.62	**138.4** 5.45	**18.3** 0.72	**12.2** 0.48	**147.8** 5.82	**178.3** 7.02	**52.2** 115
QVFY28V415S[6] QVVFY28V415S[6]	4 15⁄16 in.																	
QVFY28V500S[6] QVVFY28V500S[6]	5 in.																	
QVFY28V130S[6] QVVFY28V130S[6]	**130 mm**																	

[1]Bearing part numbers use QV to designate single-nut units (uses Rv and Sv dimensions) and QVV to designate double-nut units (uses Rvv and Svv dimensions).
[2]Single-nut (QV) part number shown. Double-nut (QVV) version available upon request.
[3]Pilot tolerance: +0/-0.05 mm (+0/-0.002 in.).
[4]Add (p) to the end of the housing designation in the part number to order with pilot using G dimension.
[5]Piloted flange blocks will be quoted (price and delivery) upon request. For optional spigot on flange side, insert the letter P as seen in the following example: QMFP**J***S.
[6]Six-bolt round housing.

QVC AND QVVC PILOTED FLANGE CARTRIDGES – STRAIGHT BORE EQUIVALENT

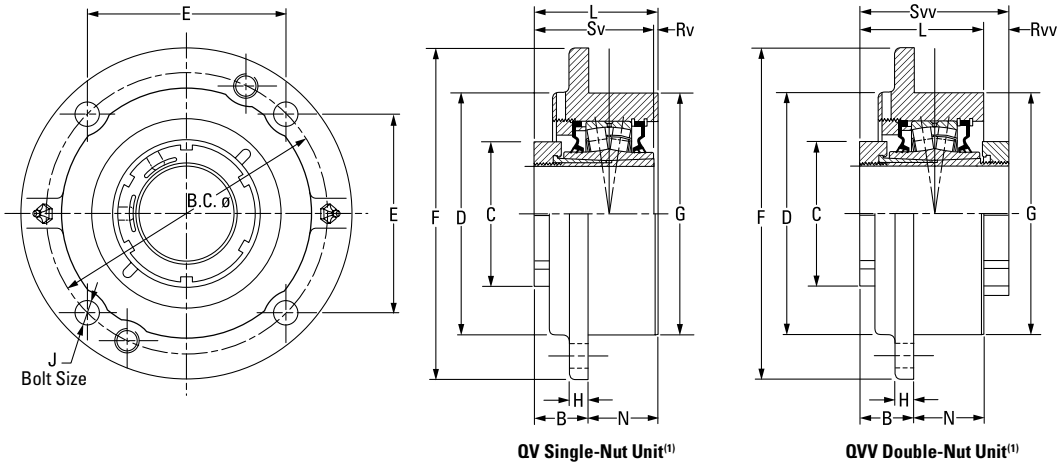

QV Single-Nut Unit[1] **QVV Double-Nut Unit[1]**

Bearing Part No.[1][2]	Shaft Dia.	Bearing No.	B FIX	B EXP	C	D	B.C.	E	F	G[3]	H	J	L	N	Rv[1]	Rvv	Sv[1]	Svv	Wt.
	mm in.		**mm** in.	**mm** in.	**mm** in.	**mm** in.	**mm** in.	**mm** in.	**mm** in.	**mm** in.	**mm** in.	**mm** in.	**mm** in.	**mm** in.	**mm** in.	**mm** in.	**mm** in.	**mm** in.	**kg** lbs.
QVC11V115S QVVC11V115S	1 15⁄16 in.	22211	**53.8**	**55.9**	**75.9**	**113.5**	**136.7**	**96.5**	**162.1**	**114.3**	**16.0**	**10**	**80.8**	**26.9**	**0.8**	**21.6**	**79.8**	**102.1**	**4.5**
QVC11V200S QVVC11V200S	2 in.		2.12	2.20	2.99	4.47	5.38	3.80	6.38	4.50	0.63	7⁄16	3.18	1.06	0.03	0.85	3.14	4.02	10
QVC11V050S QVVC11V050S	**50 mm**																		
QVC12V203S QVVC12V203S	2 3⁄16 in.	22212	**51.3**	**53.3**	**80.3**	**127.0**	**152.4**	**107.7**	**185.4**	**127.0**	**14.7**	**12**	**80.0**	**28.7**	**0.3**	**22.1**	**79.8**	**102.1**	**5.9**
QVC12V204S QVVC12V204S	2 1⁄4 in.		2.02	2.10	3.16	5.00	6.00	4.24	7.30	5.00	0.58	1⁄2	3.15	1.13	0.01	0.87	3.14	4.02	13
QVC12V055S QVVC12V055S	**55 mm**																		
QVC14V060S QVVC14V060S	**60 mm**	22214	**56.1**	**58.2**	**94.0**	**139.7**	**165.1**	**116.8**	**193.8**	**139.7**	**17.5**	**12**	**84.6**	**28.7**	**3.8**	**16.5**	**81.0**	**101.3**	**7.3**
QVC14V207S QVVC14V207S	2 7⁄16 in.		2.21	2.29	3.70	5.50	6.50	4.60	7.63	5.50	0.69	1⁄2	3.33	1.13	0.15	0.65	3.19	3.99	16
QVC14V208S QVVC14V208S	2 1⁄2 in.																		
QVC14V065S QVVC14V065S	**65 mm**																		
QVC16V211S QVVC16V211S	2 11⁄16 in.	22216	**52.8**	**54.9**	**106.4**	**162.1**	**190.5**	**134.6**	**222.3**	**161.9**	**20.6**	**16**	**84.6**	**31.8**	**1.0**	**19.3**	**83.6**	**103.6**	**10.0**
QVC16V212S QVVC16V212S	2 3⁄4 in.		2.08	2.16	4.19	6.38	7.50	5.30	8.75	6.36	0.81	5⁄8	3.33	1.25	0.04	0.76	3.29	4.08	22
QVC16V070S QVVC16V070S	**70 mm**																		
QVC16V215S QVVC16V215S	2 15⁄16 in.																		
QVC16V300S QVVC16V300S	3 in.																		
QVC16V075S QVVC16V075S	**75 mm**																		

[1]Bearing part numbers use QV to designate single-nut units (uses Rv and Sv dimensions) and QVV to designate double-nut units (uses Rvv and Svv dimensions).
[2]Single-nut (QV) part number shown. Double-nut (QVV) version available upon request.
[3]Pilot tolerance: +0/-0.05 mm (+0/-0.002 in.).
[4]Six-bolt round housing.

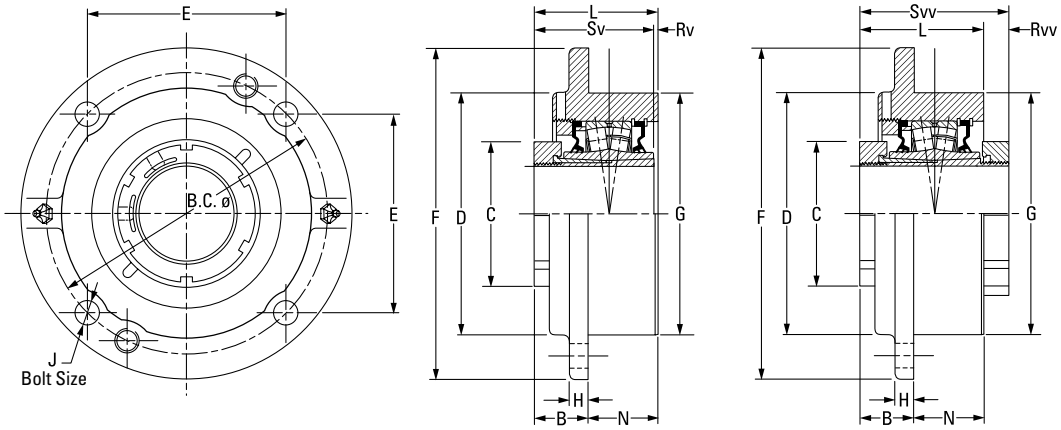

QV Single-Nut Unit[1]

QVV Double-Nut Unit[1]

Bearing Part No.[1][2]	Shaft Dia.	Bearing No.	B FIX	B EXP	C	D	B.C.	E	F	G[3]	H	J	L	N	Rv[1]	Rvv	Sv[1]	Svv	Wt.
	mm in.		**mm** in.	**mm** in.	**mm** in.	**mm** in.	**mm** in.	**mm** in.	**mm** in.	**mm** in.	**mm** in.	**mm** in.	**mm** in.	**mm** in.	**mm** in.	**mm** in.	**mm** in.	**mm** in.	**kg** lbs.
QVC19V303S QVVC19V303S	3 3⁄16 in.	22219	**62.5** 2.46	**64.5** 2.54	**124.5** 4.90	**199.1** 7.84	**219.2** 8.63	**154.9** 6.10	**262.6** 10.34	**187.3** 7.38	**25.4** 1.00	**20** 3⁄4	**95.8** 3.77	**33.3** 1.31	**2.0** 0.08	**18.5** 0.73	**93.7** 3.69	**114.0** 4.49	**14.5** 32
QVC19V304S QVVC19V304S	3 1⁄4 in.																		
QVC19V080S QVVC19V080S	**80 mm**																		
QVC19V085S QVVC19V085S	**85 mm**																		
QVC19V307S QVVC19V307S	3 7⁄16 in.																		
QVC19V308S QVVC19V308S	3 1⁄2 in.																		
QVC19V090S QVVC19V090S	**90 mm**																		
QVC22V311S QVVC22V311S	3 11⁄16 in.	22222	**60.2** 2.37	**62.2** 2.45	**139.7** 5.50	**222.5** 8.76	**238.3** 9.38	**168.4** 6.63	**276.4** 10.88	**206.4** 8.13	**25.4** 1.00	**20** 3⁄4	**115.3** 4.54	**54.1** 2.13	**10.4** 0.41	**11.7** 0.46	**104.9** 4.13	**126.7** 4.99	**19.5** 43
QVC22V312S QVVC22V312S	3 3⁄4 in.																		
QVC22V100S QVVC22V100S	**100 mm**																		
QVC22V315S QVVC22V315S	3 15⁄16 in.																		
QVC22V400S QVVC22V400S	4 in.																		
QVC26V110S[4] QVVC26V110S[4]	**110 mm**	22226	**86.4** 3.40	**88.4** 3.48	**174.8** 6.88	**260.4** 10.25	**298.5** 11.75[4]	**149.4** 5.88[4]	**342.9** 13.50	**260.4** 10.25	**25.4** 1.00	**20** 3/4[4]	**134.6** 5.30	**48.3** 1.90	**13.2** 0.52	**43.7** 1.72	**147.8** 5.82	**178.3** 7.02	**32.7** 72
QVC26V407S[4] QVVC26V407S[4]	4 7⁄16 in.																		
QVC26V408S[4] QVVC26V408S[4]	4 1⁄2 in.																		
QVC26V115S[4] QVVC26V115S[4]	**115 mm**																		

[1] Bearing part numbers use QV to designate single-nut units (uses Rv and Sv dimensions) and QVV to designate double-nut units (uses Rvv and Svv dimensions).
[2] Single-nut (QV) part number shown. Double-nut (QVV) version available upon request.
[3] Pilot tolerance: +0/-0.05 mm (+0/-0.002 in.).
[4] Six-bolt round housing.

QVCW AND QVVCW PILOTED FLANGE CARTRIDGES – STRAIGHT BORE EQUIVALENT

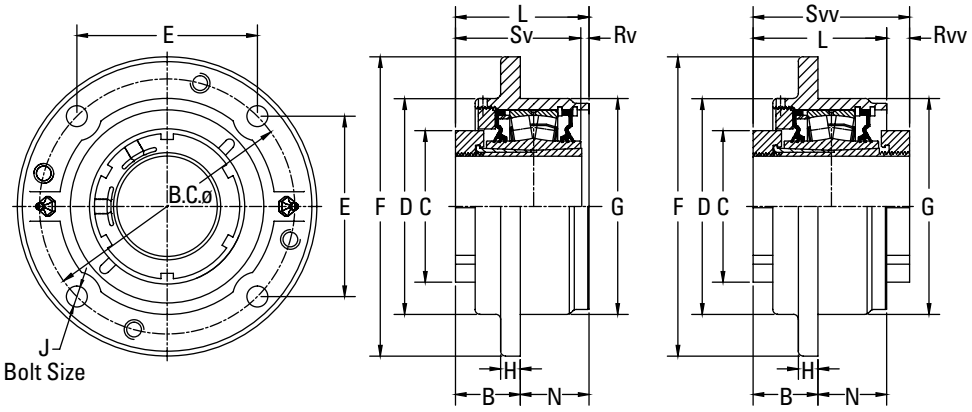

QV Single-Nut Unit[1] **QVV Double-Nut Unit[1]**

Bearing Part No.[1][2]	Shaft Dia.	Bearing No.	B FIX	B EXP	C	D	B.C.	E	F	G[3]	H	J	L	N	Rv[1]	Rvv	Sv[1]	Svv	Wt.
	mm in.		**mm** in.	**mm** in.	**mm** in.	**mm** in.	**mm** in.	**mm** in.	**mm** in.	**mm** in.	**mm** in.	**mm** in.	**mm** in.	**mm** in.	**mm** in.	**mm** in.	**mm** in.	**mm** in.	**kg** lbs.
QVCW11V115S QVVCW11V115S	1 15/16 in.	22211	**42.2** 1.66	**44.2** 1.74	**75.9** 2.99	**113.5** 4.47	**136.7** 5.38	**96.5** 3.80	**162.1** 6.38	**114.3** 4.50	**9.7** 0.38	**10** 7/16	**80.3** 3.16	**38.1** 1.50	**0.8** 0.03	**21.8** 0.86	**79.8** 3.14	**102.1** 4.02	**4.5** 10
QVCW11V200S QVVCW11V200S	2 in.																		
QVCW11V050S QVVCW11V050S	**50 mm**																		
QVCW12V203S QVVCW12V203S	2 3/16 in.	22212	**43.2** 1.70	**45.5** 1.79	**80.3** 3.16	**126.7** 4.99	**152.4** 6.00	**107.7** 4.24	**181.1** 7.13	**127.0** 5.00	**14.2** 0.56	**12** 1/2	**84.6** 3.33	**41.4** 1.63	**4.8** 0.19	**17.5** 0.69	**79.8** 3.14	**102.1** 4.02	**5.9** 13
QVCW12V204S QVVCW12V204S	2 1/4 in.																		
QVCW12V055S QVVCW12V055S	**55 mm**																		
QVCW14V060S QVVCW14V060S	**60 mm**	22214	**41.9** 1.65	**43.9** 1.73	**94.0** 3.70	**139.7** 5.50	**165.1** 6.50	**116.8** 4.60	**193.8** 7.63	**139.7** 5.50	**12.7** 0.50	**12** 1/2	**86.4** 3.40	**42.9** 1.69	**5.3** 0.21	**15.0** 0.59	**81.0** 3.19	**101.3** 3.99	**7.3** 16
QVCW14V207S QVVCW14V207S	2 7/16 in.																		
QVCW14V208S QVVCW14V208S	2 1/2 in.																		
QVCW14V065S QVVCW14V065S	**65 mm**																		
QVCW16V211S QVVCW16V211S	2 11/16 in.	22216	**37.6** 1.48	**39.6** 1.56	**106.4** 4.19	**162.1** 6.38	**190.5** 7.50	**134.6** 5.30	**222.3** 8.75	**161.9** 6.36	**12.7** 0.50	**16** 5/8	**85.1** 3.35	**47.8** 1.88	**1.8** 0.07	**18.5** 0.73	**83.6** 3.29	**103.6** 4.08	**10.0** 22
QVCW16V212S QVVCW16V212S	2 3/4 in.																		
QVCW16V070S QVVCW16V070S	**70 mm**																		
QVCW16V215S QVVCW16V215S	2 15/16 in.																		
QVCW16V300S QVVCW16V300S	3 in.																		
QVCW16V075S QVVCW16V075S	**75 mm**																		

[1]Bearing part numbers use QV to designate single-nut units (uses Rv and Sv dimensions) and QVV to designate double-nut units (uses Rvv and Svv dimensions).
[2]Single-nut (QV) part number shown. Double-nut (QVV) version available upon request.
[3]Pilot tolerance: +0/-0.05 mm (+0/-0.002 in.).
[4]Six-bolt round housing.

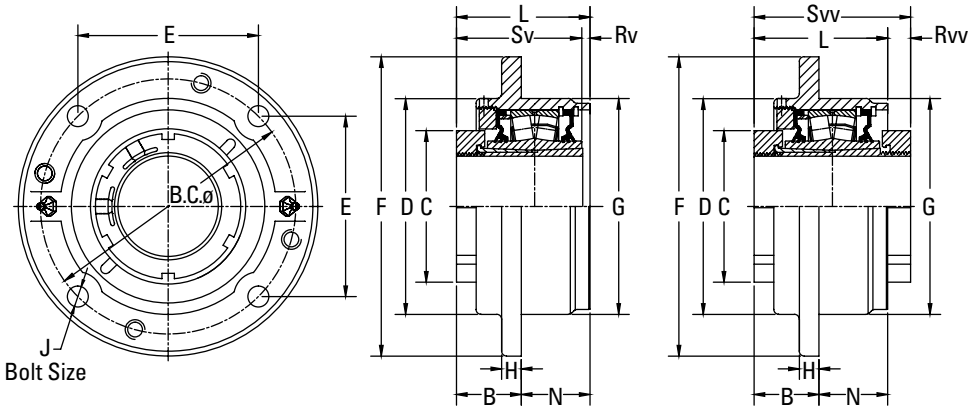

QV Single-Nut Unit[1] **QVV Double-Nut Unit[1]**

Bearing Part No.[1][2]	Shaft Dia.	Bearing No.	B FIX	B EXP	C	D	B.C.	E	F	G[3]	H	J	L	N	Rv[1]	Rvv	Sv[1]	Svv	Wt.
	mm in.		**mm** in.	**mm** in.	**mm** in.	**mm** in.	**mm** in.	**mm** in.	**mm** in.	**mm** in.	**mm** in.	**mm** in.	**mm** in.	**mm** in.	**mm** in.	**mm** in.	**mm** in.	**mm** in.	**kg** lbs.
QVCW19V303S QVVCW19V303S	3 3⁄16 in.	22219	**49.8** 1.96	**51.8** 2.04	**124.5** 4.90	**199.1** 7.84	**219.2** 8.63	**154.9** 6.10	**260.4** 10.25	**187.3** 7.36	**22.4** 0.88	**20** ¾	**97.5** 3.84	**47.8** 1.88	**3.8** 0.15	**16.8** 0.66	**93.7** 3.69	**114.0** 4.49	**14.5** 32
QVCW19V304S QVVCW19V304S	3 ¼ in.																		
QVCW19V080S QVVCW19V080S	**80 mm**																		
QVCW19V085S QVVCW19V085S	**85 mm**																		
QVCW19V307S QVVCW19V307S	3 7⁄16 in.																		
QVCW19V308S QVVCW19V308S	3 ½ in.																		
QVCW19V090S QVVCW19V090S	**90 mm**																		
QVCW22V311S QVVCW22V311S	3 11⁄16 in.	22222	**51.6** 2.03	**53.6** 2.11	**139.7** 5.50	**222.5** 8.76	**238.3** 9.38	**168.4** 6.63	**276.4** 10.88	**206.4** 8.13	**25.4** 1.00	**20** ¾	**109.7** 4.32	**57.2** 2.25	**4.8** 0.19	**17.3** 0.68	**104.9** 4.13	**126.7** 4.99	**19.5** 43
QVCW22V312S QVVCW22V312S	3 ¾ in.																		
QVCW22V100S QVVCW22V100S	**100 mm**																		
QVCW22V315S QVVCW22V315S	3 15⁄16 in.																		
QVCW22V400S QVVCW22V400S	4 in.																		
QVCW26V110S[4] QVVCW26V110S[4]	**110 mm**	22226	**72.4** 2.85	**74.4** 2.93	**174.8** 6.88	**260.4** 10.25	**298.5** 11.75[4]	**149.4** 5.88[4]	**342.9** 13.50	**260.4** 10.25	**25.4** 1.00[4]	**20** ¾	**140.5** 5.53	**68.3** 2.69	**7.4** 0.29	**37.8** 1.49	**147.8** 5.82	**178.3** 7.02	**32.7** 72
QVCW26V407S[4] QVVCW26V407S[4]	4 7⁄16 in.																		
QVCW26V408S[4] QVVCW26V408S[4]	4 ½ in.																		
QVCW26V115S[4] QVVCW26V115S[4]	**115 mm**																		
QVCW28V125S[4] QVVCW28V125S[4]	**125 mm**	22228	**66.5** 2.62	**68.6** 2.70	**190.0** 7.48	**266.7** 10.50	**323.9** 12.75[4]	**162.1** 6.38[4]	**374.7** 14.75	**279.4** 11.00	**26.2** 1.03[4]	**24** ⅞	**144.5** 5.69	**78.0** 3.07	**3.3** 0.13	**33.8** 1.33	**147.8** 5.82	**178.3** 7.02	**46.3** 102
QVCW28V415S[4] QVVCW28V415S[4]	4 15⁄16 in.																		
QVCW28V500S[4] QVVCW28V500S[4]	5 in.																		
QVCW28V130S[4] QVVCW28V130S[4]	**130 mm**																		

[1] Bearing part numbers use QV to designate single-nut units (uses Rv and Sv dimensions) and QVV to designate double-nut units (uses Rvv and Svv dimensions).
[2] Single-nut (QV) part number shown. Double-nut (QVV) version available upon request.
[3] Pilot tolerance: +0/-0.05 mm (+0/-0.002 in.).
[4] Six-bolt round housing.

QVMC AND QVVMC CARTRIDGE BLOCKS – TAPERED BORE EQUIVALENT

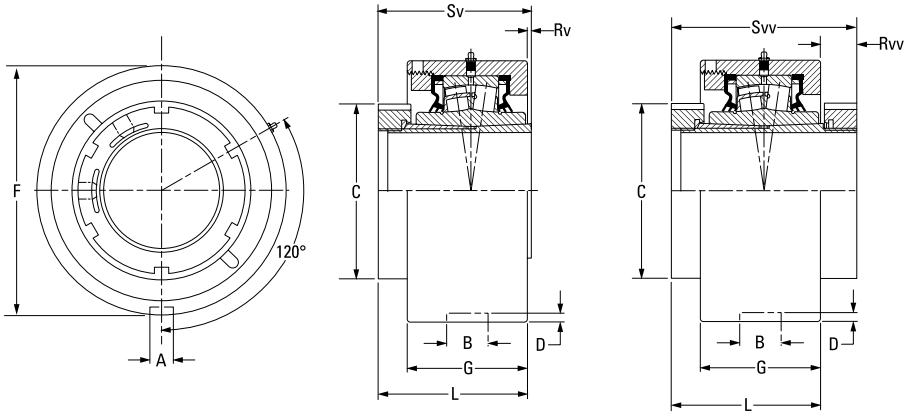

QV Single-Nut Unit[1]

QVV Double-Nut Unit[1]

Bearing Part No.[1][2]	Shaft Dia.	Bearing No.	A	B	C	D	F	G	L FIX	L EXP	Rv[1]	Rvv	Sv[1]	Svv	Wt.
	mm in.		**mm** in.	**mm** in.	**mm** in.	**mm** in.	**mm** in.	**mm** in.	**mm** in.	**mm** in.	**mm** in.	**mm** in.	**mm** in.	**mm** in.	**kg** lbs.
QVMC11V115S QVVMC11V115S	1 15⁄16 in.	22211	**13.5** 0.530	**23.0** 0.91	**75.9** 2.99	**4.8** 0.19	**115.09 (+0/-0.05)** 4.53 (+0/-0.002)	**55.4** 2.18	**79.0** 3.11	**81.0** 3.19	**0.8** 0.03	**23.1** 0.91	**79.8** 3.14	**102.1** 4.02	**4.5** 10
QVMC11V200S QVVMC11V200S	2 in.														
QVMC11V050S QVVMC11V050S	**50 mm**														
QVMC13V203S QVVMC13V203S	2 3⁄16 in.	22213	**13.5** 0.530	**23.0** 0.91	**80.3** 3.16	**4.8** 0.19	**127.00 (+0/-0.05)** 5.00 (+0/-0.002)	**67.1** 2.64	**85.9** 3.38	**87.9** 3.46	**0.5** 0.02	**21.8** 0.86	**85.3** 3.36	**107.7** 4.24	**5.4** 12
QVMC13V204S QVVMC13V204S	2 1⁄4 in.														
QVMC13V055S QVVMC13V055S	**55 mm**														
QVMC15V060S QVVMC15V060S	**60 mm**	22215	**15.1** 0.594	**26.2** 1.03	**94.0** 3.70	**6.4** 0.25	**149.23 (+0/-0.05)** 5.86 (+0/-0.002)	**70.6** 2.78	**87.4** 3.44	**89.4** 3.52	**5.1** 0.20	**16.5** 0.65	**82.6** 3.25	**103.9** 4.09	**8.2** 18
QVMC15V207S QVVMC15V207S	2 7⁄16 in.														
QVMC15V208S QVVMC15V208S	2 1⁄2 in.														
QVMC15V065S QVVMC15V065S	**65 mm**														
QVMC17V211S QVVMC17V211S	2 11⁄16 in.	22217	**15.1** 0.594	**27.5** 1.08	**106.4** 4.19	**7.1** 0.28	**171.45 (+0/-0.05)** 6.75 (+0/-0.002)	**74.9** 2.95	**91.2** 3.59	**93.2** 3.67	**6.4** 0.25	**15.0** 0.59	**84.6** 3.33	**106.2** 4.18	**11.8** 26
QVMC17V212S QVVMC17V212S	2 3⁄4 in.														
QVMC17V070S QVVMC17V070S	**70 mm**														
QVMC17V215S QVVMC17V215S	2 15⁄16 in.														
QVMC17V300S QVVMC17V300S	3 in.														
QVMC17V075S QVVMC17V075S	**75 mm**														

[1]Bearing part numbers use QV to designate single-nut units (uses Rv and Sv dimensions) and QVV to designate double-nut units (uses Rvv and Svv dimensions).
[2]Single-nut (QV) part number shown. Double-nut (QVV) version available upon request.

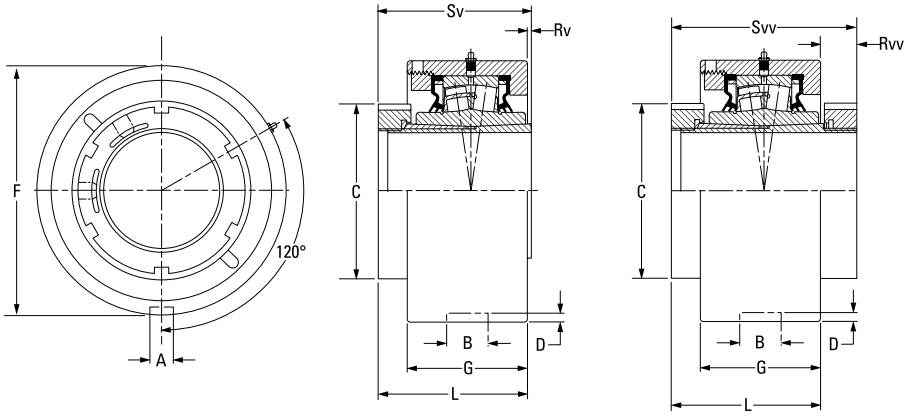

QV Single-Nut Unit[1] **QVV Double-Nut Unit**[1]

Bearing Part No.[1][2]	Shaft Dia.	Bearing No.	A	B	C	D	F	G	L FIX	L EXP	Rv[1]	Rvv	Sv[1]	Svv	Wt.
	mm in.		**mm** in.	**mm** in.	**mm** in.	**mm** in.	**mm** in.	**mm** in.	**mm** in.	**mm** in.	**mm** in.	**mm** in.	**mm** in.	**mm** in.	**kg** lbs.
QVMC20V303S QVVMC20V303S	3 3⁄16 in.	22220	**19.8** 0.781	**32.5** 1.28	**124.5** 4.90	**8.0** 0.31	**206.38 (+0/-0.05)** 8.13 (+0/-0.002)	**85.6** 3.37	**102.1** 4.02	**104.1** 4.10	**6.9** 0.27	**15.2** 0.60	**95.3** 3.75	**117.3** 4.62	**14.5** 32
QVMC20V304S QVVMC20V304S	3 1⁄4 in.														
QVMC20V080S QVVMC20V080S	**80 mm**														
QVMC20V085S QVVMC20V085S	**85 mm**														
QVMC20V307S QVVMC20V307S	3 7⁄16 in.														
QVMC20V308S QVVMC20V308S	3 1⁄2 in.														
QVMC20V090S QVVMC20V090S	**90 mm**														
QVMC22V311S QVVMC22V311S	3 11⁄16 in.	22222	**19.8** 0.781	**32.5** 1.28	**139.7** 5.50	**8.0** 0.31	**222.25 (+0/-0.08)** 8.75 (+0/-0.003)	**97.8** 3.85	**113.0** 4.45	**115.1** 4.53	**8.1** 0.32	**14.0** 0.55	**104.9** 4.13	**126.7** 4.99	**18.1** 40
QVMC22V312S QVVMC22V312S	3 3⁄4 in.														
QVMC22V100S QVVMC22V100S	**100 mm**														
QVMC22V315S QVVMC22V315S	3 15⁄16 in.														
QVMC22V400S QVVMC22V400S	4 in.														
QVMC26V110S QVVMC26V110S	**110 mm**	22226	**19.8** 0.780	**38.1** 1.50	**174.8** 6.88	**8.0** 0.31	**265.10 (+0/-0.08)** 10.44 (+0/-0.003)	**104.4** 4.11	**141.5** 5.57	**143.5** 5.65	**6.4** 0.25	**36.8** 1.45	**147.8** 5.82	**178.3** 7.02	**23.6** 52
QVMC26V407S QVVMC26V407S	4 7⁄16 in.														
QVMC26V408S QVVMC26V408S	4 1⁄2 in.														
QVMC26V115S QVVMC26V115S	**115 mm**														

[1] Bearing part numbers use QV to designate single-nut units (uses Rv and Sv dimensions) and QVV to designate double-nut units (uses Rvv and Svv dimensions).
[2] Single-nut (QV) part number shown. Double-nut (QVV) version available upon request.

QVVTU TAKE-UP BLOCKS – STRAIGHT BORE EQUIVALENT

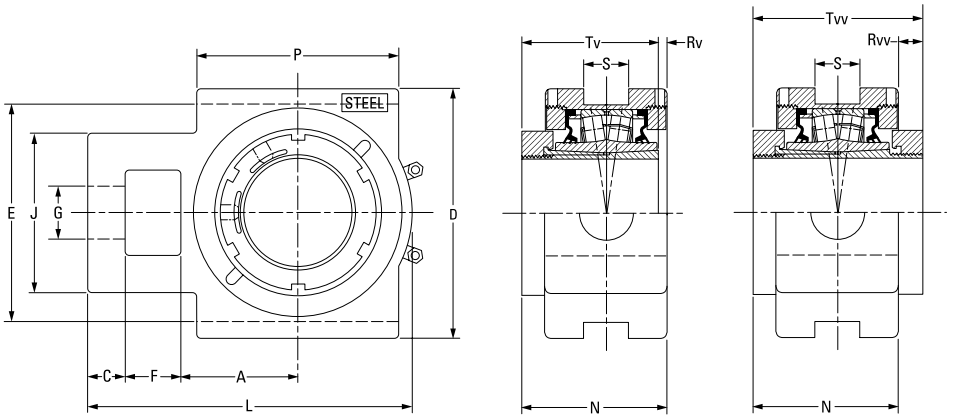

QV Single-Nut Unit **QVV Double-Nut Unit**

Bearing Part No.[1]	Shaft Dia.	Bearing No.	A	C	D	E	F	G	J	L	N	P	S	Rv[1]	Rvv	Tv[1]	Tvv	Wt.
	mm in.		**mm** in.	**mm** in.	**mm** in.	**mm** in.	**mm** in.	**mm** in.	**mm** in.	**mm** in.	**mm** in.	**mm** in.	**mm** in.	**mm** in.	**mm** in.	**mm** in.	**mm** in.	**kg** lbs.
QVVTU14V060S	**60 mm**	22214	**69.9** 2.75	**22.4** 0.88	**149.4** 5.88	**130.3** 5.13	**33.3** 1.31	**35.1** 1.38	**95.3** 3.75	**193.8** 7.63	**88.4** 3.48	**120.7** 4.75	**26.9** 1.06	**3.3** 0.13	**15.5** 0.61	**85.1** 3.35	**103.9** 4.09	**7.7** 17
QVVTU14V207S	2 7⁄16 in.																	
QVVTU14V208S	2 1⁄2 in.																	
QVVTU14V065S	**65 mm**																	
QVVTU16V211S	2 11⁄16 in.	22216	**76.2** 3.00	**25.4** 1.00	**171.5** 6.75	**150.9** 5.94	**39.6** 1.56	**39.6** 1.56	**108.0** 4.25	**219.7** 8.65	**90.2** 3.55	**120.7** 4.75	**46.0** 1.81	**2.3** 0.09	**16.3** 0.64	**87.6** 3.45	**106.2** 4.18	**15.9** 35
QVVTU16V212S	2 3⁄4 in.																	
QVVTU16V070S	**70 mm**																	
QVVTU16V215S	2 15⁄16 in.																	
QVVTU16V300S	3 in.																	
QVVTU16V075S	**75 mm**																	
QVVTU19V303S	3 3⁄16 in.	22219	**92.2** 3.63	**25.4** 1.00	**193.8** 7.63	**173.0** 6.81	**46.0** 1.81	**49.3** 1.94	**124.0** 4.88	**257.0** 10.12	**99.6** 3.92	**158.8** 6.25	**46.0** 1.81	**0.5** 0.02	**18.0** 0.71	**99.1** 3.90	**117.6** 4.63	**20.0** 44
QVVTU19V304S	3 1⁄4 in.																	
QVVTU19V080S	**80 mm**																	
QVVTU19V085S	**85 mm**																	
QVVTU19V307S	3 7⁄16 in.																	
QVVTU19V308S	3 1⁄2 in.																	
QVVTU19V090S	**90 mm**																	
QVVTU22V311S	3 11⁄16 in.	22222	**104.9** 4.13	**28.7** 1.13	**239.8** 9.44	**219.2** 8.63	**54.1** 2.13	**50.8** 2.00	**143.0** 5.63	**296.9** 11.69	**111.3** 4.21	**177.8** 7.00	**52.3** 2.06	**1.5** 0.32	**18.8** 0.55	**110.0** 4.13	**130.3** 4.99	**26.3** 58
QVVTU22V312S	3 3⁄4 in.																	
QVVTU22V100S	**100 mm**																	
QVVTU22V315S	3 15⁄16 in.																	
QVVTU22V400S	4 in.																	

[1]Double-nut (QVV) part number shown. Single-nut (QV) version available upon request.

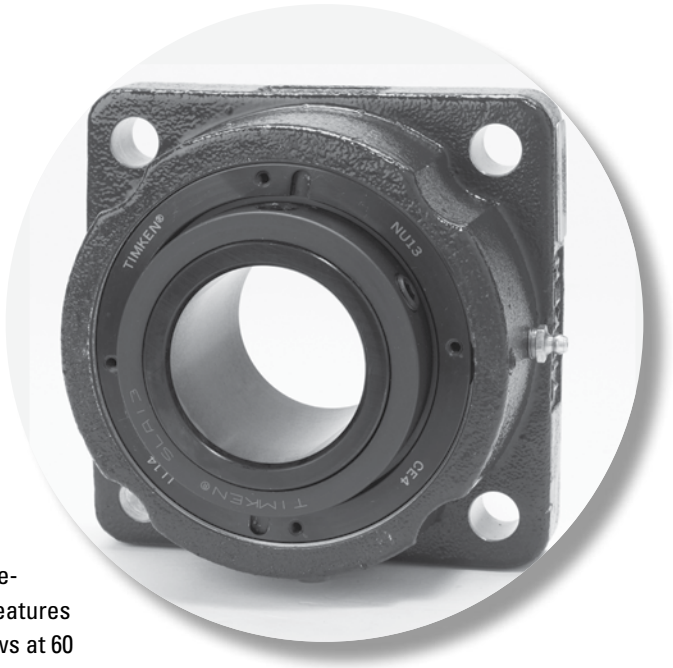

CL SERIES

Available in both single-collar (QA) and double-collar (QAA) versions, the CL bearing series features a concentric locking collar with two set screws at 60 degrees to provide maximum positive locking power with minimal run out.

The following topics are covered within this section:

Introduction. 138
QAP and QAAP Two-Bolt Pillow Blocks 139
QAPL and QAAPL Two-Bolt Pillow Blocks 143
QAPMD and QAAPMD Two-Bolt Pillow Blocks 145
QASN and QAASN SN-Style Two-Bolt Pillow Blocks 147
QAAPXT 5000 Series Two-Bolt Pillow Blocks. 149
QAPF and QAAPF Four-Bolt Pillow Blocks 150
QAPR and QAAPR Four-Bolt Pillow Blocks. 152
QAAPX 5000 Series Four-Bolt Pillow Blocks. 154
QAC and QAAC Piloted Flange Cartridges. 155
QACMD and QAACMD Piloted Flange Cartridges 157
QACW and QAACW Piloted Flange Cartridges. 159
QAF and QAAF Square Flange Blocks 161
QAFE and QAAFE Square Flange Blocks 163
QAFL and QAAFL Square Flange Blocks 165
QAFMD and QAAFMD Square Flange Blocks 167
QAFBB Bracket Flange Blocks 169
QAAFX 5000 Series Flange Blocks 170
QAFY and QAAFY Round Flange Blocks 171
QAMC and QAAMC Cartridge Blocks 173
QATU and QAATU Take-Up Blocks 175
QATP and QAATP Top Angle Take-Up Blocks. 177
QAMH and QAAMH Hanger Blocks 179

CL SERIES



Fig. 47. CL series single-collar (QA) insert available up to 100 mm (4 in.).



Fig. 48. CL series double-collar (QAA) insert for size ranges 50 mm – 130 mm (1 15⁄16 in. – 5 in.).

YOU HAVE CHOICES

For the CL series, you can select either single-collar or double-collar versions and choose from many seal configurations and housing styles, which are shown on page 15.

HOUSINGS

- Two-bolt pillow blocks
- Stainless steel two-bolt pillow blocks
- Four-bolt pillow blocks
- Flange blocks
- Stainless steel flange blocks
- Piloted flange cartridges
- Take-up blocks
- Cartridge blocks
- Hanger blocks

SEALS

- Labyrinth: DuPont™ Teflon® (T)
- Triple-lip: nitrile rubber (M), urethane (O) and Viton® (N)
- Double-lip: nitrile rubber (B) and Viton (C)
- Steel and urethane closed-end covers (CS)
- Steel and urethane open-end covers (CJ) with:
  - DuPont Teflon (T)
  - Triple-lip seal (DR)
  - V-ring seal (VR)
- Piloted flange cartridge backing plates (HSY) with:
  - Triple-lip seal (DR)
- Flange block backing plates (UFP)
  - V-ring (VR)

QAP AND QAAP TWO-BOLT PILLOW BLOCKS

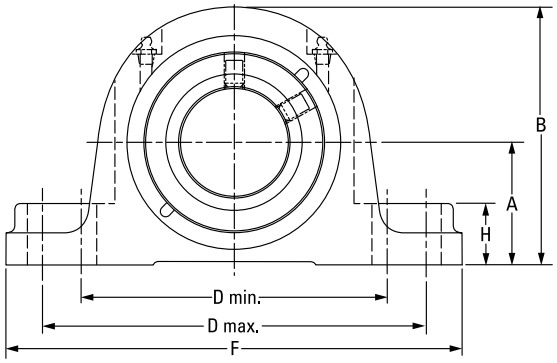

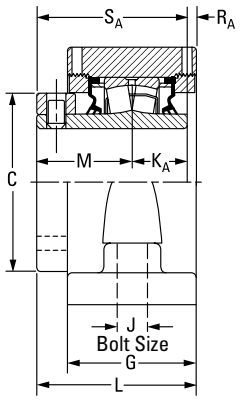

QA Single-Collar Unit

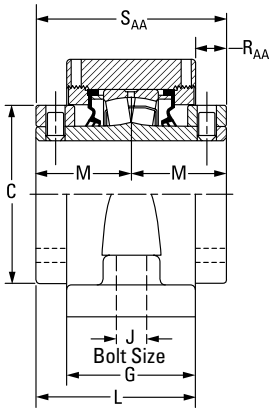

QAA Double-Collar Unit

Bearing Part No.[1][2]	Shaft Dia.	Bearing No.	A	B	C	D min.	D max.	F	G	H	J	K_A	L	M	R_A	R_{AA}	S_A	S_{AA}	Wt.
	mm in.		**mm** in.	**mm** in.	**mm** in.	**mm** in.	**mm** in.	**mm** in.	**mm** in.	**mm** in.	**mm** in.	**mm** in.	**mm** in.	**mm** in.	**mm** in.	**mm** in.	**mm** in.	**mm** in.	**kg** lbs.
QAP08A035S	**35 mm**	22208	**47.8** 1.88	**94.7** 3.73	**60.5** 2.38	**119.1** 4.69	**152.4** 6.00	**174.8** 6.88	**57.2** 2.25	**25.4** 1.00	**12** 1/2	**25.4** 1.00	**73.2** 2.88	**44.5** 1.75	**3.3** 0.13	–	**69.9** 2.75	–	**4.1** 9
QAP08A107S	1 7/16 in.																		
QAP08A108S	1 1/2 in.	22208	**54.1** 2.13	**101.1** 3.98	**60.5** 2.38	**119.1** 4.69	**165.1** 6.50	**200.2** 7.88	**57.2** 2.25	**25.4** 1.00	**12** 1/2	**25.4** 1.00	**73.2** 2.88	**44.5** 1.75	**3.3** 0.13	–	**69.9** 2.75	–	**4.1** 9
QAP09A111S	1 11/16 in.	22209	**54.1** 2.13	**104.9** 4.13	**66.8** 2.63	**144.8** 5.70	**165.1** 6.50	**200.2** 7.88	**60.2** 2.37	**31.8** 1.25	**12** 1/2	**25.4** 1.00	**78.0** 3.07	**47.8** 1.88	**4.8** 0.19	–	**73.2** 2.88	–	**4.5** 10
QAP09A040S	**40 mm**	22209	**57.2** 2.25	**108.0** 4.25	**66.8** 2.63	**158.8** 6.25	**180.8** 7.12	**225.6** 8.88	**62.0** 2.44	**31.8** 1.25	**16** 5/8	**25.4** 1.00	**78.7** 3.10	**47.8** 1.88	**5.6** 0.22	–	**73.2** 2.88	–	**4.5** 10
QAP09A112S	1 3/4 in.																		
QAP09A045S	**45 mm**																		
QAP10A115S QAAP10A115S	1 15/16 in.	22210	**57.2** 2.25	**122.2** 4.81	**73.2** 2.88	**152.4** 6.00	**181.1** 7.13	**225.6** 8.88	**62.0** 2.44	**31.8** 1.25	**16** 5/8	**25.4** 1.00	**79.0** 3.11	**47.5** 1.87	**6.1** 0.24	**17.0** 0.67	**72.9** 2.87	**95.3** 3.75	**5.9** 13
QAP10A200S QAAP10A200S	2 in.																		
QAP10A050S QAAP10A050S	**50 mm**																		
QAP11A203S QAAP11A203S	2 3/16 in.	22211	**63.5** 2.50	**133.4** 5.25	**82.6** 3.25	**165.1** 6.50	**200.2** 7.88	**244.6** 9.63	**66.8** 2.63	**31.8** 1.25	**16** 5/8	**28.7** 1.13	**84.3** 3.32	**50.8** 2.00	**4.8** 0.19	**17.5** 0.69	**79.5** 3.13	**101.6** 4.00	**7.7** 17
QAP11A204S QAAP11A204S	2 1/4 in.																		
QAP11A055S QAAP11A055S	**55 mm**																		
QAP13A060S QAAP13A060S	**60 mm**	22213	**69.9** 2.75	**147.3** 5.80	**96.8** 3.81	**174.8** 6.88	**219.2** 8.63	**260.4** 10.25	**73.7** 2.90	**35.1** 1.38	**16** 5/8	**31.5** 1.24	**91.4** 3.60	**54.6** 2.15	**5.3** 0.21	**17.8** 0.70	**86.1** 3.39	**109.2** 4.30	**10.0** 22
QAP13A207S QAAP13A207S	2 7/16 in.																		
QAP13A208S QAAP13A208S	2 1/2 in.																		
QAP13A065S QAAP13A065S	**65 mm**																		

[1]Bearing part numbers use QA to designate single-collar units (use S_A and R_A dimensions) and QAA to designate double-collar units (use S_{AA} and R_{AA} dimensions).

Continued on next page.

QAP AND QAAP TWO-BOLT PILLOW BLOCKS – *continued*

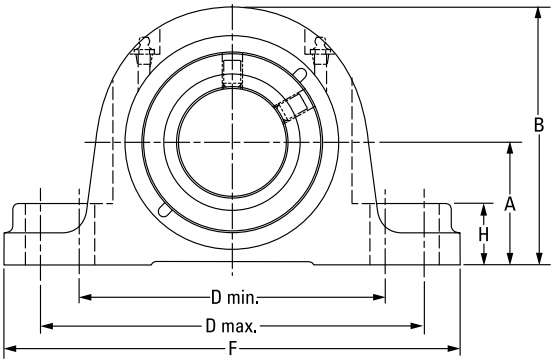

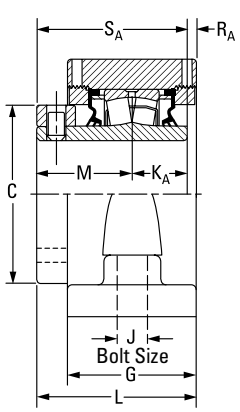

QA Single-Collar Unit

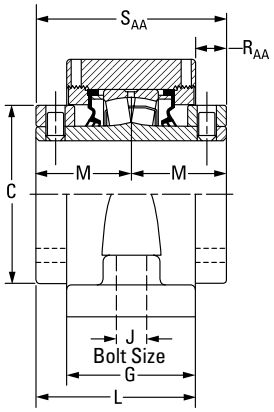

QAA Double-Collar Unit

Continued from previous page.

Bearing Part No.[1][2]	Shaft Dia.	Bearing No.	A	B	C	D min.	D max.	F	G	H	J	K_A	L	M	R_A	R_{AA}	S_A	S_{AA}	Wt.
	mm in.		**mm** in.	**mm** in.	**mm** in.	**mm** in.	**mm** in.	**mm** in.	**mm** in.	**mm** in.	**mm** in.	**mm** in.	**mm** in.	**mm** in.	**mm** in.	**mm** in.	**mm** in.	**mm** in.	**mm** in.	**kg** lbs.
QAP15A211S QAAP15A211S	2 11/16 in.	22215	**79.5** 3.13	**164.3** 6.47	**109.0** 4.29	**200.2** 7.88	**244.6** 9.63	**295.4** 11.63	**76.2** 3.00	**35.1** 1.38	**20** 3/4	**31.8** 1.25	**98.3** 3.87	**60.2** 2.37	**6.4** 0.25	**22.1** 0.87	**91.9** 3.62	**120.4** 4.74	**12.7** 28
QAP15A212S QAAP15A212S	2 3/4 in.																		
QAP15A070S QAAP15A070S	**70 mm**																		
QAP15A215S QAAP15A215S	2 15/16 in.																		
QAP15A300S QAAP15A300S	3 in.																		
QAP15A075S QAAP15A075S	**75 mm**																		
QAP18A303S QAAP18A303S	3 3/16 in.	22218	**95.3** 3.75	**195.3** 7.69	**130.3** 5.13	**238.3** 9.38	**285.8** 11.25	**342.9** 13.50	**86.6** 3.41	**47.8** 1.88	**24** 7/8	**36.6** 1.44	**109.2** 4.30	**65.8** 2.59	**6.9** 0.27	**22.6** 0.89	**102.4** 4.03	**131.6** 5.18	**20.4** 45
QAP18A304S QAAP18A304S	3 1/4 in.																		
QAP18A080S QAAP18A080S	**80 mm**																		
QAP18A085S QAAP18 A085S	**85 mm**																		
QAP18A307S QAAP18A307S	3 7/16 in.																		
QAP18A308S QAAP18A308S	3 1/2 in.																		
QAP18A090S QAAP18A090S	**90 mm**																		
QAP20A315S QAAP20A315S	3 15/16 in.	22220	**104.9** 4.13	**209.8** 8.26	**152.4** 6.00	**255.0** 10.04	**320.0** 12.60	**362.0** 14.25	**94.7** 3.73	**50.8** 2.00	**24** 1	**41.4** 1.63	**122.9** 4.84	**75.4** 2.97	**6.1** 0.24	**28.2** 1.11	**116.8** 4.60	**150.9** 5.94	**26.8** 59
QAP20A400S QAAP20A400S	4 in.																		
QAP20A100S QAAP20A100S	**100 mm**																		

[1]Bearing part numbers use QA to designate single-collar units (use S_A and R_A dimensions) and QAA to designate double-collar units (use S_{AA} and R_{AA} dimensions).

QAP AND QAAP STAINLESS STEEL TWO-BOLT PILLOW BLOCKS

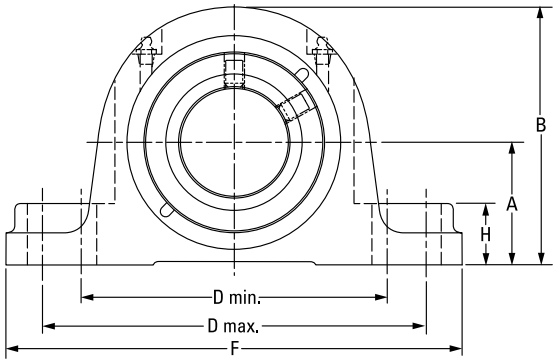

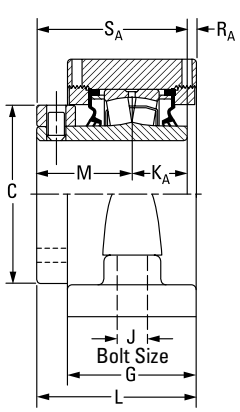

QA Single-Collar Unit

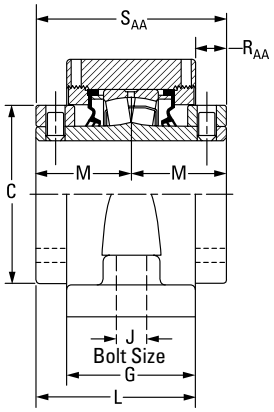

QAA Double-Collar Unit

Bearing Part No.[1][2]	Shaft Dia.	Bearing No.	A	B	C	D min.	D max.	F	G	H	J	K_A	L	M	R_A	R_{AA}	S_A	S_{AA}	Wt.
	mm in.		**mm** in.	**mm** in.	**mm** in.	**mm** in.	**mm** in.	**mm** in.	**mm** in.	**mm** in.	**mm** in.	**mm** in.	**mm** in.	**mm** in.	**mm** in.	**mm** in.	**mm** in.	**mm** in.	**kg** lbs.
QAP08A035SOSS	**35 mm**	22208	**47.8** 1.88	**94.7** 3.73	**60.5** 2.38	**119.1** 4.69	**152.4** 6.00	**174.8** 6.88	**57.2** 2.25	**25.4** 1.00	**12** 1/2	**25.4** 1.00	**73.2** 2.88	**44.5** 1.75	**3.3** 0.13	–	**69.9** 2.75	–	**4.1** 9
QAP08A107SOSS	1 7/16 in.																		
QAP08A108SOSS	1 1/2 in.	22208	**54.1** 2.13	**101.1** 3.98	**60.5** 2.38	**119.1** 4.69	**165.1** 6.50	**200.2** 7.88	**57.2** 2.25	**25.4** 1.00	**12** 1/2	**25.4** 1.00	**73.2** 2.88	**44.5** 1.75	**3.3** 0.13	–	**69.9** 2.75	–	**4.1** 9
QAP09A111SOSS	1 11/16 in.	22209	**54.1** 2.13	**104.9** 4.13	**66.8** 2.63	**144.8** 5.70	**165.1** 6.50	**200.2** 7.88	**60.2** 2.37	**31.8** 1.25	**12** 1/2	**25.4** 1.00	**78.0** 3.07	**47.8** 1.88	**4.8** 0.19	–	**73.2** 2.88	–	**4.5** 10
QAP09A040SOSS	**40 mm**	22209	**57.2** 2.25	**108.0** 4.25	**66.8** 2.63	**158.8** 6.25	**180.8** 7.12	**225.6** 8.88	**62.0** 2.44	**31.8** 1.25	**16** 5/8	**25.4** 1.00	**78.7** 3.10	**47.8** 1.88	**5.6** 0.22	–	**73.2** 2.88	–	**4.5** 10
QAP09A112SOSS	1 3/4 in.																		
QAP09A045SOSS	**45 mm**																		
QAP10A115SOSS QAAP10A115SOSS	1 15/16 in.	22210	**57.2** 2.25	**122.2** 4.81	**73.2** 2.88	**152.4** 6.00	**181.1** 7.13	**225.6** 8.88	**62.0** 2.44	**31.8** 1.25	**16** 5/8	**25.4** 1.00	**79.0** 3.11	**47.5** 1.87	**6.1** 0.24	**17.0** 0.67	**72.9** 2.87	**95.3** 3.75	**5.9** 13
QAP10A200SOSS QAAP10A200SOSS	2 in.																		
QAP10A050SOSS QAAP10A050SOSS	**50 mm**																		
QAP11A203SOSS QAAP11A203SOSS	2 3/16 in.	22211	**63.5** 2.50	**133.4** 5.25	**82.6** 3.25	**165.1** 6.50	**200.2** 7.88	**244.6** 9.63	**66.8** 2.63	**31.8** 1.25	**16** 5/8	**28.7** 1.13	**84.3** 3.32	**50.8** 2.00	**4.8** 0.19	**17.5** 0.69	**79.5** 3.13	**101.6** 4.00	**7.7** 17
QAP11A204SOSS QAAP11A204SOSS	2 1/4 in.																		
QAP11A055SOSS QAAP11A055SOSS	**55 mm**																		
QAP13A060SOSS QAAP13A060SOSS	**60 mm**	22213	**69.9** 2.75	**147.3** 5.80	**96.8** 3.81	**174.8** 6.88	**219.2** 8.63	**260.4** 10.25	**73.7** 2.90	**35.1** 1.38	**16** 5/8	**31.5** 1.24	**91.4** 3.60	**54.6** 2.15	**5.3** 0.21	**17.8** 0.70	**86.1** 3.39	**109.2** 4.30	**10.0** 22
QAP13A207SOSS QAAP13A207SOSS	2 7/16 in.																		
QAP13A208SOSS QAAP13A208SOSS	2 1/2 in.																		
QAP13A065SOSS QAAP13A065SOSS	**65 mm**																		

[1]Bearing part numbers use QA to designate single-collar units (use S_A and R_A dimensions) and QAA to designate double-collar units (use S_{AA} and R_{AA} dimensions).
[2]Part number shown with 'O' seals – additional seals available upon request.

Continued on next page.

QAP AND QAAP STAINLESS STEEL TWO-BOLT PILLOW BLOCKS – *continued*

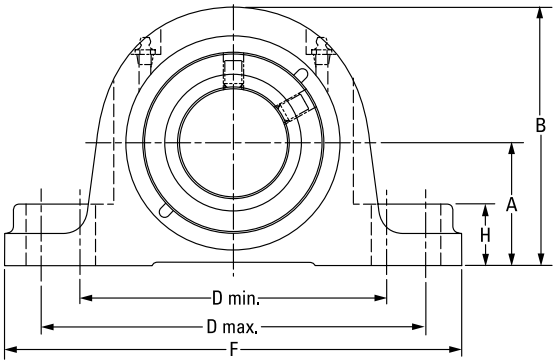

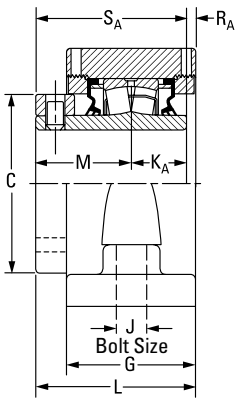

QA Single-Collar Unit

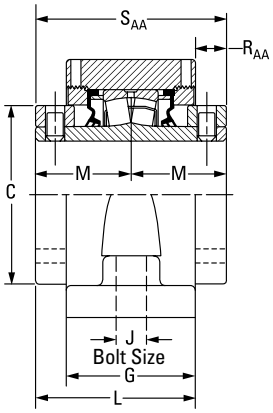

QAA Double-Collar Unit

Continued from previous page.

Bearing Part No.[1][2]	Shaft Dia.	Bearing No.	A	B	C	D min.	D max.	F	G	H	J	K_A	L	M	R_A	R_{AA}	S_A	S_{AA}	Wt.
	mm in.		**mm** in.	**mm** in.	**mm** in.	**mm** in.	**mm** in.	**mm** in.	**mm** in.	**mm** in.	**mm** in.	**mm** in.	**mm** in.	**mm** in.	**mm** in.	**mm** in.	**mm** in.	**mm** in.	**kg** lbs.
QAP15A211SOSS QAAP15A211SOSS	2 11/16 in.	22215	**79.5** 3.13	**164.3** 6.47	**109.0** 4.29	**200.2** 7.88	**244.6** 9.63	**295.4** 11.63	**76.2** 3.00	**35.1** 1.38	**20** 3/4	**31.8** 1.25	**98.3** 3.87	**60.2** 2.37	**6.4** 0.25	**22.1** 0.87	**91.9** 3.62	**120.4** 4.74	**12.7** 28
QAP15A212SOSS QAAP15A212SOSS	2 3/4 in.																		
QAP15A070SOSS QAAP15A070SOSS	**70 mm**																		
QAP15A215SOSS QAAP15A215SOSS	2 15/16 in.																		
QAP15A300SOSS QAAP15A300SOSS	3 in.																		
QAP15A075SOSS QAAP15A075SOSS	**75 mm**																		
QAP18A303SOSS QAAP18A303SOSS	3 3/16 in.	22218	**95.3** 3.75	**195.3** 7.69	**130.3** 5.13	**238.3** 9.38	**285.8** 11.25	**342.9** 13.50	**86.6** 3.41	**47.8** 1.88	**24** 7/8	**36.6** 1.44	**109.2** 4.30	**65.8** 2.59	**6.9** 0.27	**22.6** 0.89	**102.4** 4.03	**131.6** 5.18	**20.4** 45
QAP18A304SOSS QAAP18A304SOSS	3 1/4 in.																		
QAP18A080SOSS QAAP18A080SOSS	**80 mm**																		
QAP18A085SOSS QAAP18 A085SOSS	**85 mm**																		
QAP18A307SOSS QAAP18A307SOSS	3 7/16 in.																		
QAP18A308SOSS QAAP18A308SOSS	3 1/2 in.																		
QAP18A090SOSS QAAP18A090SOSS	**90 mm**																		
QAP20A315SOSS QAAP20A315SOSS	3 15/16 in.	22220	**104.9** 4.13	**209.8** 8.26	**152.4** 6.00	**255.0** 10.04	**320.0** 12.60	**362.0** 14.25	**94.7** 3.73	**50.8** 2.00	**24** 1	**41.4** 1.63	**122.9** 4.84	**75.4** 2.97	**6.1** 0.24	**28.2** 1.11	**116.8** 4.60	**150.9** 5.94	**26.8** 59
QAP20A400SOSS QAAP20A400SOSS	4 in.																		
QAP20A100SOSS QAAP20A100SOSS	**100 mm**																		

[1]Bearing part numbers use QA to designate single-collar units (use S_A and R_A dimensions) and QAA to designate double-collar units (use S_{AA} and R_{AA} dimensions).
[2]Part number shown with 'O' seals – additional seals available upon request.

QAPL AND QAAPL TWO-BOLT PILLOW BLOCKS

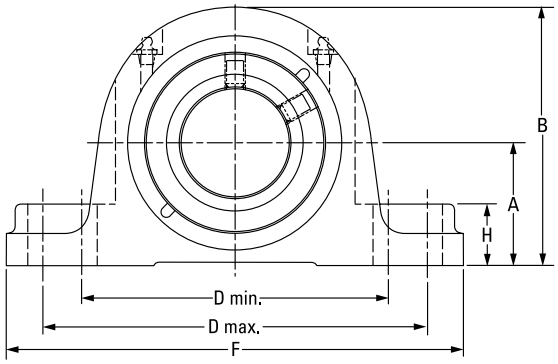

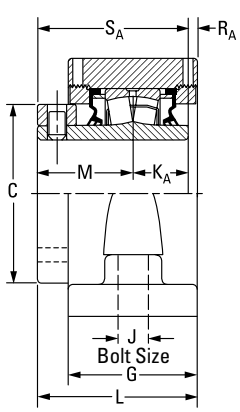

QA Single-Collar Unit

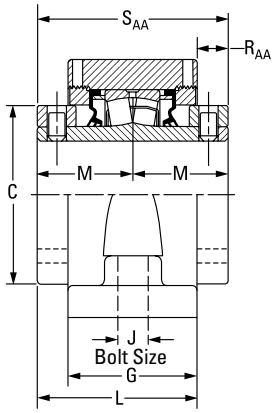

QAA Double-Collar Unit

Bearing Part No.[1]	Shaft Dia.	Bearing No.	A	B	C	D min.	D max.	F	G	H	J	K_A	L	M	R_A	R_{AA}	S_A	S_{AA}	Wt.
	mm in.		**mm** in.	**mm** in.	**mm** in.	**mm** in.	**mm** in.	**mm** in.	**mm** in.	**mm** in.	**mm** in.	**mm** in.	**mm** in.	**mm** in.	**mm** in.	**mm** in.	**mm** in.	**mm** in.	**kg** lbs.
QAPL08A035S	**35 mm**	22208	**47.8** 1.88	**94.7** 3.73	**60.5** 2.38	**119.1** 4.69	**152.4** 6.00	**174.8** 6.88	**57.2** 2.25	**25.4** 1.00	**12** 1/2	**25.4** 1.00	**73.2** 2.88	**44.5** 1.75	**3.3** 0.13	–	**69.9** 2.75	–	**4.1** 9
QAPL08A107S	1 7/16 in.																		
QAPL08A108S	1 1/2 in.																		
QAPL09A040S	**40 mm**	22209	**54.1** 2.13	**104.9** 4.13	**66.8** 2.63	**133.4** 5.25	**146.1** 5.75	**181.1** 7.13	**60.2** 2.37	**31.8** 1.25	**12** 1/2	**25.4** 1.00	**78.0** 3.07	**47.8** 1.88	**4.8** 0.19	–	**73.2** 2.88	–	**4.5** 10
QAPL09A111S	1 11/16 in.																		
QAPL09A112S	1 3/4 in.																		
QAPL09A045S	**45 mm**																		
QAPL10A115S QAAPL10A115S	1 15/16 in.	22210	**57.2** 2.25	**122.2** 4.81	**73.2** 2.88	**150.6** 5.93	**161.5** 6.36	**212.9** 8.38	**62.0** 2.44	**31.8** 1.25	**16** 5/8	**25.4** 1.00	**79.0** 3.11	**47.5** 1.87	**6.1** 0.24	**17.0** 0.67	**72.9** 2.87	**95.3** 3.75	**5.9** 13
QAPL10A200S QAAPL10A200S	2 in.																		
QAPL10A050S QAAPL10A050S	**50 mm**																		
QAPL11A203S QAAPL11A203S	2 3/16 in.	22211	**63.5** 2.50	**133.4** 5.25	**82.6** 3.25	**165.1** 6.50	**179.3** 7.06	**225.6** 8.88	**65.5** 2.58	**31.8** 1.25	**16** 5/8	**28.7** 1.13	**83.6** 3.29	**50.8** 2.00	**4.1** 0.16	**18.0** 0.71	**79.5** 3.13	**101.6** 4.00	**7.7** 17
QAPL11A204S QAAPL11A204S	2 1/4 in.																		
QAPL11A055S QAAPL11A055S	**55 mm**																		
QAPL13A060S QAAPL13A060S	**60 mm**	22213	**69.9** 2.75	**147.3** 5.80	**96.8** 3.81	**173.0** 6.81	**189.0** 7.44	**235.0** 9.25	**73.7** 2.90	**35.1** 1.38	**16** 5/8	**31.5** 1.24	**91.4** 3.60	**54.6** 2.15	**5.3** 0.21	**17.8** 0.70	**86.1** 3.39	**109.2** 4.30	**10.0** 22
QAPL13A207S QAAPL13A207S	2 7/16 in.																		
QAPL13A208S QAAPL13A208S	2 1/2 in.																		
QAPL13A065S QAAPL13A065S	**65 mm**																		

[1] Bearing part numbers use QA to designate single-collar units (use S_A and R_A dimensions) and QAA to designate double-collar units (use S_{AA} and R_{AA} dimensions).

Continued on next page.

QAPL AND QAAPL TWO-BOLT PILLOW BLOCKS – *continued*

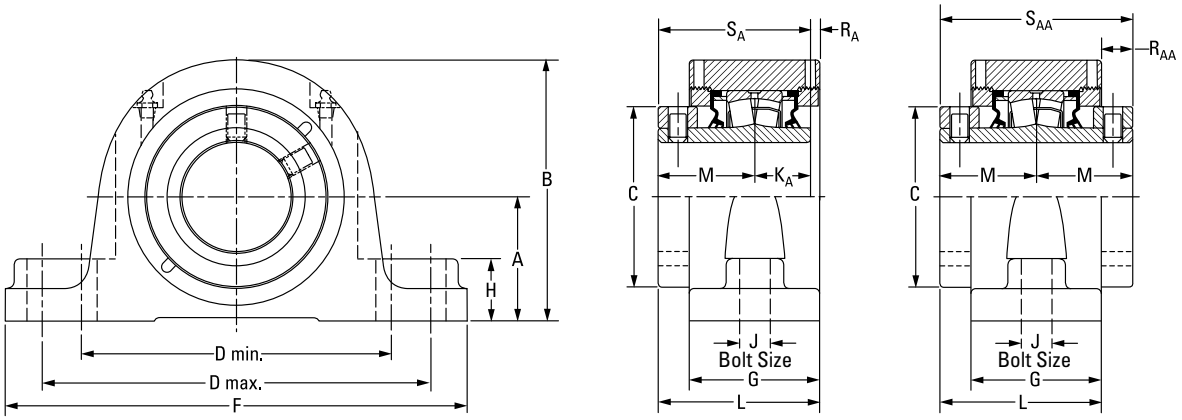

QA Single-Collar Unit **QAA Double-Collar Unit**

Continued from previous page.

Bearing Part No.[1]	Shaft Dia.	Bearing No.	A	B	C	D min.	D max.	F	G	H	J	K_A	L	M	R_A	R_{AA}	S_A	S_{AA}	Wt.
	mm in.		**mm** in.	**mm** in.	**mm** in.	**mm** in.	**mm** in.	**mm** in.	**mm** in.	**mm** in.	**mm** in.	**mm** in.	**mm** in.	**mm** in.	**mm** in.	**mm** in.	**mm** in.	**mm** in.	**kg** lbs.
QAPL15A211S QAAPL15A211S	2 1⁄16 in.	22215	**82.6** 3.25	**167.4** 6.59	**109.0** 4.29	**195.6** 7.70	**213.4** 8.40	**265.2** 10.44	**76.2** 3.00	**35.1** 1.38	**20** 3⁄4	**31.8** 1.25	**98.3** 3.87	**60.2** 2.37	**6.4** 0.25	**22.1** 0.87	**91.9** 3.62	**120.4** 4.74	**12.7** 28
QAPL15A212S QAAPL15A212S	2 3⁄4 in.																		
QAPL15A070S QAAPL15A070S	**70 mm**																		
QAPL15A215S QAAPL15A215S	2 15⁄16 in.																		
QAPL15A300S QAAPL15A300S	3 in.																		
QAPL15A075S QAAPL15A075S	**75 mm**																		
QAPL18A303S QAAPL18A303S	3 3⁄16 in.	22218	**95.3** 3.75	**195.3** 7.69	**130.3** 5.13	**235.0** 9.25	**273.1** 10.75	**330.2** 13.00	**86.6** 3.41	**47.8** 1.88	**24** 7⁄8	**36.6** 1.44	**109.2** 4.30	**65.8** 2.59	**6.9** 0.27	**22.6** 0.89	**102.4** 4.03	**131.6** 5.18	**20.4** 45
QAPL18A304S QAAPL18A304S	3 1⁄4 in.																		
QAPL18A080S QAAPL18A080S	**80 mm**																		
QAPL18A085S QAAPL18A085S	**85 mm**																		
QAPL18A307S QAAPL18A307S	3 7⁄16 in.																		
QAPL18A308S QAAPL18A308S	3 1⁄2 in.																		
QAPL18A090S QAAPL18A090S	**90 mm**																		
QAPL20A315S QAAPL20A315S	3 15⁄16 in.	22220	**108.0** 4.25	**212.9** 8.38	**152.4** 6.00	**255.0** 10.04	**320.0** 12.60	**362.0** 14.25	**94.7** 3.73	**54.1** 2.13	**24** 1	**41.4** 1.63	**122.9** 4.84	**75.4** 2.97	**6.1** 0.24	**28.2** 1.11	**116.8** 4.60	**150.9** 5.94	**26.8** 59
QAPL20A400S QAAPL20A400S	4 in.																		
QAPL20A100S QAAPL20A100S	**100 mm**																		

[1]Bearing part numbers use QA to designate single-collar units (use S_A and R_A dimensions) and QAA to designate double-collar units (use S_{AA} and R_{AA} dimensions).

QAPMD AND QAAPMD TWO-BOLT PILLOW BLOCKS

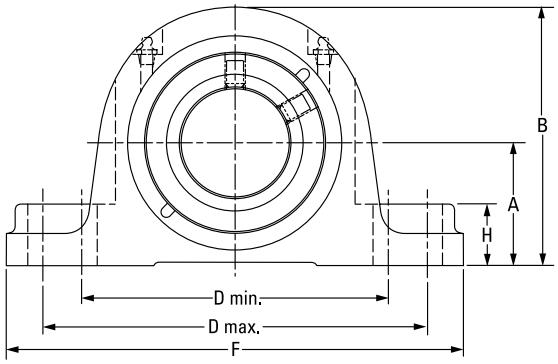

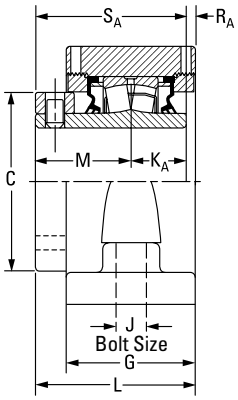

QA Single-Collar Unit

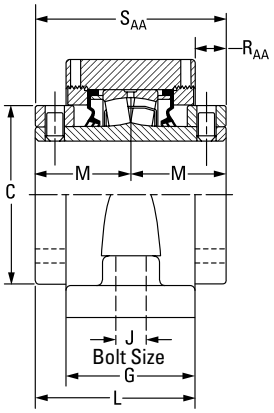

QAA Double-Collar Unit

Bearing Part No.[1]	Shaft Dia.	Bearing No.	A	B	C	D min.	D max.	F	G	H	J	K_A	L	M	R_A	R_{AA}	S_A	S_{AA}	Wt.
	mm in.		**mm** in.	**mm** in.	**mm** in.	**mm** in.	**mm** in.	**mm** in.	**mm** in.	**mm** in.	**mm** in.	**mm** in.	**mm** in.	**mm** in.	**mm** in.	**mm** in.	**mm** in.	**mm** in.	**kg** lbs.
QAPMD08A035S	**35 mm**	22208	**54.1** 2.13	**110.5** 4.35	**60.5** 2.38	**131.6** 5.18	**149.4** 5.88	**184.2** 7.25	**57.2** 2.25	**25.4** 1.00	**12** 1/2	**25.4** 1.00	**73.2** 2.88	**44.5** 1.75	**3.3** 0.13	–	**69.9** 2.75	–	**4.1** 9
QAPMD08A107S	1 7/16 in.																		
QAPMD08A108S	1 1/2 in.	22208	**54.1** 2.13	**110.5** 4.35	**60.5** 2.38	**131.6** 5.18	**149.4** 5.88	**184.2** 7.25	**57.2** 2.25	**25.4** 1.00	**12** 1/2	**25.4** 1.00	**73.2** 2.88	**44.5** 1.75	**3.3** 0.13	–	**69.9** 2.75	–	**4.1** 9
QAPMD09A110S	1 5/8 in.	22209	**54.1** 2.13	**113.3** 4.46	**66.8** 2.63	**139.7** 5.5	**157.2** 6.19	**189.0** 7.44	**62.0** 2.44	**25.4** 1.00	**12** 1/2	**25.4** 1.00	**78.7** 3.10	**47.8** 1.88	**5.6** 0.22	–	**73.2** 2.88	–	**4.5** 10
QAPMD09A040S	**40 mm**																		
QAPMD09A111S	1 11/16 in.	22209	**57.2** 2.25	**116.3** 4.58	**66.8** 2.63	**152.4** 6.00	**169.7** 6.68	**206.2** 8.12	**62.0** 2.44	**31.8** 1.25	**16** 5/8	**25.4** 1.00	**78.7** 3.10	**47.8** 1.88	**5.6** 0.22	–	**73.2** 2.88	–	**4.5** 10
QAPMD09A112S	1 3/4 in.																		
QAPMD09A045S	**45 mm**																		
QAPMD10A115S QAAPMD10A115S	1 15/16 in.	22210	**63.5** 2.50	**127.0** 5.00	**73.2** 2.88	**162.1** 6.38	**189.0** 7.44	**225.6** 8.88	**62.0** 2.44	**31.8** 1.25	**16** 5/8	**25.4** 1.00	**79.0** 3.11	**47.5** 1.87	**6.1** 0.24	**17.0** 0.67	**72.9** 2.87	**95.3** 3.75	**5.9** 13
QAPMD10A200S QAAPMD10A200S	2 in.																		
QAPMD10A050S QAAPMD10A050S	**50 mm**																		
QAPMD11A203S QAAPMD11A203S	2 3/16 in.	22211	**69.9** 2.75	**139.7** 5.50	**82.6** 3.25	**174.8** 6.88	**201.7** 7.94	**241.3** 9.50	**66.8** 2.63	**38.1** 1.50	**16** 5/8	**28.7** 1.13	**84.3** 3.32	**50.8** 2.00	**4.8** 0.19	**17.5** 0.69	**79.5** 3.13	**101.6** 4.00	**7.7** 17
QAPMD11A204S QAAPMD11A204S	2 1/4 in.																		
QAPMD11A055S QAAPMD11A055S	**55 mm**																		
QAPMD13A060S QAAPMD13A060S	**60 mm**	22213	**76.2** 3.00	**153.7** 6.05	**96.5** 3.80	**190.5** 7.50	**223.0** 8.78	**273.1** 10.75	**73.7** 2.90	**34.9** 1.38	**20** 3/4	**31.5** 1.24	**91.4** 3.60	**54.6** 2.15	**5.3** 0.21	**17.8** 0.70	**86.1** 3.39	**109.2** 4.30	**10.0** 22
QAPMD13A207S QAAPMD13A207S	2 7/16 in.																		
QAPMD13A208S QAAPMD13A208S	2 1/2 in.																		
QAPMD13A065S QAAPMD13A065S	**65 mm**																		

[1]Bearing part numbers use QA to designate single-collar units (use S_A and R_A dimensions) and QAA to designate double-collar units (use S_{AA} and R_{AA} dimensions).

Continued on next page.

QAPMD AND QAAPMD TWO-BOLT PILLOW BLOCKS – *continued*

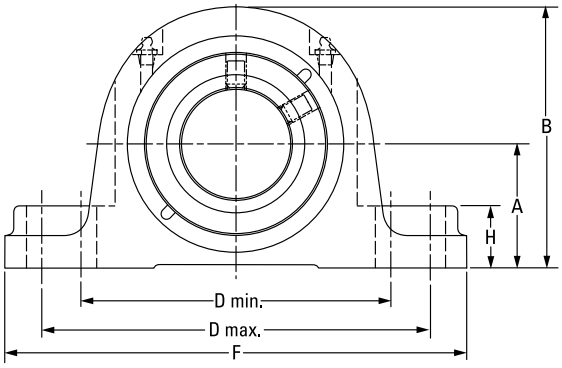

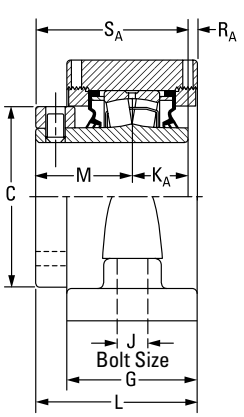

QA Single-Collar Unit

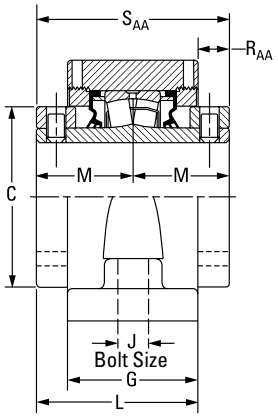

QAA Double-Collar Unit

Continued from previous page.

Bearing Part No.[1]	Shaft Dia.	Bearing No.	A	B	C	D min.	D max.	F	G	H	J	K_A	L	M	R_A	R_{AA}	S_A	S_{AA}	Wt.
	mm in.		**mm** in.	**mm** in.	**mm** in.	**mm** in.	**mm** in.	**mm** in.	**mm** in.	**mm** in.	**mm** in.	**mm** in.	**mm** in.	**mm** in.	**mm** in.	**mm** in.	**mm** in.	**mm** in.	**kg** lbs.
QAPMD15A211S QAAPMD15A211S	2 1/16 in.	22215	**88.9** 3.50	**171.5** 6.75	**109.0** 4.29	**215.9** 8.50	**241.3** 9.50	**298.5** 11.75	**76.2** 3.00	**38.1** 1.50	**24** 7/8	**31.8** 1.25	**98.3** 3.87	**60.2** 2.37	**6.4** 0.25	**22.1** 0.87	**91.9** 3.62	**120.4** 4.74	**12.7** 28
QAPMD15A212S QAAPMD15A212S	2 3/4 in.																		
QAPMD15A070S QAAPMD15A070S	**70 mm**																		
QAPMD15A215S QAAPMD15A215S	2 15/16 in.																		
QAPMD15A300S QAAPMD15A300S	3 in.																		
QAPMD15A075S QAAPMD15A075S	**75 mm**																		
QAPMD18A303S QAAPMD18A303S	3 3/16 in.	22218	**101.6** 4.00	**201.7** 7.94	**130.3** 5.13	**262.1** 10.32	**295.1** 11.62	**344.9** 13.58	**85.9** 3.38	**28.4** 1.12	**24** 7/8	**36.6** 1.44	**108.7** 4.28	**65.8** 2.59	**6.35** 0.25	**22.9** 0.90	**102.4** 4.03	**131.6** 5.18	**20.4** 45
QAPMD18A304S QAAPMD18A304S	3 1/4 in.																		
QAPMD18A080S QAAPMD18A080S	**80 mm**																		
QAPMD18A085S QAAPMD18A085S	**85 mm**																		
QAPMD18A307S QAAPMD18A307S	3 7/16 in.																		
QAPMD18A308S QAAPMD18A308S	3 1/2 in.																		
QAPMD18A090S QAAPMD18A090S	**90 mm**																		

QASN AND QAASN SN-STYLE TWO-BOLT PILLOW BLOCKS – PURE METRIC DESIGN

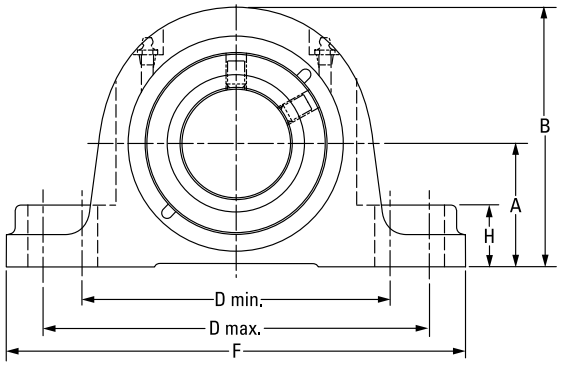

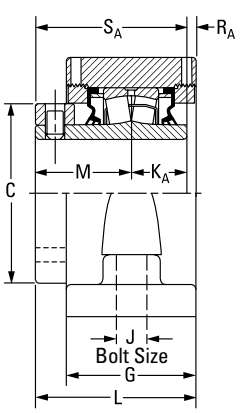

QA Single-Collar Unit

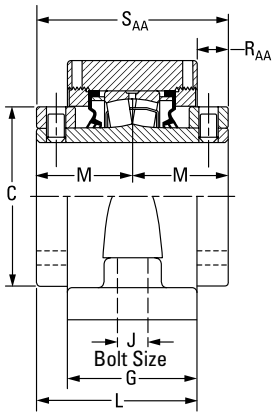

QAA Double-Collar Unit

Bearing Part No.[1]	Shaft Dia.	Bearing No.	A	B	C	D min.	D max.	F	G	H	J	K_A	L	M	R_A	R_{AA}	S_A	S_{AA}	Wt.
	mm in.		**mm** in.	**mm** in.	**mm** in.	**mm** in.	**mm** in.	**mm** in.	**mm** in.	**mm** in.	**mm** in.	**mm** in.	**mm** in.	**mm** in.	**mm** in.	**mm** in.	**mm** in.	**mm** in.	**kg** lbs.
QASN08A035S	**35 mm**	22208	**60** 2.36	**111** 4.37	**60.5** 2.38	**159** 6.26	**175** 6.89	**205** 8.07	**62** 2.44	**35** 1.38	**12** 1/2	**25** 1.00	**75** 2.95	**44** 1.75	**5** 0.20	–	**70** 2.75	–	**10.5** 23
QASN08A107S	1 7/16 in.																		
QASN08A108S	1 1/2 in.																		
QASN09A040S	**40 mm**	22209	**60** 2.36	**111** 4.37	**66.8** 2.63	**159** 6.26	**175** 6.89	**205** 8.07	**62** 2.44	**35** 1.38	**12** 1/2	**25** 1.00	**79** 3.10	**48** 1.88	**6** 0.22	–	**73** 2.88	–	**10.5** 23
QASN09A111S	1 11/16 in.																		
QASN09A112S	1 3/4 in.																		
QASN09A045S	**45 mm**																		
QASN10A115S QAASN10A115S	1 15/16 in.	22210	**70** 2.76	**136** 5.35	**73** 2.87	**183** 7.20	**216** 8.50	**254** 10.00	**68** 2.68	**25** 0.98	**16** 5/8	**25.4** 1.00	**82** 3.23	**48** 1.87	**9** 0.35	**14** 0.55	**73** 2.87	**95** 3.75	**12.7** 28
QASN10A200S QAASN10A200S	2 in.																		
QASN10A050S QAASN10A050S	**50 mm**																		
QASN11A203S QAASN11A203S	2 3/16 in.	22211	**70** 2.76	**141** 5.55	**83** 3.27	**183** 7.20	**216** 8.50	**254** 10.00	**68** 2.68	**25** 0.98	**16** 5/8	**29** 1.14	**85** 3.35	**51** 2.01	**5** 0.20	**17** 0.67	**80** 3.15	**102** 4.02	**13.2** 29
QASN11A204S QAASN11A204S	2 1/4 in.																		
QASN11A055S QAASN11A055S	**55 mm**																		
QASN13A060S QAASN13A060S	**60 mm**	22213	**80** 3.15	**157** 6.18	**96.8** 3.81	**196** 7.72	**235** 9.25	**275** 10.83	**74** 2.91	**35** 1.38	**16** 5/8	**31** 1.22	**92** 3.62	**55** 2.17	**6** 0.24	**18** 0.71	**86** 3.39	**110** 4.33	**15.9** 35
QASN13A207S QAASN13A207S	2 7/16 in.																		
QASN13A208S QAASN13A208S	2 1/2 in.																		
QASN13A065S QAASN13A065S	**65 mm**																		
QASN15A211S QAASN15A211S	2 11/16 in.	22215	**95** 3.74	**183** 7.20	**109.0** 4.29	**241** 9.49	**279** 10.98	**316** 12.44	**76** 2.99	**34** 1.34	**20** 3/4	**32** 1.26	**98** 3.86	**60** 2.36	**6** 0.24	**22** 0.87	**92** 3.62	**120** 4.72	**20.9** 46
QASN15A212S QAASN15A212S	2 3/4 in.																		
QASN15A070S QAASN15A070S	**70 mm**																		
QASN15A215S QAASN15A215S	2 15/16 in.																		
QASN15A300S QAASN15A300S	3 in.																		
QASN15A075S QAASN15A075S	**75 mm**																		

[1]Bearing part numbers use QA to designate single-collar units (use S_A and R_A dimensions) and QAA to designate double-collar units (use S_{AA} and R_{AA} dimensions).

Continued on next page.

QASN AND QAASN SN-STYLE TWO-BOLT PILLOW BLOCKS – PURE METRIC DESIGN – *continued*

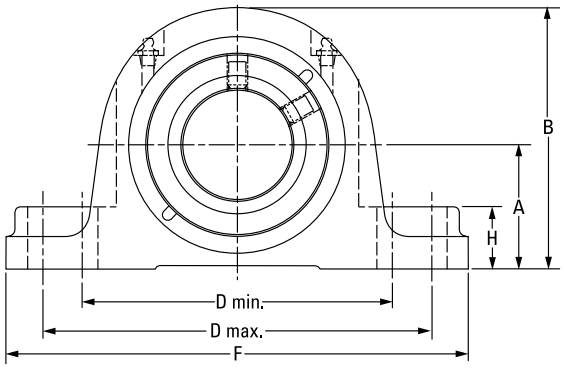

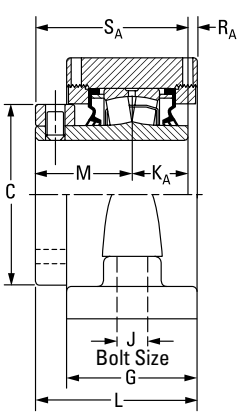

QA Single-Collar Unit

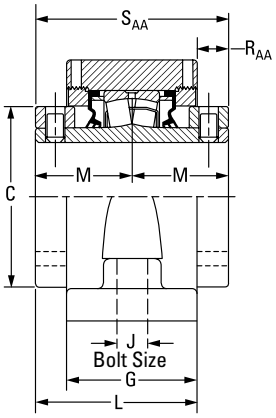

QAA Double-Collar Unit

Continued from previous page.

Bearing Part No.[1]	Shaft Dia.	Bearing No.	A	B	C	D min.	D max.	F	G	H	J	K_A	L	M	R_A	R_{AA}	S_A	S_{AA}	Wt.
	mm in.		**mm** in.	**mm** in.	**mm** in.	**mm** in.	**mm** in.	**mm** in.	**mm** in.	**mm** in.	**mm** in.	**mm** in.	**mm** in.	**mm** in.	**mm** in.	**mm** in.	**mm** in.	**mm** in.	**kg** lbs.
QASN18A303S QAASN18A303S	3 3⁄16 in.	22218	**100** 3.94	**200** 7.87	**130** 5.12	**279** 10.98	**292** 11.50	**345** 13.58	**86** 3.39	**39** 1.54	**20** 3⁄4	**37** 1.46	**109** 4.29	**66** 2.60	**6** 0.24	**23** 0.91	**102** 4.02	**132** 5.20	**25.5** 56
QASN18A304S QAASN18A304S	3 1⁄4 in.																		
QASN18A080S QAASN18A080S	**80 mm**																		
QASN18A085S QAASN18A085S	**85 mm**	22218	**112** 4.41	**212** 8.35	**130** 5.12	**279** 10.98	**292** 11.50	**345** 13.58	**86** 3.39	**39** 1.54	**20** 3⁄4	**37** 1.46	**109** 4.29	**66** 2.60	**6** 0.24	**23** 0.91	**102** 4.02	**132** 5.20	**25.5** 56
QASN18A307S QAASN18A307S	3 7⁄16 in.	22218	**112** 4.41	**212** 8.35	**130** 5.12	**290** 11.42	**327** 12.87	**380** 14.96	**86** 3.39	**39** 1.54	**24** 7⁄8	**37** 1.46	**109** 4.29	**66** 2.60	**6** 0.24	**23** 0.91	**102** 4.02	**132** 5.20	**25.5** 56
QASN18A308S QAASN18A308S	3 1⁄2 in.																		
QASN18A090S QAASN18A090S	**90 mm**																		
QASN20A315S QAASN20A315S	3 15⁄16 in.	22220	**125** 4.92	**241** 9.49	**152** 5.98	**319** 12.56	**366** 14.41	**410** 16.14	**101** 3.98	**50** 1.97	**24** 7⁄8	**41** 1.61	**126** 4.96	**75** 2.95	**10** 0.39	**25** 0.98	**117** 4.61	**150** 5.91	**35.9** 79
QASN20A400S QAASN20A400S	4 in.																		
QASN20A100S QAASN20A100S	**100 mm**																		
QAASN22A110S	**110 mm**	22222	**140** 5.51	**255** 10.04	**160** 6.30	**332** 13.07	**365** 14.37	**410** 16.14	**105** 4.13	**39** 1.54	**24** 7⁄8	–	**133** 5.24	**80** 3.15	–	**28** 1.10	–	**160** 6.30	**35.9** 79
QAASN22A407S	4 7⁄16 in.	22222	**150** 5.91	**265** 10.43	**160** 6.30	**367** 14.45	**400** 15.75	**445** 17.52	**105** 4.13	**49** 1.93	**24** 7⁄8	–	**133** 5.24	**80** 3.15	–	**28** 1.10	–	**160** 6.30	**40.0** 88
QAASN22A408S	4 1⁄2 in.																		
QAASN22A115S	**115 mm**																		
QAASN26A125S	**125 mm**	22226	**150** 5.91	**282** 11.10	**175** 6.89	**402** 15.83	**435** 17.13	**500** 19.69	**113** 4.45	**49** 1.93	**30** 1 1⁄4	–	**151** 5.94	**94** 3.70	–	**38** 1.50	–	**188** 7.40	**40.0** 88
QAASN26A415S	4 15⁄16 in.																		
QAASN26A500S	5 in.																		
QAASN26A130S	**130 mm**																		

[1]Bearing part numbers use QA to designate single-collar units (use S_A and R_A dimensions) and QAA to designate double-collar units (use S_{AA} and R_{AA} dimensions).

QAAPXT 5000 SERIES TWO-BOLT PILLOW BLOCKS

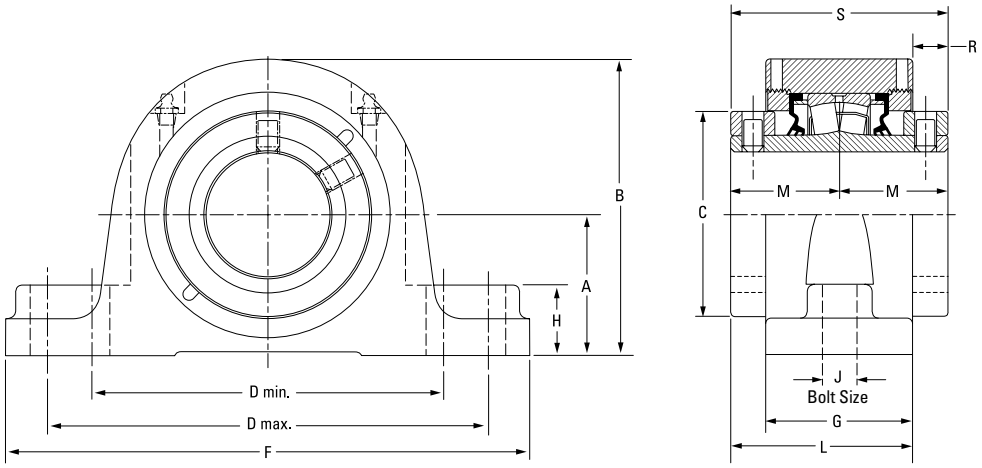

Bearing Part No.	Shaft Dia.	Bearing No.	A	B	C	D min.	D max.	F	G	H	J	L	M	R	S	Wt.
	mm in.		**mm** in.	**mm** in.	**mm** in.	**mm** in.	**mm** in.	**mm** in.	**mm** in.	**mm** in.	**mm** in.	**mm** in.	**mm** in.	**mm** in.	**mm** in.	**kg** lbs.
QAAPXT13A060S	**60 mm**	22213	**76.2** 3.00	**153.7** 6.05	**96.8** 3.81	**194.6** 7.66	**223.0** 8.78	**285.8** 11.25	**73.7** 2.90	**35.1** 1.38	**20** 3/4	**91.4** 3.60	**54.6** 2.15	**17.8** 0.70	**109.2** 4.30	**10.0** 22
QAAPXT13A207S	2 7/16 in.															
QAAPXT13A208S	2 1/2 in.															
QAAPXT13A065S	**65 mm**															
QAAPXT15A211S	2 11/16 in.	22215	**88.9** 3.50	**173.7** 6.84	**109.0** 4.29	**230.1** 9.06	**265.2** 10.44	**330.2** 13.00	**75.7** 2.98	**35.1** 1.38	**24** 7/8	**98.0** 3.86	**60.2** 2.37	**22.4** 0.88	**120.4** 4.74	**12.7** 28
QAAPXT15A212S	2 3/4 in.															
QAAPXT15A070S	**70 mm**															
QAAPXT15A215S	2 15/16 in.															
QAAPXT15A300S	3 in.															
QAAPXT15A075S	**75 mm**															

QAPF AND QAAPF FOUR-BOLT PILLOW BLOCKS

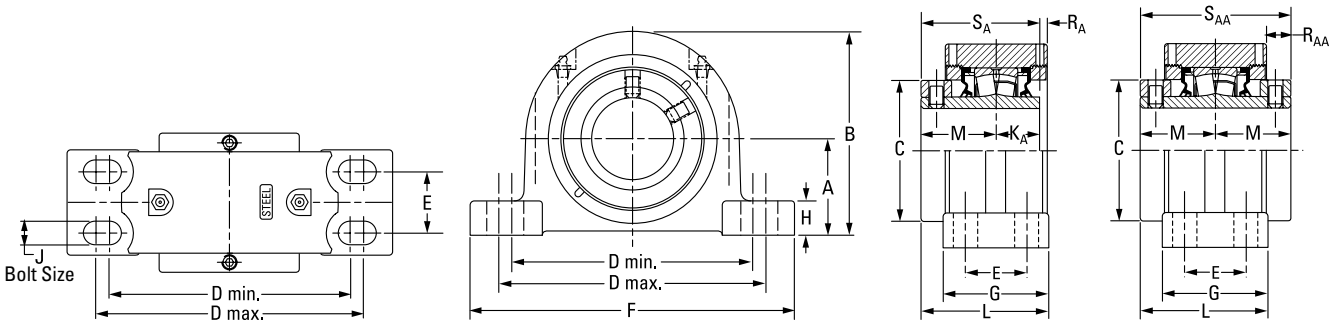

QA Single-Collar Unit **QAA Double-Collar Unit**

Bearing Part No.[1]	Shaft Dia.	Bearing No.	A	B	C	D min.	D max.	E	F	G	H	J	K_A	L	M	R_A	R_{AA}	S_A	S_{AA}	Wt.
	mm in.		**mm** in.	**mm** in.	**mm** in.	**mm** in.	**mm** in.	**mm** in.	**mm** in.	**mm** in.	**mm** in.	**mm** in.	**mm** in.	**mm** in.	**mm** in.	**mm** in.	**mm** in.	**mm** in.	**mm** in.	**kg** lbs.
QAPF10A115S QAAPF10A115S	1 15/16 in.	22210	**57.2** 2.25	**120.3** 4.74	**73.0** 2.88	**153.9** 6.06	**163.6** 6.44	**40.4** 1.59	**203.2** 8.00	**76.2** 3.00	**24.9** 0.98	**12** 1/2	**25.4** 1.00	**85.6** 3.37	**47.5** 1.87	**5.4** 0.21	**16.6** 0.66	**72.9** 2.87	**95.3** 3.75	**7.0** 15.5
QAPF10A200S QAAPF10A200S	2 in.																			
QAPF10A050S QAAPF10A050S	**50 mm**																			
QAPF11A203S QAAPF11A203S	2 3/16 in.	22211	**63.5** 2.50	**133.4** 5.25	**82.6** 3.25	**166.7** 6.56	**176.2** 6.94	**42.9** 1.69	**225.4** 8.88	**69.9** 2.75	**25.4** 1.00	**12** 1/2	**28.7** 1.13	**85.7** 3.37	**50.8** 2.00	**6.2** 0.25	**15.9** 0.62	**79.5** 3.13	**101.6** 4.00	**7.7** 17
QAPF11A204S QAAPF11A204S	2 1/4 in.																			
QAPF11A055S QAAPF11A055S	**55 mm**																			
QAPF13A060S QAAPF13A060S	**60 mm**	22213	**69.9** 2.75	**147.3** 5.80	**96.8** 3.81	**174.8** 6.88	**193.8** 7.63	**44.5** 1.75	**235.0** 9.25	**76.2** 3.00	**24.9** 0.98	**16** 5/8	**31.5** 1.24	**92.7** 3.65	**54.6** 2.15	**5.3** 0.21	**17.8** 0.70	**86.1** 3.39	**109.2** 4.30	**9.1** 20
QAPF13A207S QAAPF13A207S	2 7/16 in.																			
QAPF13A208S QAAPF13A208S	2 1/2 in.																			
QAPF13A065S QAAPF13A065S	**65 mm**																			
QAPF15A211S QAAPF15A211S	2 11/16 in.	22215	**82.6** 3.25	**167.6** 6.60	**109.0** 4.29	**193.0** 7.60	**231.1** 9.10	**47.8** 1.88	**265.2** 10.44	**79.5** 3.13	**32.8** 1.29	**16** 5/8	**31.8** 1.25	**100.1** 3.94	**60.2** 2.37	**6.1** 0.24	**22.4** 0.88	**91.9** 3.62	**120.4** 4.74	**12.2** 27
QAPF15A212S QAAPF15A212S	2 3/4 in.																			
QAPF15A070S QAAPF15A070S	**70 mm**																			
QAPF15A215S QAAPF15A215S	2 15/16 in.																			
QAPF15A300S QAAPF15A300S	3 in.																			
QAPF15A075S QAAPF15A075S	**75 mm**																			

[1]Bearing part numbers use QA to designate single-collar units (use S_A and R_A dimensions) and QAA to designate double-collar units (use S_{AA} and R_{AA} dimensions).

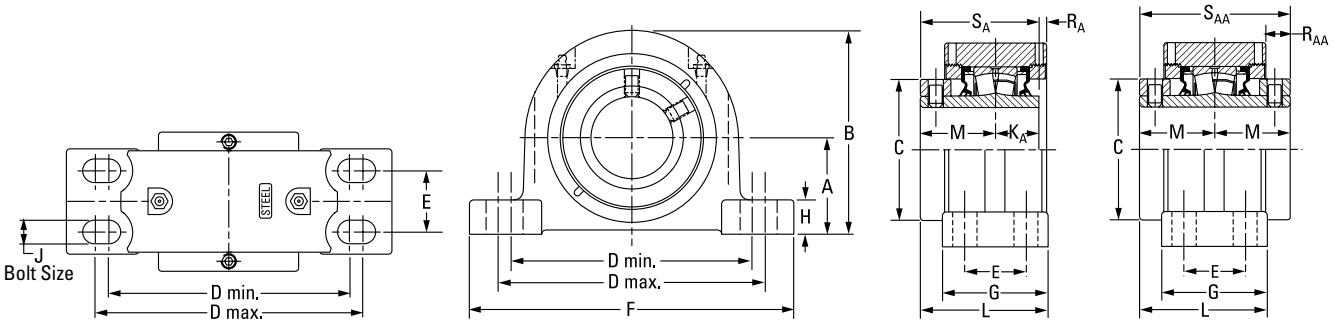

QA Single-Collar Unit **QAA Double-Collar Unit**

Bearing Part No.[1]	Shaft Dia.	Bearing No.	A	B	C	D min.	D max.	E	F	G	H	J	K_A	L	M	R_A	R_{AA}	S_A	S_{AA}	Wt.
	mm in.		**mm** in.	**mm** in.	**mm** in.	**mm** in.	**mm** in.	**mm** in.	**mm** in.	**mm** in.	**mm** in.	**mm** in.	**mm** in.	**mm** in.	**mm** in.	**mm** in.	**mm** in.	**mm** in.	**mm** in.	**kg** lbs.
QAPF18A303S QAAPF18A303S	3 3⁄16 in.	22218	**95.3** 3.75	**195.3** 7.69	**130.3** 5.13	**225.6** 8.88	**276.4** 10.88	**50.8** 2.00	**312.4** 12.30	**95.3** 3.75	**39.6** 1.56	**20** 3⁄4	**36.6** 1.44	**113.5** 4.47	**65.8** 2.59	**7.9** 0.31	**21.3** 0.84	**102.4** 4.03	**131.6** 5.18	**22.2** 49
QAPF18A304S QAAPF18A304S	3 1⁄4 in.																			
QAPF18A080S QAAPF18A080S	**80 mm**																			
QAPF18A085S QAAPF18A085S	**85 mm**																			
QAPF18A307S QAAPF18A307S	3 7⁄16 in.																			
QAPF18A308S QAAPF18A308S	3 1⁄2 in.																			
QAPF18A090S QAAPF18A090S	**90 mm**																			
QAPF20A315S QAAPF20A315S	3 15⁄16 in.	22220	**108.0** 4.25	**223.0** 8.78	**152.4** 6.00	**276.4** 10.88	**339.9** 13.38	**57.2** 2.25	**378.0** 14.88	**109.5** 4.31	**35.6** 1.40	**20** 3⁄4	**41.4** 1.63	**130.3** 5.13	**75.4** 2.97	**8.9** 0.35	**25.1** 0.99	**116.6** 4.59	**150.9** 5.94	**30.4** 67
QAPF20A400S QAAPF20A400S	4 in.																			
QAPF20A100S QAAPF20A100S	**100 mm**																			
QAAPF22A110S	**110 mm**	22222	**120.7** 4.75	**233.4** 9.19	**160.0** 6.30	**301.8** 11.88	**368.3** 14.50	**63.5** 2.50	**409.7** 16.13	**120.7** 4.75	**40.1** 1.58	**20** 3⁄4	–	**140.0** 5.51	**79.5** 3.13	–	**28.7** 1.13	–	**158.8** 6.25	**37.2** 82
QAAPF22A407S	4 7⁄16 in.																			
QAAPF22A408S	4 1⁄2 in.																			
QAAPF22A115S	**115 mm**																			
QAAPF26A125S	**125 mm**	22226	**139.7** 5.50	**279.7** 11.01	**175.0** 6.89	**349.3** 13.75	**403.4** 15.88	**69.9** 2.75	**444.5** 17.50	**128.0** 5.04	**39.1** 1.54	**24** 7⁄8	–	**158.5** 6.24	**94.5** 3.72	–	**36.8** 1.45	–	**189.0** 7.44	**60.8** 134
QAAPF26A415S	4 15⁄16 in.																			
QAAPF26A500S	5 in.																			
QAAPF26A130S	**130 mm**																			

[1]Bearing part numbers use QA to designate single-collar units (use S_A and R_A dimensions) and QAA to designate double-collar units (use S_{AA} and R_{AA} dimensions).

QAPR AND QAAPR FOUR-BOLT PILLOW BLOCKS

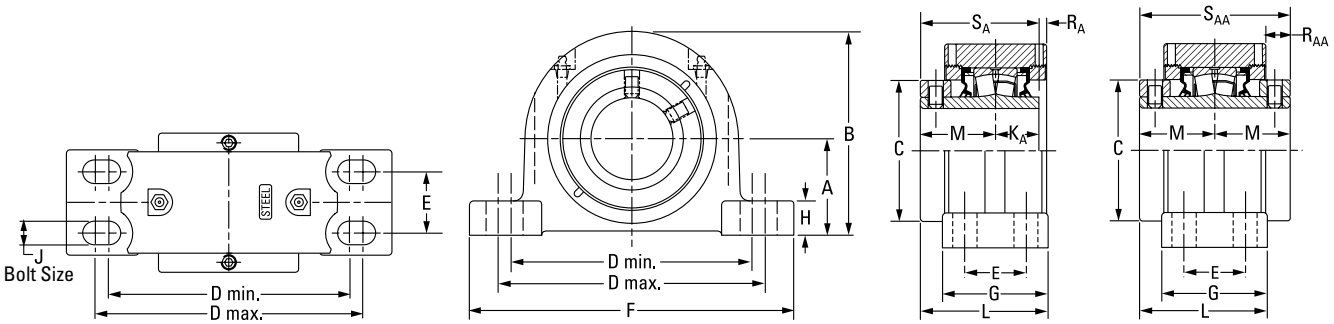

QA Single-Collar Unit **QAA Double-Collar Unit**

Bearing Part No.[1]	Shaft Dia.	Bearing No.	A	B	C	D min.	D max.	E	F	G	H	J	K_A	L	M	R_A	R_{AA}	S_A	S_{AA}	Wt.
	mm in.		**mm** in.	**mm** in.	**mm** in.	**mm** in.	**mm** in.	**mm** in.	**mm** in.	**mm** in.	**mm** in.	**mm** in.	**mm** in.	**mm** in.	**mm** in.	**mm** in.	**mm** in.	**mm** in.	**mm** in.	**kg** lbs.
QAPR13A060S QAAPR13A060S	**60 mm**	22213	**69.9** 2.75	**147.3** 5.80	**96.8** 3.81	**181.1** 7.13	**222.3** 8.75	**47.8** 1.88	**260.4** 10.25	**82.6** 3.25	**24.9** 0.98	**16** 5/8	**31.5** 1.24	**95.8** 3.77	**54.6** 2.15	**5.3** 0.21	**17.8** 0.70	**86.1** 3.39	**109.2** 4.30	**9.1** 20
QAPR13A207S QAAPR13A207S	2 7/16 in.																			
QAPR13A208S QAAPR13A208S	2 1/2 in.																			
QAPR13A065S QAAPR13A065S	**65 mm**																			
QAPR15A211S QAAPR15A211S	2 11/16 in.	22215	**79.5** 3.13	**164.3** 6.47	**109.0** 4.29	**203.2** 8.00	**243.8** 9.60	**54.1** 2.13	**275.1** 10.83	**85.9** 3.38	**29.5** 1.16	**16** 5/8	**31.8** 1.25	**102.1** 4.02	**60.2** 2.37	**6.1** 0.24	**22.4** 0.88	**91.9** 3.62	**120.4** 4.74	**12.2** 27
QAPR15A212S QAAPR15A212S	2 3/4 in.																			
QAPR15A070S QAAPR15A070S	**70 mm**																			
QAPR15A215S QAAPR15A215S	2 15/16 in.																			
QAPR15A300S QAAPR15A300S	3 in.																			
QAPR15A075S QAAPR15A075S	**75 mm**																			
QAPR18A303S QAAPR18A303S	3 3/16 in.	22218	**95.3** 3.75	**195.3** 7.69	**130.3** 5.13	**235.0** 9.25	**285.8** 11.25	**60.5** 2.38	**346.2** 13.63	**95.3** 3.75	**39.6** 1.56	**20** 3/4	**36.6** 1.44	**113.5** 4.47	**65.8** 2.59	**7.9** 0.31	**21.3** 0.84	**102.4** 4.03	**131.6** 5.18	**22.2** 49
QAPR18A304S QAAPR18A304S	3 1/4 in.																			
QAPR18A080S QAAPR18A080S	**80 mm**																			
QAPR18A085S QAAPR18A085S	**85 mm**																			
QAPR18A307S QAAPR18A307S	3 7/16 in.																			
QAPR18A308S QAAPR18A308S	3 1/2 in.																			
QAPR18A090S QAAPR18A090S	**90 mm**																			

[1]Bearing part numbers use QA to designate single-collar units (use S_A and R_A dimensions) and QAA to designate double-collar units (use S_{AA} and R_{AA} dimensions).

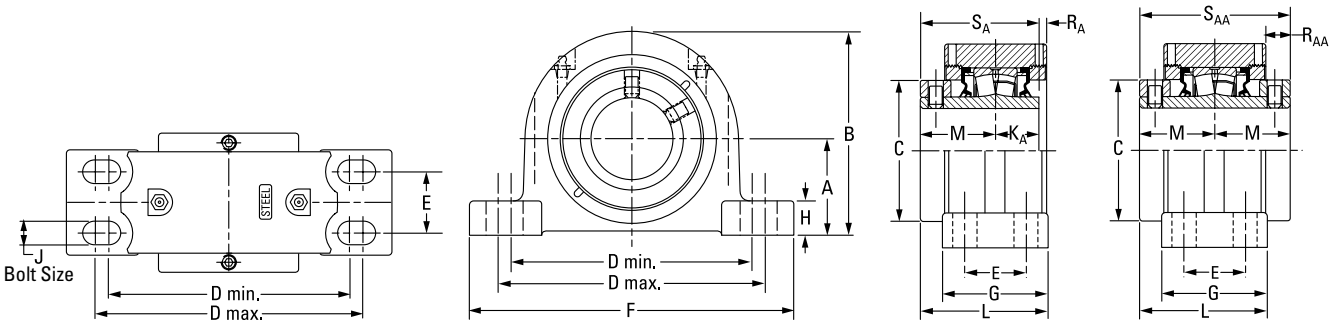

QA Single-Collar Unit **QAA Double-Collar Unit**

Bearing Part No.[1]	Shaft Dia.	Bearing No.	A	B	C	D min.	D max.	E	F	G	H	J	K_A	L	M	R_A	R_{AA}	S_A	S_{AA}	Wt.
	mm in.		**mm** in.	**mm** in.	**mm** in.	**mm** in.	**mm** in.	**mm** in.	**mm** in.	**mm** in.	**mm** in.	**mm** in.	**mm** in.	**mm** in.	**mm** in.	**mm** in.	**mm** in.	**mm** in.	**mm** in.	**kg** lbs.
QAPR20A311S QAAPR20A311S	3 11/16 in.	22220	**108.0** 4.25	**223.0** 8.78	**152.4** 6.00	**276.4** 10.88	**339.9** 13.38	**57.2** 2.25	**378.0** 14.88	**109.5** 4.31	**35.6** 1.40	**20** 3/4	**41.4** 1.63	**130.3** 5.13	**75.4** 2.97	**9.1** 0.36	**25.1** 0.99	**116.7** 4.59	**150.9** 5.94	**30.4** 67
QAPR20A312S QAAPR20A312S	3 3/4 in.																			
QAPR20A315S QAAPR20A315S	3 15/16 in.																			
QAPR20A400S QAAPR20A400S	4 in.																			
QAPR20A100S QAAPR20A100S	**100 mm**																			
QAAPR22A110S	**110 mm**	22222	**120.7** 4.75	**233.4** 9.19	**155.6** 6.13	**301.8** 11.88	**368.3** 14.50	**63.5** 2.50	**409.7** 16.13	**120.7** 4.75	**40.1** 1.58	**20** 3/4	–	**139.7** 5.50	**79.5** 3.13	–	**28.6** 1.13	–	**158.8** 6.25	**37.2** 82
QAAPR22A407S	4 7/16 in.																			
QAAPR22A408S	4 1/2 in.																			
QAAPR22A115S	**115 mm**																			
QAAPR26A125S	**125 mm**	22226	**139.7** 5.50	**279.7** 11.01	**174.6** 6.88	**330.2** 13.00	**403.4** 15.88	**71.4** 2.81	**444.5** 17.50	**128.0** 5.04	**39.1** 1.54	**24** 7/8	–	**158.5** 6.24	**94.5** 3.72	–	**36.8** 1.45	–	**189.0** 7.44	**60.8** 134
QAAPR26A415S	4 15/16 in.																			
QAAPR26A500S	5 in.																			
QAAPR26A130S	**130 mm**																			

[1]Bearing part numbers use QA to designate single-collar units (use S_A and R_A dimensions) and QAA to designate double-collar units (use S_{AA} and R_{AA} dimensions).

QAAPX 5000 SERIES FOUR-BOLT PILLOW BLOCKS

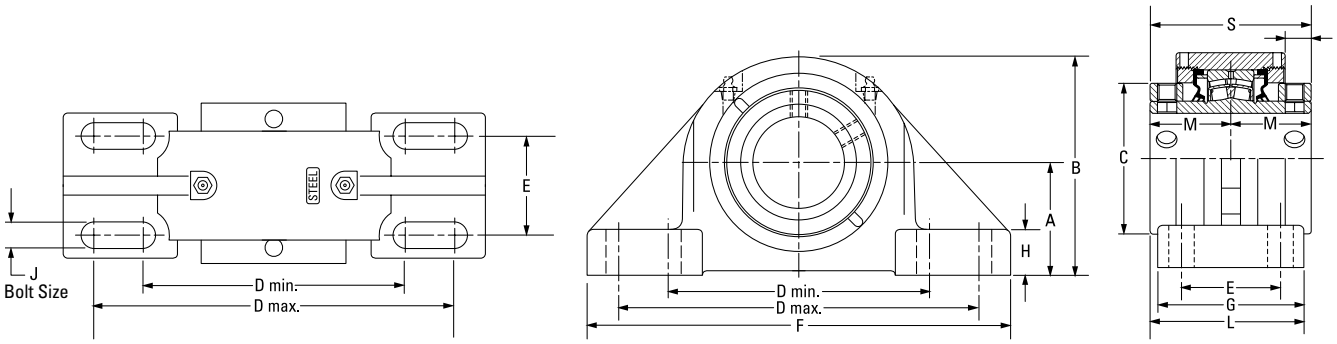

Bearing Part No.[1]	Shaft Dia.	Bearing No.	A	B	C	D min.	D max.	E	F	G	H	J	L	M	R	S	Wt.
	mm in.		**mm** in.	**mm** in.	**mm** in.	**mm** in.	**mm** in.	**mm** in.	**mm** in.	**mm** in.	**mm** in.	**mm** in.	**mm** in.	**mm** in.	**mm** in.	**mm** in.	**kg** lbs.
QAAPX13A060S	**60 mm**	22213	**76.2** 3.00	**153.7** 6.05	**96.8** 3.81	**176.3** 6.94	**242.8** 9.56	**66.8** 2.63	**285.8** 11.25	**98.6** 3.88	**31.0** 1.22	**16** ⅝	**103.9** 4.09	**54.6** 2.15	**17.8** 0.70	**109.2** 4.30	**13.2** 29
QAAPX13A207S	2 7⁄16 in.																
QAAPX13A208S	2 ½ in.																
QAAPX13A065S	**65 mm**																
QAAPX15A211S	2 11⁄16 in.	22215	**88.9** 3.50	**173.5** 6.83	**109.0** 4.29	**230.1** 9.06	**265.2** 10.44	**69.9** 2.75	**330.2** 13.00	**108.0** 4.25	**39.1** 1.54	**20** ¾	**114.3** 4.50	**60.2** 2.37	**21.3** 0.84	**120.4** 4.74	**20.4** 45
QAAPX15A212S	2 ¾ in.																
QAAPX15A070S	**70 mm**																
QAAPX15A215S	2 15⁄16 in.																
QAAPX15A300S	3 in.																
QAAPX15A075S	**75 mm**																
QAAPX18A303S	3 3⁄16 in.	22218	**101.6** 4.00	**201.2** 7.92	**130.3** 5.13	**274.6** 10.81	**309.6** 12.19	**76.2** 3.00	**381.0** 15.00	**120.7** 4.75	**38.1** 1.50	**20** ¾	**126.2** 4.97	**65.8** 2.59	**21.3** 0.84	**131.6** 5.18	**29.0** 64
QAAPX18A304S	3 ¼ in.																
QAAPX18A080S	**80 mm**																
QAAPX18A085S	**85 mm**																
QAAPX18A307S	3 7⁄16 in.																
QAAPX18A308S	3 ½ in.																
QAAPX18A090S	**90 mm**																
QAAPX20A315S	3 15⁄16 in.	22220	**127.0** 5.00	**239.8** 9.44	**152.4** 6.00	**317.5** 12.50	**355.6** 14.00	**88.9** 3.50	**425.5** 16.75	**139.7** 5.50	**41.4** 1.63	**24** ⅞	**145.0** 5.71	**75.2** 2.96	**25.4** 1.00	**150.4** 5.92	**44.9** 99
QAAPX20A400S	4 in.																
QAAPX20A100S	**100 mm**																
QAAPX22A110S	**110 mm**	22222	**146.1** 5.75	**273.8** 10.78	**159.8** 6.29	**354.1** 13.94	**395.2** 15.56	**101.6** 4.00	**469.9** 18.50	**158.8** 6.25	**45.7** 1.80	**24** 1	**158.8** 6.25	**79.5** 3.13	**28.7** 1.13	**158.8** 6.25	**63.0** 139
QAAPX22A407S	4 7⁄16 in.																
QAAPX22A408S	4 ½ in.																
QAAPX22A115S	**115 mm**																
QAAPX26A125S	**125 mm**	22226	**155.7** 6.13	**283.2** 11.15	**174.8** 6.88	**387.4** 15.25	**425.5** 16.75	**108.0** 4.25	**514.4** 20.25	**171.5** 6.75	**50.8** 2.00	**24.0** 1 ⅛	**180.3** 7.10	**94.5** 3.72	**37.3** 1.47	**189.0** 7.44	**67.6** 149
QAAPX26A415S	4 15⁄16 in.																
QAAPX26A500S	5 in.																
QAAPX26A130S	**130 mm**																

[1]Bearing part numbers use QA to designate single-collar units (use S_A and R_A dimensions) and QAA to designate double-collar units (use S_{AA} and R_{AA} dimensions).

QAC AND QAAC PILOTED FLANGE CARTRIDGES

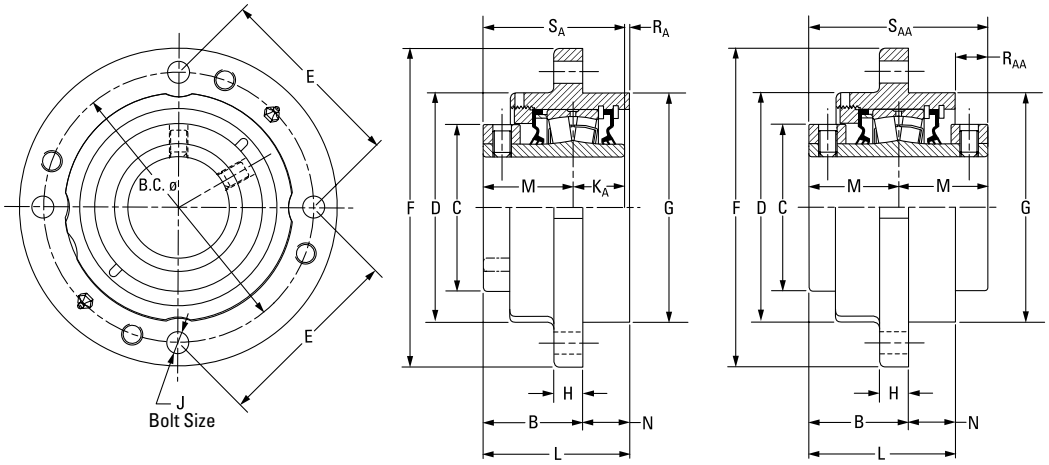

Bearing Part No.[1]	Shaft Dia.	Bearing No.	B FIX	B EXP	B.C.	C	D	E	F	G[2]	H	J	K_A	L FIX	L EXP	M	N	R_A	R_{AA}	S_A	S_{AA}	Wt.
	mm in.		**mm** in.	**mm** in.	**mm** in.	**mm** in.	**mm** in.	**mm** in.	**mm** in.	**mm** in.	**mm** in.	**mm** in.	**mm** in.	**mm** in.	**mm** in.	**mm** in.	**mm** in.	**mm** in.	**mm** in.	**mm** in.	**mm** in.	**kg** lbs.
QAC08A035S	**35 mm**	22208	**49.8** 1.96	**51.8** 2.04	**111.3** 4.38	**60.5** 2.38	**92.2** 3.63	**78.5** 3.09	**133.4** 5.25	**92.1** 3.625	**12.7** 0.50	**10** 7/16	**25.4** 1.00	**73.7** 2.90	**75.7** 2.98	**44.5** 1.75	**23.9** 0.94	**3.8** 0.15	–	**69.9** 2.75	–	**3.6** 8
QAC08A107S	1 7/16 in.																					
QAC08A108S	1 ½ in.																					
QAC09A040S	**40 mm**	22209	**54.6** 2.15	**56.6** 2.23	**130.3** 5.13	**66.8** 2.63	**111.3** 4.38	**91.9** 3.62	**155.7** 6.13	**108.0** 4.250	**12.7** 0.50	**10** 7/16	**25.4** 1.00	**77.0** 3.03	**78.2** 3.08	**47.8** 1.88	**22.4** 0.88	**3.8** 0.15	–	**73.2** 2.88	–	**4.1** 9
QAC09A111S	1 11/16 in.																					
QAC09A112S	1 ¾ in.																					
QAC09A045S	**45 mm**																					
QAC10A115S QAAC10A115S	1 15/16 in.	22210	**50.5** 1.99	**52.6** 2.07	**136.7** 5.38	**73.2** 2.88	**113.5** 4.47	**96.5** 3.80	**162.1** 6.38	**114.3** 4.500	**16.0** 0.63	**10** 7/16	**25.4** 1.00	**77.5** 3.05	**79.5** 3.13	**47.5** 1.87	**26.9** 1.06	**4.6** 0.18	**18.5** 0.73	**72.9** 2.87	**95.3** 3.75	**4.5** 10
QAC10A200S QAAC10A200S	2 in.																					
QAC10A050S QAAC10A050S	**50 mm**																					
QAC11A203S QAAC11A203S	2 3/16 in.	22211	**54.4** 2.14	**56.4** 2.22	**152.4** 6.00	**82.6** 3.25	**127.0** 5.00	**107.7** 4.24	**185.4** 7.30	**127.0** 5.000	**14.7** 0.58	**12** 1/2	**28.7** 1.13	**83.1** 3.27	**85.1** 3.35	**50.8** 2.00	**28.7** 1.13	**3.6** 0.14	**18.5** 0.73	**79.5** 3.13	**101.6** 4.00	**5.9** 13
QAC11A204S QAAC11A204S	2 ¼ in.																					
QAC11A055S QAAC11A055S	**55 mm**																					
QAC13A060S QAAC13A060S	**60 mm**	22213	**60.5** 2.38	**62.5** 2.46	**165.1** 6.50	**96.8** 3.81	**139.7** 5.50	**116.8** 4.60	**193.8** 7.63	**139.7** 5.500	**17.5** 0.69	**12** 1/2	**31.5** 1.24	**88.9** 3.50	**90.9** 3.58	**54.6** 2.15	**28.7** 1.13	**3.0** 0.12	**20.3** 0.80	**86.1** 3.39	**109.2** 4.30	**7.3** 16
QAC13A207S QAAC13A207S	2 7/16 in.																					
QAC13A208S QAAC13A208S	2 ½ in.																					
QAC13A065S QAAC13A065S	**65 mm**																					

[1] Bearing part numbers use QA to designate single-collar units (use S_A and R_A dimensions) and QAA to designate double-collar units (use S_{AA} and R_{AA} dimensions).
[2] Pilot tolerance: +0/-0.051 mm (+0/-0.002 in.).
[3] Six-bolt housing.

Continued on next page.

QAC AND QAAC PILOTED FLANGE CARTRIDGES – *continued*

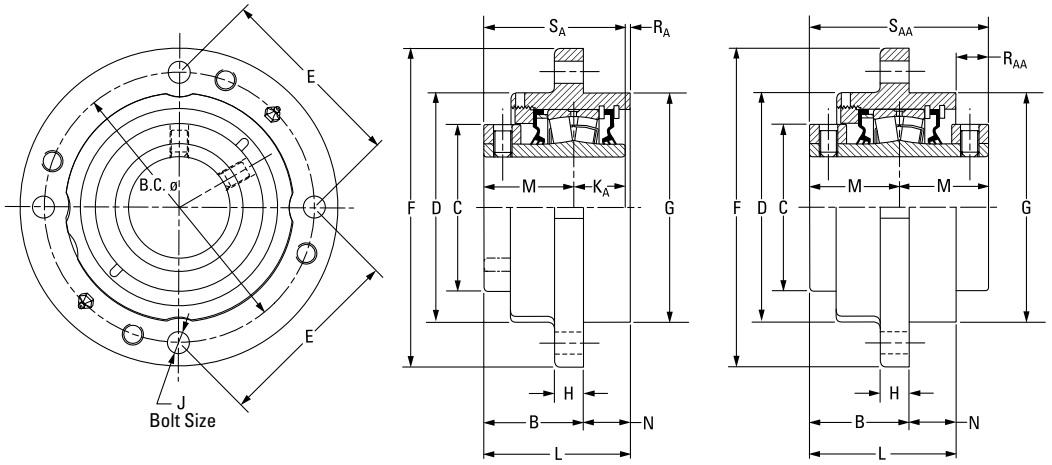

Continued from previous page.

Bearing Part No.[1]	Shaft Dia.	Bearing No.	B FIX	B EXP	B.C.	C	D	E	F	G[2]	H	J	K_A	L FIX	L EXP	M	N	R_A	R_{AA}	S_A	S_{AA}	Wt.
	mm in.		**mm** in.	**mm** in.	**mm** in.	**mm** in.	**mm** in.	**mm** in.	**mm** in.	**mm** in.	**mm** in.	**mm** in.	**mm** in.	**mm** in.	**mm** in.	**mm** in.	**mm** in.	**mm** in.	**mm** in.	**mm** in.	**mm** in.	**mm** in.	**kg** lbs.
QAC15A211S QAAC15A211S	2 11/16 in.	22215																				
QAC15A212S QAAC15A212S	2 3/4 in.																					
QAC15A070S QAAC15A070S	**70 mm**		**62.5** 2.46	**64.5** 2.54	**190.5** 7.50	**109.0** 4.29	**162.1** 6.38	**134.6** 5.30	**222.3** 8.75	**161.9** 6.375	**20.6** 0.81	**16** 5/8	**31.8** 1.25	**94.2** 3.71	**96.3** 3.79	**60.2** 2.37	**31.8** 1.25	**2.3** 0.09	**21.6** 0.85	**91.9** 3.62	**120.4** 4.74	**10.0** 22
QAC15A215S QAAC15A215S	2 15/16 in.																					
QAC15A300S QAAC15A300S	3 in.																					
QAC15A075S QAAC15A075S	**75 mm**																					
QAC18A303S QAAC18A303S	3 3/16 in.	22218																				
QAC18A304S QAAC18A304S	3 1/4 in.																					
QAC18A080S QAAC18A080S	**80 mm**		**73.2** 2.88	**75.2** 2.96	**219.2** 8.63	**130.3** 5.13	**187.5** 7.38	**154.9** 6.10	**262.6** 10.34	**187.3** 7.375	**25.4** 1.00	**20** 3/4	**36.6** 1.44	**106.4** 4.19	**108.5** 4.27	**65.8** 2.59	**33.3** 1.31	**4.1** 0.16	**25.1** 0.99	**102.4** 4.03	**131.6** 5.18	**14.5** 32
QAC18A085S QAAC18A085S	**85 mm**																					
QAC18A307S QAAC18A307S	3 7/16 in.																					
QAC18A308S QAAC18A308S	3 1/2 in.																					
QAC18A090S QAAC18A090S	**90 mm**																					
QAC20A315S QAAC20A315S	3 15/16 in.	22220																				
QAC20A400S QAAC20A400S	4 in.		**72.1** 2.84	**74.2** 2.92	**238.3** 9.38	**152.4** 6.00	**206.5** 8.13	**168.4** 6.63	**276.4** 10.88	**206.4** 8.125	**25.4** 1.00	**20** 3/4	**41.4** 1.63	**126.0** 4.96	**128.0** 5.04	**75.4** 2.97	**54.1** 2.13	**9.4** 0.37	**24.9** 0.98	**116.6** 4.59	**150.9** 5.94	**19.5** 43
QAC20A100S QAAC20A100S	**100 mm**																					
QAAC22A110S	**110 mm**	22222																				
QAAC22A407S[3]	4 7/16 in.		**78.0** 3.07	**80.0** 3.15	**298.5** 11.75[3]	**160.0** 6.30	**254.0** 10.00	**149.4** 5.88[3]	**342.9** 13.50	**260.4** 10.250	**25.4** 1.00	**20** 3/4[3]	–	**126.2** 4.97	**128.3** 5.05	**79.5** 3.13	**48.3** 1.90	–	**32.8** 1.29	–	**158.8** 6.25	**32.7** 72
QAAC22A408S[3]	4 1/2 in.																					
QAAC22A115S[3]	**115 mm**																					

[1]Bearing part numbers use QA to designate single-collar units (use S_A and R_A dimensions) and QAA to designate double-collar units (use S_{AA} and R_{AA} dimensions).
[2]Pilot tolerance: +0/-0.051 mm (+0/-0.002 in.).
[3]Six-bolt housing.

QACMD AND QAACMD PILOTED FLANGE CARTRIDGES

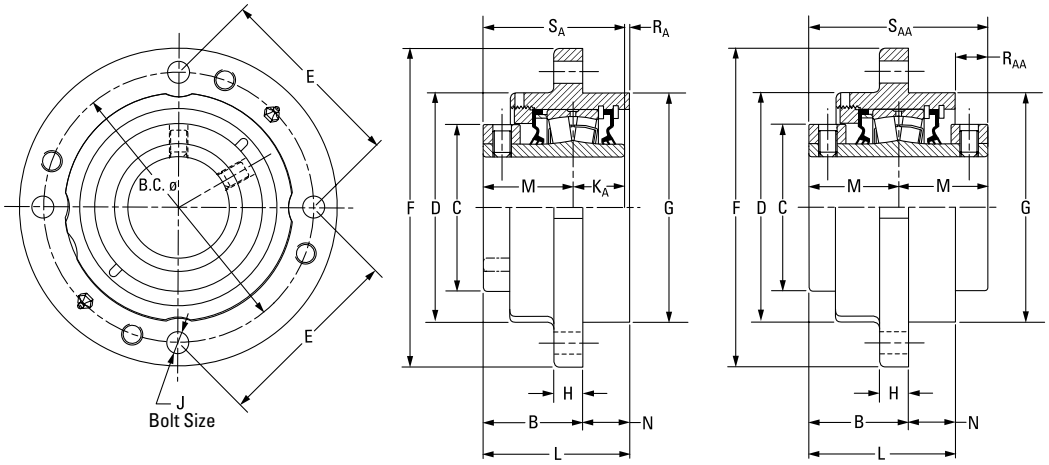

Bearing Part No.[1]	Shaft Dia.	Bearing No.	B FIX	B EXP	B.C.	C	D	E	F	G[2]	H	J	K_A	L FIX	L EXP	M	N	R_A	R_{AA}	S_A	S_{AA}	Wt.
	mm in.		**mm** in.	**mm** in.	**mm** in.	**mm** in.	**mm** in.	**mm** in.	**mm** in.	**mm** in.	**mm** in.	**mm** in.	**mm** in.	**mm** in.	**mm** in.	**mm** in.	**mm** in.	**mm** in.	**mm** in.	**mm** in.	**mm** in.	**kg** lbs.
QACMD08A035S	**35 mm**	22208	**49.8** 1.96	**51.8** 2.04	**111.3** 4.38	**60.5** 2.38	**92.2** 3.63	**78.5** 3.09	**133.4** 5.25	**92.1** 3.625	**12.7** 0.50	**10** 7/16	**25.4** 1.00	**73.7** 2.70	**75.7** 1.73	**44.5** 0.92	**23.9** 0.92	**4.06** 0.14	–	**69.9** 2.73	–	**3.6** 6
QACMD08A107S	1 7/16 in.																					
QACMD08A108S	1 ½ in.																					
QACMD09A040S	**40 mm**	22209	**54.6** 2.15	**56.6** 2.23	**130.3** 5.13	**65.0** 2.56	**111.3** 4.38	**91.9** 3.62	**155.7** 6.13	**108.0** 4.250	**12.7** 0.50	**12** 1/2	**25.4** 1.00	**77.0** 3.03	**79.0** 3.11	**47.5** 1.87	**22.4** 0.88	**4.1** 0.16	–	**73.2** 2.88	–	**4.1** 9
QACMD09A111S	1 11/16 in.																					
QACMD09A112S	1 ¾ in.																					
QACMD09A045S	**45 mm**																					
QACMD10A115S QAACMD10A115S	1 15/16 in.	22210	**50.1** 1.97	**52.6** 2.07	**136.7** 5.38	**70.3** 2.77	**113.5** 4.47	**96.5** 3.80	**162.1** 6.38	**114.3** 4.500	**16.0** 0.63	**12** 1/2	**25.4** 1.00	**77.5** 3.05	**79.5** 3.13	**47.5** 1.87	**26.9** 1.06	**4.6** 0.18	**18.5** 0.73	**72.9** 2.87	**95.3** 3.75	**4.5** 10
QACMD10A200S QAACMD10A200S	2 in.																					
QACMD10A050S QAACMD10A050S	**50 mm**																					
QACMD11A203S QAACMD11A203S	2 3/16 in.	22211	**54.0** 2.13	**56.4** 2.22	**152.4** 6.00	**79.3** 3.12	**127.0** 5.00	**107.7** 4.24	**185.4** 7.30	**127.0** 5.000	**14.7** 0.58	**12** 1/2	**28.7** 1.13	**82.7** 3.26	**85.1** 3.35	**50.5** 1.99	**28.7** 1.13	**3.5** 0.14	**18.5** 0.73	**79.2** 3.12	**101.6** 4.00	**5.9** 13
QACMD11A204S QAACMD11A204S	2 ¼ in.																					
QACMD11A055S QAACMD11A055S	**55 mm**																					
QACMD13A060S QAACMD13A060S	**60 mm**	22213	**60.5** 2.38	**61.5** 2.42	**165.1** 6.50	**96.8** 3.81	**139.7** 5.50	**116.8** 4.60	**193.8** 7.63	**139.7** 5.500	**17.5** 0.69	**12** 1/2	**31.5** 1.24	**88.9** 3.50	**91.2** 3.59	**54.1** 2.13	**28.7** 1.13	**2.3** 0.09	**20.3** 0.80	**85.6** 3.37	**109.2** 4.30	**7.3** 16
QACMD13A207S QAACMD13A207S	2 7/16 in.																					
QACMD13A208S QAACMD13A208S	2 ½ in.																					
QACMD13A065S QAACMD13A065S	**65 mm**																					

[1] Bearing part numbers use QA to designate single-collar units (use S_A and R_A dimensions) and QAA to designate double-collar units (use S_{AA} and R_{AA} dimensions).
[2] Pilot tolerance: +0/-0.051 mm (+0/-0.002 in.).
[3] Six-bolt housing.

Continued on next page.

QACMD AND QAACMD PILOTED FLANGE CARTRIDGES – *continued*

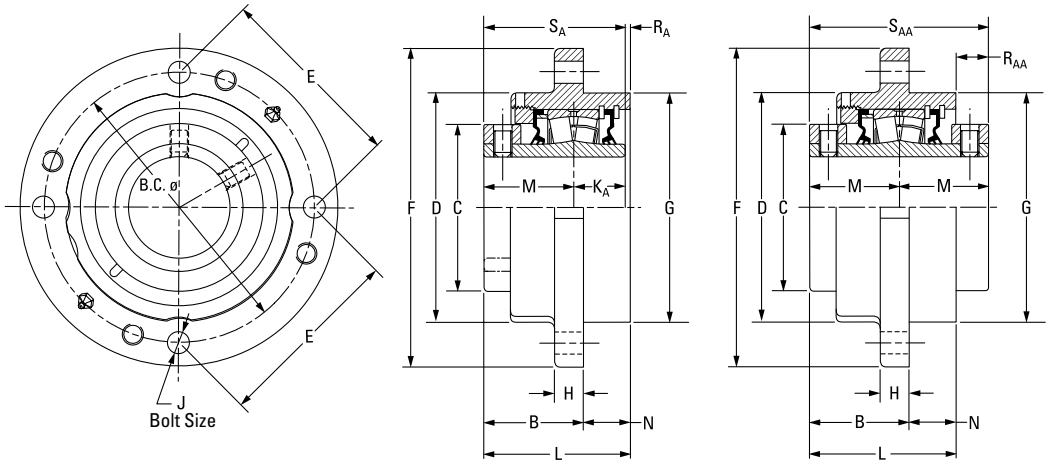

Continued from previous page.

Bearing Part No.[1]	Shaft Dia.	Bearing No.	B FIX	B EXP	B.C.	C	D	E	F	G[2]	H	J	K_A	L FIX	L EXP	M	N	R_A	R_{AA}	S_A	S_{AA}	Wt.
	mm in.		**mm** in.	**mm** in.	**mm** in.	**mm** in.	**mm** in.	**mm** in.	**mm** in.	**mm** in.	**mm** in.	**mm** in.	**mm** in.	**mm** in.	**mm** in.	**mm** in.	**mm** in.	**mm** in.	**mm** in.	**mm** in.	**mm** in.	**mm** in.	**kg** lbs.
QACMD15A211S QAACMD15A211S	2 11/16 in.	22215	**62.5** 2.46	**64.5** 2.54	**190.5** 7.50	**109.0** 4.29	**162.1** 6.38	**134.6** 5.30	**222.3** 8.75	**161.9** 6.375	**20.6** 0.81	**16** 5/8	**31.8** 1.25	**94.2** 3.71	**96.5** 3.80	**60.2** 2.37	**31.8** 1.25	**2.3** 0.09	**21.6** 0.85	**91.9** 3.62	**120.4** 4.74	**10.0** 22
QACMD15A212S QAACMD15A212S	2 3/4 in.																					
QACMD15A070S QAACMD15A070S	**70 mm**																					
QACMD15A215S QAACMD15A215S	2 15/16 in.																					
QACMD15A300S QAACMD15A300S	3 in.																					
QACMD15A075S QAACMD15A075S	**75 mm**																					
QACMD18A303S QAACMD18A303S	3 3/16 in.	22218	**73.2** 2.88	**75.2** 2.96	**219.2** 8.63	**120.9** 4.76	**187.5** 7.38	**154.9** 6.10	**262.6** 10.34	**187.3** 7.375	**25.4** 1.00	**20** 3/4	**36.6** 1.44	**106.4** 4.19	**108.5** 4.27	**65.8** 2.59	**33.3** 1.31	**4.3** 0.17	**25.1** 0.99	**102.1** 4.02	**131.6** 5.12	**14.5** 32
QACMD18A304S QAACMD18A304S	3 1/4 in.																					
QACMD18A080S QAACMD18A080S	**80 mm**																					
QACMD18A085S QAACMD18A085S	**85 mm**																					
QACMD18A307S QAACMD18A307S	3 7/16 in.																					
QACMD18A308S QAACMD18A308S	3 1/2 in.																					
QACMD18A090S QAACMD18A090S	**90 mm**																					

[1]Bearing part numbers use QA to designate single-collar units (use S_A and R_A dimensions) and QAA to designate double-collar units (use S_{AA} and R_{AA} dimensions).
[2]Pilot tolerance: +0/-0.051 mm (+0/-0.002 in.).
[3]Six-bolt housing.

QACW AND QAACW PILOTED FLANGE CARTRIDGES

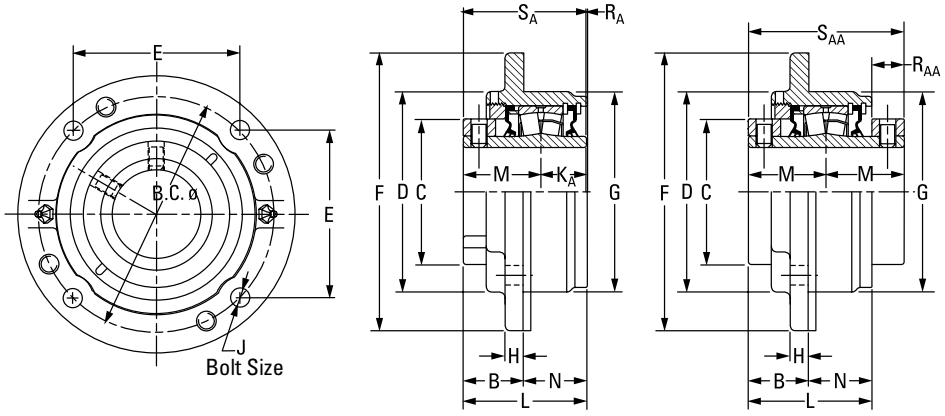

QA Single-Collar Unit **QAA Double-Collar Unit**

Bearing Part No.[1]	Shaft Dia.	Bearing No.	B FIX	B EXP	B.C.	C	D	E	F	G[2]	H	J	K_A	L FIX	L EXP	M	N	R_A	R_{AA}	S_A	S_{AA}	Wt.
	mm in.		**mm** in.	**mm** in.	**mm** in.	**mm** in.	**mm** in.	**mm** in.	**mm** in.	**mm** in.	**mm** in.	**mm** in.	**mm** in.	**mm** in.	**mm** in.	**mm** in.	**mm** in.	**mm** in.	**mm** in.	**mm** in.	**mm** in.	**kg** lbs.
QACW08A035S	**35 mm**	22208	**38.9** 1.53	**40.9** 1.61	**111.3** 4.38	**60.5** 2.38	**92.2** 3.63	**78.5** 3.09	**133.4** 5.25	**92.1** 3.625	**12.7** 0.50	**10** 7/16	**25.4** 1.00	**73.7** 2.90	**75.7** 2.98	**44.5** 1.75	**35.1** 1.38	**3.8** 0.15	–	**69.9** 2.75	–	**3.6** 8
QACW08A107S	1 7/16 in.																					
QACW08A108S	1 ½ in.																					
QACW09A040S	**40 mm**	22209	**38.9** 1.53	**40.1** 1.58	**130.3** 5.13	**66.8** 2.63	**111.3** 4.38	**91.9** 3.62	**155.7** 6.13	**108.0** 4.250	**10.2** 0.40	**10** 7/16	**25.4** 1.00	**77.0** 3.03	**78.2** 3.08	**47.8** 1.88	**38.1** 1.5	**4.1** 0.16	–	**73.2** 2.88	–	**4.1** 9
QACW09A111S	1 11/16 in.																					
QACW09A112S	1 ¾ in.																					
QACW09A045S	**45 mm**																					
QACW10A115S QAACW10A115S	1 15/16 in.	22210	**35.3** 1.39	**37.3** 1.47	**136.7** 5.38	**73.2** 2.88	**113.5** 4.47	**96.5** 3.80	**162.1** 6.38	**114.3** 4.500	**9.7** 0.38	**10** 7/16	**25.4** 1.00	**73.4** 2.89	**75.4** 2.97	**47.5** 1.87	**38.1** 1.50	**0.5** 0.02	**22.6** 0.89	**72.9** 2.87	**95.3** 3.75	**4.5** 10
QACW10A200S QAACW10A200S	2 in.																					
QACW10A050S QAACW10A050S	**50 mm**																					
QACW11A203S QAACW11A203S	2 3/16 in.	22211	**38.9** 1.53	**40.9** 1.61	**152.4** 6.00	**82.6** 3.25	**126.7** 4.99	**107.7** 4.24	**181.1** 7.13	**127.0** 5.000	**14.2** 0.56	**12** ½	**28.7** 1.13	**80.3** 3.16	**82.3** 3.24	**50.8** 2.00	**41.4** 1.63	**0.8** 0.03	**14.7** 0.58	**79.5** 3.13	**101.6** 4.00	**5.9** 13
QACW11A204S QAACW11A204S	2 ¼ in.																					
QACW11A055S QAACW11A055S	**55 mm**																					
QACW13A060S QAACW13A060S	**60 mm**	22213	**47.2** 1.86	**49.3** 1.94	**165.1** 6.50	**96.8** 3.81	**139.7** 5.50	**116.8** 4.60	**193.8** 7.63	**139.7** 5.500	**12.7** 0.50	**12** ½	**31.5** 1.24	**90.2** 3.55	**92.2** 3.63	**54.6** 2.15	**42.9** 1.69	**4.3** 0.17	**19.1** 0.75	**86.1** 3.39	**109.2** 4.30	**7.3** 16
QACW13A207S QAACW13A207S	2 7/16 in.																					
QACW13A208S QAACW13A208S	2 ½ in.																					
QACW13A065S QAACW13A065S	**65 mm**																					
QACW15A211S QAACW15A211S	2 11/16 in.	22215	**46.0** 1.81	**48.0** 1.89	**190.5** 7.50	**109.0** 4.29	**162.1** 6.38	**134.6** 5.30	**222.3** 8.75	**161.9** 6.375	**12.7** 0.50	**16** 5/8	**31.8** 1.25	**93.5** 3.68	**95.5** 3.76	**60.2** 2.37	**47.8** 1.88	**1.5** 0.06	**26.9** 1.06	**91.9** 3.62	**120.4** 4.74	**10.0** 22
QACW15A212S QAACW15A212S	2 ¾ in.																					
QACW15A070S QAACW15A070S	**70 mm**																					
QACW15A215S QAACW15A215S	2 15/16 in.																					
QACW15A300S QAACW15A300S	3 in.																					
QACW15A075S QAACW15A075S	**75 mm**																					

[1] Bearing part numbers use QA to designate single-collar units (use S_A and R_A dimensions) and QAA to designate double-collar units (use S_{AA} and R_{AA} dimensions).
[2] Pilot tolerance: +0/-0.051 mm (+0/-0.002 in.).
[3] Six-bolt housing.

Continued on next page.

QACW AND QAACW PILOTED FLANGE CARTRIDGES – *continued*

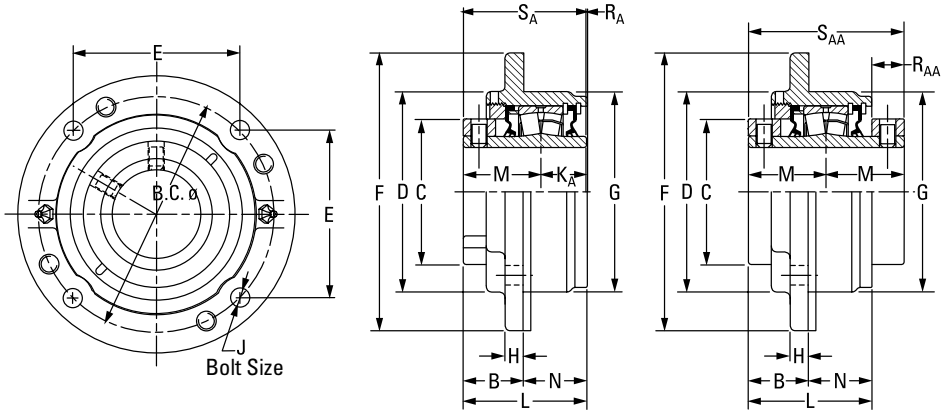

QA Single-Collar Unit **QAA Double-Collar Unit**

Continued from previous page.

Bearing Part No.[1]	Shaft Dia.	Bearing No.	B FIX	B EXP	B.C.	C	D	E	F	G[2]	H	J	K_A	L FIX	L EXP	M	N	R_A	R_{AA}	S_A	S_{AA}	Wt.
	mm in.		**mm** in.	**mm** in.	**mm** in.	**mm** in.	**mm** in.	**mm** in.	**mm** in.	**mm** in.	**mm** in.	**mm** in.	**mm** in.	**mm** in.	**mm** in.	**mm** in.	**mm** in.	**mm** in.	**mm** in.	**mm** in.	**mm** in.	**kg** lbs.
QACW18A303S QAACW18A303S	3 3⁄16 in.	22218	**58.2** 2.29	**60.2** 2.37	**219.2** 8.63	**130.3** 5.13	**187.5** 7.38	**154.9** 6.10	**260.4** 10.25	**187.3** 7.375	**22.4** 0.88	**20** 3⁄4	**36.6** 1.44	**105.9** 4.17	**108.0** 4.25	**65.8** 2.59	**47.8** 1.88	**3.3** 0.13	**21.3** 0.84	**102.4** 4.03	**131.6** 5.18	**14.5** 32
QACW18A304S QAACW18A304S	3 1⁄4 in.																					
QACW18A080S QAACW18A080S	**80 mm**																					
QACW18A085S QAACW18A085S	**85 mm**																					
QACW18A307S QAACW18A307S	3 7⁄16 in.																					
QACW18A308S QAACW18A308S	3 1⁄2 in.																					
QACW18A090S QAACW18A090S	**90 mm**																					
QACW20A315S QAACW20A315S	3 15⁄16 in.	22220	**65.5** 2.58	**67.6** 2.66	**238.3** 9.38	**152.4** 6.00	**206.5** 8.13	**168.4** 6.63	**276.4** 10.88	**206.4** 8.125	**25.4** 1.00	**20** 3⁄4	**41.4** 1.63	**123.4** 4.86	**125.5** 4.94	**75.4** 2.97	**57.9** 2.28	**6.9** 0.27	**30.2** 1.19	**116.6** 4.59	**150.9** 5.94	**19.5** 43
QACW20A400S QAACW20A400S	4 in.																					
QACW20A100S QAACW20A100S	**100 mm**																					
QAACW22A110S	**110 mm**	22222	**62.0** 2.44	**64.0** 2.52	**298.5** 11.75[3]	**160.0** 6.30	**254.0** 10.00	**149.4** 5.88[3]	**342.9** 13.50	**260.4** 10.250	**25.4** 1.00	**20** 3⁄4[3]	–	**130.0** 5.12	**132.1** 5.20	**79.5** 3.13	**68.3** 2.69	–	**28.7** 1.13	–	**158.8** 6.25	**32.7** 72
QAACW22A407S[3]	4 7⁄16 in.																					
QAACW22A408S[3]	4 1⁄2 in.																					
QAACW22A115S[3]	**115 mm**																					
QAACW26A125S[3]	**125 mm**	22226	**73.7** 2.90	**75.7** 2.98	**323.9** 12.75[3]	**175.0** 6.89	**266.7** 10.50	**162.1** 6.38[3]	**374.7** 14.75	**279.4** 11.000	**26.2** 1.03	**24** 7⁄8[3]	–	**153.2** 6.03	**155.2** 6.11	**94.5** 3.72	**78.0** 3.07	–	**35.8** 1.41	–	**189.0** 7.44	**46.3** 102
QAACW26A415S[3]	4 15⁄16 in.																					
QAACW26A500S[3]	5 in.																					
QAACW26A130S[3]	**130 mm**																					

[1]Bearing part numbers use QA to designate single-collar units (use S_A and R_A dimensions) and QAA to designate double-collar units (use S_{AA} and R_{AA} dimensions).
[2]Pilot tolerance: +0/-0.051 mm (+0/-0.002 in.).
[3]Six-bolt housing.

QAF AND QAAF SQUARE FLANGE BLOCKS

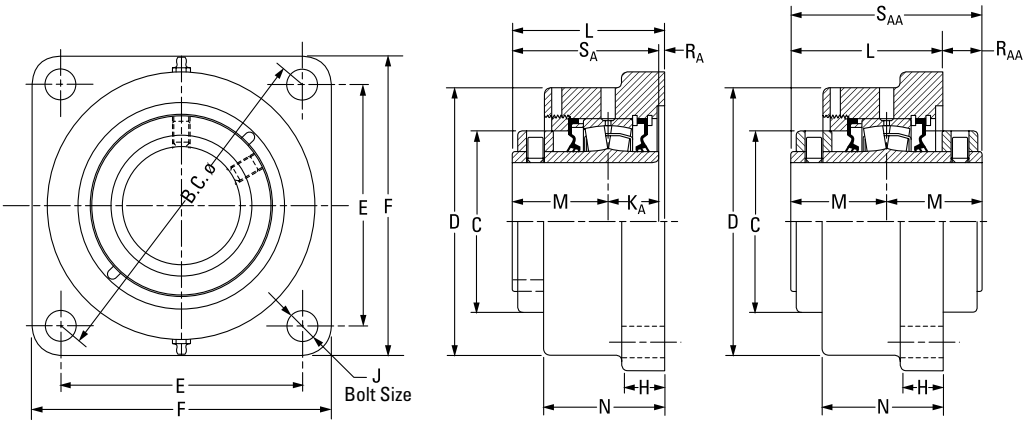

QA Single-Collar Unit **QAA Double-Collar Unit**

Bearing Part No.[1]	Shaft Dia.	Bearing No.	B.C.	C	D	E	F	H	J	K_A	L FIX	L EXP	M	N	R_A	R_{AA}	S_A	S_{AA}	Wt.
	mm in.		**mm** in.	**mm** in.	**mm** in.	**mm** in.	**mm** in.	**mm** in.	**mm** in.	**mm** in.	**mm** in.	**mm** in.	**mm** in.	**mm** in.	**mm** in.	**mm** in.	**mm** in.	**mm** in.	**kg** lbs.
QAF08A035S	**35 mm**	22208	**125.7** 4.95	**60.5** 2.38	**93.7** 3.69	**88.9** 3.50	**117.6** 4.63	**22.4** 0.88	**12** 1/2	**25.4** 1.00	**72.9** 2.87	**74.9** 2.95	**44.5** 1.75	**57.2** 2.25	**3.0** 0.12	–	**69.9** 2.75	–	**4.5** 10
QAF08A107S	1 7/16 in.																		
QAF08A108S	1 1/2 in.	22208	**148.3** 5.84	**60.5** 2.38	**108.0** 4.25	**104.9** 4.13	**136.7** 5.38	**22.4** 0.88	**12** 1/2	**25.4** 1.00	**73.7** 2.90	**75.7** 2.98	**44.5** 1.75	**59.4** 2.34	**3.8** 0.15	–	**69.9** 2.75	–	**4.5** 10
QAF09A040S	**40 mm**	22209	**148.3** 5.84	**66.8** 2.63	**118.4** 4.66	**104.9** 4.13	**136.7** 5.38	**22.4** 0.88	**12** 1/2	**25.4** 1.00	**79.5** 3.13	**81.5** 3.21	**47.8** 1.88	**63.5** 2.50	**6.4** 0.25	–	**73.2** 2.88	–	**5.0** 11
QAF09A111S	1 11/16 in.																		
QAF09A112S	1 3/4 in.	22209	**157.2** 6.19	**66.8** 2.63	**118.4** 4.66	**111.3** 4.38	**143.0** 5.63	**22.4** 0.88	**12** 1/2	**25.4** 1.00	**79.5** 3.13	**81.5** 3.21	**47.8** 1.88	**63.5** 2.50	**6.4** 0.25	–	**73.2** 2.88	–	**5.0** 11
QAF09A045S	**45 mm**																		
QAF10A115S QAAF10A115S	1 15/16 in.	22210	**157.2** 6.19	**73.2** 2.88	**120.7** 4.75	**111.3** 4.38	**139.7** 5.50	**22.4** 0.88	**12** 1/2	**25.4** 1.00	**80.8** 3.18	**82.8** 3.26	**47.5** 1.87	**65.0** 2.56	**7.9** 0.31	**15.2** 0.60	**72.9** 2.87	**95.3** 3.75	**5.0** 11
QAF10A200S QAAF10A200S	2 in.																		
QAF10A050S QAAF10A050S	**50 mm**																		
QAF11A203S QAAF11A203S	2 3/16 in.	22211	**175.0** 6.89	**82.6** 3.25	**130.3** 5.13	**124.0** 4.88	**157.2** 6.19	**25.4** 1.00	**16** 5/8	**28.7** 1.13	**83.1** 3.27	**85.1** 3.35	**50.8** 2.00	**66.8** 2.63	**3.8** 0.15	**18.5** 0.73	**79.5** 3.13	**101.6** 4.00	**6.4** 14
QAF11A204S QAAF11A204S	2 1/4 in.																		
QAF11A055S QAAF11A055S	**55 mm**																		
QAF13A060S QAAF13A060S	**60 mm**	22213	**193.0** 7.60	**96.8** 3.81	**146.1** 5.75	**136.7** 5.38	**168.4** 6.63	**25.4** 1.00	**16** 5/8	**31.5** 1.24	**89.2** 3.51	**91.2** 3.59	**54.6** 2.15	**72.4** 2.85	**3.0** 0.12	**20.1** 0.79	**86.1** 3.39	**109.2** 4.30	**7.7** 17
QAF13A207S QAAF13A207S	2 7/16 in.																		
QAF13A208S QAAF13A208S	2 1/2 in.																		
QAF13A065S QAAF13A065S	**65 mm**																		

[1] Bearing part numbers use QA to designate single-collar units (use S_A and R_A dimensions) and QAA to designate double-collar units (use S_{AA} and R_{AA} dimensions).

Continued on next page.

QAF AND QAAF SQUARE FLANGE BLOCKS – *continued*

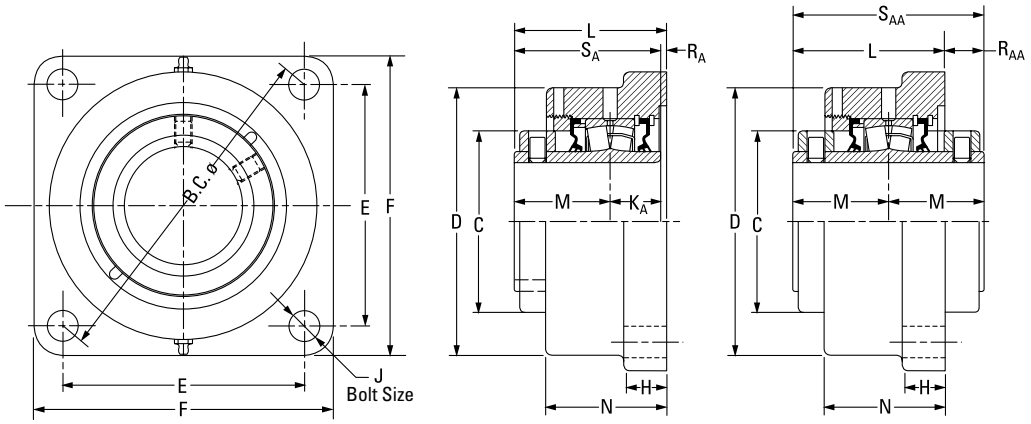

QA Single-Collar Unit **QAA Double-Collar Unit**

Continued from previous page.

Bearing Part No.[1]	Shaft Dia.	Bearing No.	B.C.	C	D	E	F	H	J	K_A	L FIX	L EXP	M	N	R_A	R_{AA}	S_A	S_{AA}	Wt.
	mm in.		**mm** in.	**mm** in.	**mm** in.	**mm** in.	**mm** in.	**mm** in.	**mm** in.	**mm** in.	**mm** in.	**mm** in.	**mm** in.	**mm** in.	**mm** in.	**mm** in.	**mm** in.	**mm** in.	**kg** lbs.
QAF15A211S QAAF15A211S	2 1⁄16 in.	22215	**215.4** 8.48	**109.0** 4.29	**168.9** 6.65	**152.4** 6.00	**189.0** 7.44	**26.9** 1.06	**20** 3⁄4	**31.8** 1.25	**95.8** 3.77	**97.8** 3.85	**60.2** 2.37	**76.2** 3.00	**3.8** 0.15	**24.6** 0.97	**91.9** 3.62	**120.4** 4.74	**10.4** 23
QAF15A212S QAAF15A212S	2 3⁄4 in.																		
QAF15A070S QAAF15A070S	**70 mm**																		
QAF15A215S QAAF15A215S	2 15⁄16 in.																		
QAF15A300S QAAF15A300S	3 in.																		
QAF15A075S QAAF15A075S	**75 mm**																		
QAF18A303S QAAF18A303S	3 3⁄16 in.	22218	**251.7** 9.91	**130.3** 5.13	**193.8** 7.63	**177.8** 7.00	**219.2** 8.63	**33.3** 1.31	**20** 3⁄4	**36.6** 1.44	**107.2** 4.22	**109.2** 4.30	**65.8** 2.59	**84.1** 3.31	**4.8** 0.19	**24.4** 0.96	**102.4** 4.03	**131.6** 5.18	**15.9** 35
QAF18A304S QAAF18A304S	3 1⁄4 in.																		
QAF18A080S QAAF18A080S	**80 mm**																		
QAF18A085S QAAF18A085S	**85 mm**																		
QAF18A307S QAAF18A307S	3 7⁄16 in.																		
QAF18A308S QAAF18A308S	3 1⁄2 in.																		
QAF18A090S QAAF18A090S	**90 mm**																		
QAF20A315S QAAF20A315S	3 15⁄16 in.	22220	**278.4** 10.96	**152.4** 6.00	**224.0** 8.82	**196.9** 7.75	**253.2** 9.97	**38.1** 1.50	**24** 7⁄8	**41.4** 1.63	**126.0** 4.96	**128.0** 5.04	**75.4** 2.97	**103.1** 4.06	**9.4** 0.37	**24.1** 0.95	**116.6** 4.59	**150.4** 5.92	**24.9** 55
QAF20A400S QAAF20A400S	4 in.																		
QAF20A100S QAAF20A100S	**100 mm**																		
QAAF22A110S	**110 mm**	22222	**314.5** 12.38	**155.70** 6.13	**256.8** 10.11	**222.3** 8.75	**276.4** 10.88	**38.1** 1.50	**24** 7⁄8	–	**135.6** 5.34	**137.7** 5.42	**79.5** 3.13	**106.9** 4.21	–	**23.4** 0.92	–	**158.8** 6.25	**28.6** 63
QAAF22A407S	4 7⁄16 in.																		
QAAF22A408S	4 1⁄2 in.																		
QAAF22A115S	**115 mm**																		

[1]Bearing part numbers use QA to designate single-collar units (use S_A and R_A dimensions) and QAA to designate double-collar units (use S_{AA} and R_{AA} dimensions).

QAFE AND QAAFE STAINLESS STEEL SQUARE FLANGE BLOCKS

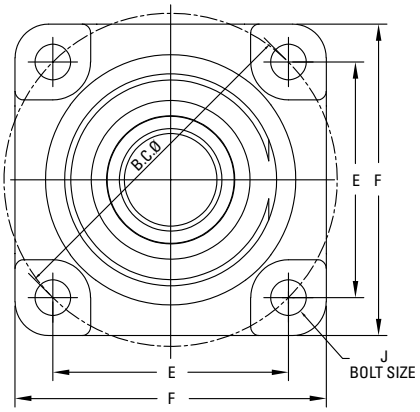

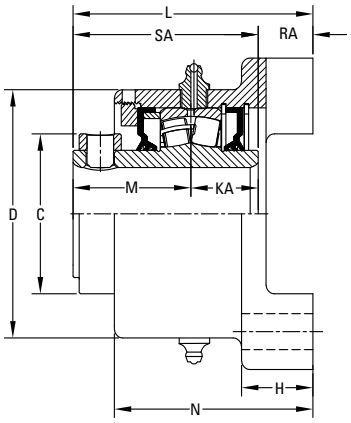

SINGLE LOCKING COLLAR

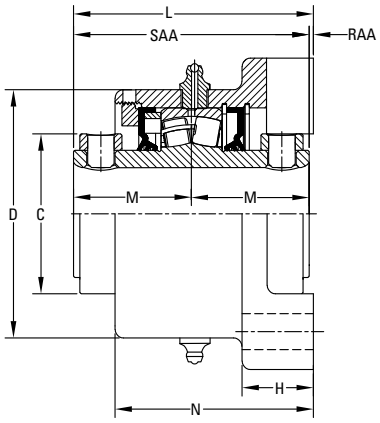

DOUBLE LOCKING COLLAR

Bearing Part No.[1]	Shaft Dia.	Bearing No.	B.C.	C	D	E	F	H	J	K_A	L FIX	L EXP	M	N	R_A	R_{AA}	S_A	S_{AA}	Wt.
	mm in.		**mm** in.	**mm** in.	**mm** in.	**mm** in.	**mm** in.	**mm** in.	**mm** in.	**mm** in.	**mm** in.	**mm** in.	**mm** in.	**mm** in.	**mm** in.	**mm** in.	**mm** in.	**mm** in.	**kg** lbs.
QAFE08A035S	**35 mm**	22208	**125.7** 4.95	**60.5** 2.38	**93.7** 3.69	**88.9** 3.50	**117.6** 4.63	**25.8** 1.06	**M12** 1/2	**25.4** 1.00	**90.5** 3.56	**93.1** 3.67	**44.5** 1.75	**74.9** 2.95	**20.7** 0.81	–	**69.9** 2.75	–	**2.8** 6
QAFE08A107S	1 7/16 in.																		
QAFE08A108S	1 1/2 in.	22208	**148.3** 5.84	**60.5** 2.38	**108.0** 4.25	**104.9** 4.13	**136.7** 5.38	**30.2** 1.19	**M12** 1/2	**25.4** 1.00	**90.5** 3.56	**94.6** 3.73	**44.5** 1.75	**76.4** 3.01	**20.7** 0.81	–	**69.9** 2.75	–	**4.5** 10
QAFE09A111S	1 11/16 in.	22209	**148.3** 5.84	**66.8** 2.63	**118.4** 4.66	**104.9** 4.13	**136.7** 5.38	**30.2** 1.19	**M12** 1/2	**25.4** 1.00	**96.3** 3.79	**101.9** 4.01	**47.8** 1.88	**80.5** 3.17	**23.3** 0.92	–	**73.2** 2.88	–	**5.0** 11
QAFE09A040S	**40 mm**																		
QAFE09A112S	1 3/4 in.	22209	**157.2** 6.19	**66.8** 2.63	**118.4** 4.66	**111.3** 4.38	**143.0** 5.63	**30.2** 1.19	**M12** 1/2	**25.4** 1.00	**96.3** 3.79	**101.9** 4.01	**47.8** 1.88	**80.5** 3.17	**23.3** 0.92	–	**73.2** 2.88	–	**5.3** 12
QAFE09A045S	**45 mm**																		
QAFE10A115S QAAFE10A115S	1 15/16 in.	22210	**157.2** 6.19	**73.2** 2.88	**120.7** 4.75	**111.3** 4.38	**139.7** 5.50	**30.2** 1.19	**M12** 1/2	**25.4** 1.00	**97.3** 3.83	**102.8** 4.05	**47.8** 1.88	**81.8** 3.22	**24.3** 0.96	**1.9** 0.07	**72.9** 2.87	**95.3** 3.75	**5.5** 12
QAFE10A200S QAAFE10A200S	2 in.																		
QAFE10A050S QAAFE10A050S	**50 mm**																		
QAFE11A203S QAAFE11A203S	2 3/16 in.	22211	**175.0** 6.89	**82.6** 3.25	**130.3** 5.13	**124.0** 4.88	**157.2** 6.19	**34.9** 1.38	**M16** 5/8	**28.7** 1.13	**105.0** 4.13	**110.5** 4.35	**50.8** 2.00	**85.7** 3.38	**25.6** 1.01	**3.4** 0.14	**79.5** 3.13	**101.6** 4.00	**6.9** 15
QAFE11A204S QAAFE11A204S	2 1/4 in.																		
QAFE11A055S QAAFE11A055S	**55 mm**																		
QAFE13A060S QAAFE13A060S	**60 mm**	22213	**193.0** 7.60	**96.8** 3.81	**146.1** 5.75	**136.7** 5.38	**168.4** 6.63	**38.1** 1.50	**M16** 5/8	**31.5** 1.24	**114.2** 4.50	**116.2** 4.57	**54.6** 2.15	**97.8** 3.85	**28.5** 1.12	**5.3** 0.21	**86.1** 3.39	**109.2** 4.30	**8.9** 20
QAFE13A207S QAAFE13A207S	2 7/16 in.																		
QAFE13A208S QAAFE13A208S	2 1/2 in.																		
QAFE13A065S QAAFE13A065S	**65 mm**																		

[1] Bearing part numbers use QA to designate single-collar units (use S_A and R_A dimensions) and QAA to designate double-collar units (use S_{AA} and R_{AA} dimensions).

Continued on next page.

QAFE AND QAAFE STAINLESS STEEL SQUARE FLANGE BLOCKS – *continued*

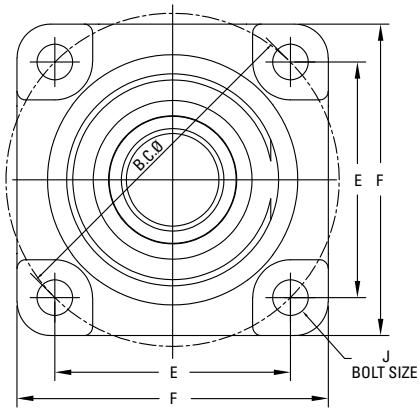

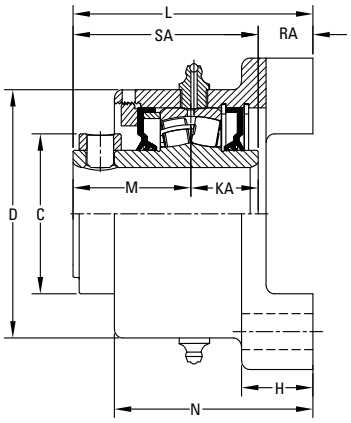

SINGLE LOCKING COLLAR

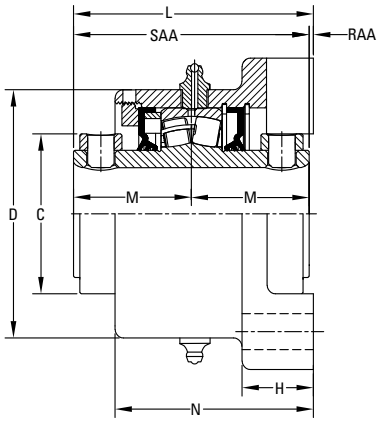

DOUBLE LOCKING COLLAR

Continued from previous page.

Bearing Part No.[1]	Shaft Dia.	Bearing No.	B.C.	C	D	E	F	H	J	K_A	L FIX	L EXP	M	N	R_A	R_{AA}	S_A	S_{AA}	Wt.
	mm in.		**mm** in.	**mm** in.	**mm** in.	**mm** in.	**mm** in.	**mm** in.	**mm** in.	**mm** in.	**mm** in.	**mm** in.	**mm** in.	**mm** in.	**mm** in.	**mm** in.	**mm** in.	**mm** in.	**kg** lbs.
QAFE15A211S QAAFE15A211S	2 1⁄16 in.	22215	**215.4** 8.48	**109.0** 4.29	**170.7** 6.72	**152.4** 6.00	**189.0** 7.44	**41.3** 1.63	**M20** 3⁄4	**31.8** 1.25	**122.9** 4.84	**125.9** 4.92	**60.2** 2.37	**103.2** 4.06	**30.9** 1.22	**2.5** 0.10	**91.9** 3.62	**120.4** 4.74	**12.4** 27
QAFE15A212S QAAFE15A212S	2 3⁄4 in.																		
QAFE15A070S QAAFE15A070S	**70 mm**																		
QAFE15A215S QAAFE15A215S	2 15⁄16 in.																		
QAFE15A300S QAAFE15A300S	3 in.																		
QAFE15A075S QAAFE15A075S	**75 mm**																		
QAFE18A303S QAAFE18A303S	3 3⁄16 in.	22218	**251.7** 9.91	**130.3** 5.13	**193.8** 7.63	**177.8** 7.00	**219.2** 8.63	**47.6** 1.88	**M20** 3⁄4	**36.6** 1.44	**135.0** 5.31	**136.9** 5.39	**65.8** 2.59	**111.8** 4.40	**32.5** 1.28	**3.3** 0.13	**102.4** 4.03	**131.6** 5.18	**18.1** 40
QAFE18A304S QAAFE18A304S	3 1⁄4 in.																		
QAFE18A080S QAAFE18A080S	**80 mm**																		
QAFE18A085S QAAFE18A085S	**85 mm**																		
QAFE18A307S QAAFE18A307S	3 7⁄16 in.																		
QAFE18A308S QAAFE18A308S	3 1⁄2 in.																		
QAFE18A090S QAAFE18A090S	**90 mm**																		
QAFE20A315S QAAFE20A315S	3 15⁄16 in.	22220	**278.4** 10.96	**152.4** 6.00	**224.0** 8.82	**196.9** 7.75	**253.2** 9.97	**54.0** 2.13	**M24** 7⁄8	**41.3** 1.62	**154.7** 6.09	**156.8** 6.17	**75.4** 2.97	**131.8** 5.19	**38.0** 1.50	**3.8** 0.15	**116.6** 4.59	**150.8** 5.94	**27.3** 60
QAFE20A400S QAAFE20A400S	4 in.																		
QAFE20A100S QAAFE20A100S	**100 mm**																		
QAAFE22A110S	**110 mm**	22222	**314.5** 12.38	**155.6** 6.13	**256.8** 10.11	**222.3** 8.75	**276.4** 10.88	**61.9** 2.44	**M24** 7⁄8	_	**172.2** 6.78	**174.3** 6.86	**79.5** 3.13	**143.5** 5.65	_	**13.3** 0.53	_	**158.8** 6.25	**38.1** 84
QAAFE22A407S	4 7⁄16 in.																		
QAAFE22A408S	4 1⁄2 in.																		
QAAFE22A115S	**115 mm**																		

[1]Bearing part numbers use QA to designate single-collar units (use S_A and R_A dimensions) and QAA to designate double-collar units (use S_{AA} and R_{AA} dimensions).

QAFL AND QAAFL SQUARE FLANGE BLOCKS

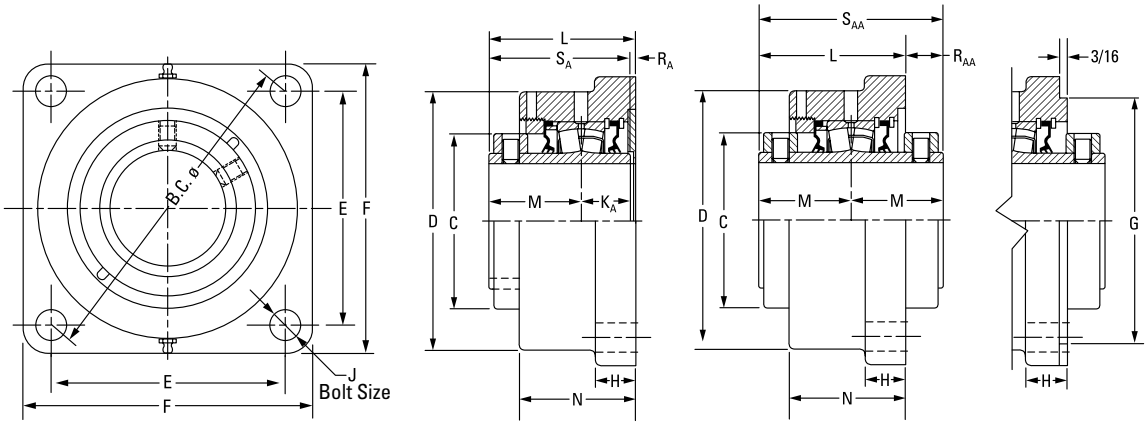

QA Single-Collar Unit **QAA Double-Collar Unit**

Bearing Part No.[1]	Shaft Dia.	Bearing No.	B.C.	C	D	E	F	G[2][3][4]	H	J	K_A	L FIX	L EXP	M	N	R_A	R_{AA}	S_A	S_{AA}	Wt.
	mm in.		**mm** in.	**mm** in.	**mm** in.	**mm** in.	**mm** in.	**mm** in.	**mm** in.	**mm** in.	**mm** in.	**mm** in.	**mm** in.	**mm** in.	**mm** in.	**mm** in.	**mm** in.	**mm** in.	**mm** in.	**mm** in.	**kg** lbs.
QAFL08A035S	**35 mm**	22208	**127.0** 5.00	**60.5** 2.38	**93.7** 3.69	**89.9** 3.54	**117.6** 4.63	N/A	**22.4** 0.88	**12** 1/2	**25.4** 1.00	**72.9** 2.87	**74.9** 2.95	**44.5** 1.75	**57.2** 2.25	**3.0** 0.12	–	**69.9** 2.75	–	**4.5** 10
QAFL08A107S	1 7/16 in.																			
QAFL08A108S	1 1/2 in.																			
QAFL09A040S	**40 mm**	22209	**139.7** 5.50	**66.8** 2.63	**118.4** 4.66	**98.8** 3.89	**136.7** 5.38	N/A	**22.4** 0.88	**12** 1/2	**25.4** 1.00	**79.5** 3.13	**81.5** 3.21	**47.8** 1.88	**63.5** 2.50	**6.6** 0.26	–	**73.2** 2.88	–	**5.0** 11
QAFL09A111S	1 11/16 in.																			
QAFL09A112S	1 3/4 in.																			
QAFL09A045S	**45 mm**																			
QAFL10A115S QAAFL10A115S	1 15/16 in.	22210	**146.1** 5.75	**73.2** 2.88	**115.3** 4.54	**103.4** 4.07	**131.8** 5.19	N/A	**23.1** 0.91	**12** 1/2	**25.4** 1.00	**80.8** 3.18	**82.8** 3.26	**47.5** 1.87	**62.5** 2.46	**7.9** 0.31	**15.2** 0.60	**72.9** 2.87	**95.3** 3.75	**5.0** 11
QAFL10A200S QAAFL10A200S	2 in.																			
QAFL10A050S QAAFL10A050S	**50 mm**																			
QAFL11A203S QAAFL11A203S	2 3/16 in.	22211	**162.1** 6.38	**82.6** 3.25	**131.8** 5.19	**114.3** 4.50	**149.4** 5.88	**N/A**	**19.1** 0.75	**16** 5/8	**28.7** 1.13	**83.3** 3.28	**85.3** 3.36	**50.8** 2.00	**66.8** 2.63	**3.8** 0.15	**18.3** 0.72	**79.5** 3.13	**101.6** 4.00	**6.4** 14
QAFL11A204S QAAFL11A204S	2 1/4 in.																			
QAFL11A055S QAAFL11A055S	**55 mm**																			
QAFL13A060S QAAFL13A060S	**60 mm**	22213	**171.5** 6.75	**96.8** 3.81	**146.1** 5.75	**121.2** 4.77	**157.2** 6.19	**N/A**	**25.4** 1.00	**16** 5/8	**31.5** 1.24	**89.2** 3.51	**91.2** 3.59	**54.6** 2.15	**72.6** 2.86	**3.0** 0.12	**20.1** 0.79	**86.1** 3.39	**109.2** 4.30	**7.7** 17
QAFL13A207S QAAFL13A207S	2 7/16 in.																			
QAFL13A208S QAAFL13A208S	2 1/2 in.																			
QAFL13A065S QAAFL13A065S	**65 mm**																			

[1] Bearing part numbers use QA to designate single-collar units (use S_A and R_A dimensions) and QAA to designate double-collar units (use S_{AA} and R_{AA} dimensions).
[2] Pilot tolerance: +0/-0.05 mm (+0/-0.002 in.).
[3] Add (p) to the end of the housing designation in the part number to order with pilot using G dimension.
[4] Piloted flange blocks will be quoted (price and delivery) upon request. For optional spigot on flange side, insert the letter P as seen in the following example: QMFP**J***S.

Continued on next page.

QAFL AND QAAFL SQUARE FLANGE BLOCKS – *continued*

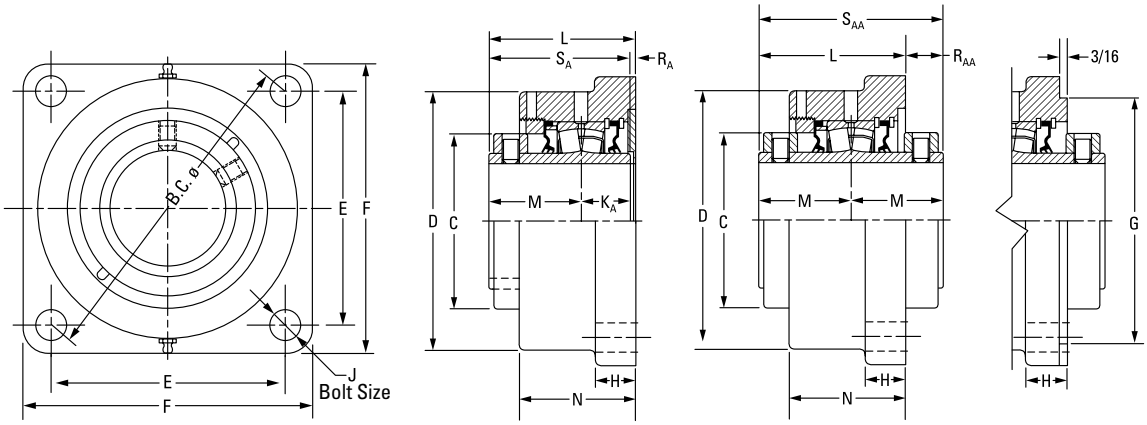

QA Single-Collar Unit **QAA Double-Collar Unit**

Continued from previous page.

Bearing Part No.[1]	Shaft Dia.	Bearing No.	B.C.	C	D	E	F	G[2][3][4]	H	J	K_A	L FIX	L EXP	M	N	R_A	R_{AA}	S_A	S_{AA}	Wt.
	mm in.		**mm** in.	**mm** in.	**mm** in.	**mm** in.	**mm** in.	**mm** in.	**mm** in.	**mm** in.	**mm** in.	**mm** in.	**mm** in.	**mm** in.	**mm** in.	**mm** in.	**mm** in.	**mm** in.	**mm** in.	**mm** in.	**kg** lbs.
QAFL15A211S QAAFL15A211S	2 1⁄16 in.	22215																		
QAFL15A212S QAAFL15A212S	2 3⁄4 in.																			
QAFL15A070S QAAFL15A070S	**70 mm**		**200.2** 7.88	**109.0** 4.29	**168.4** 6.63	**141.2** 5.56	**182.6** 7.19	N/A	**26.9** 1.06	**20** 3/4	**31.8** 1.25	**95.8** 3.77	**97.8** 3.85	**60.2** 2.37	**74.4** 2.93	**3.8** 0.15	**24.6** 0.97	**91.9** 3.62	**120.4** 4.74	**10.4** 23
QAFL15A215S QAAFL15A215S	2 15⁄16 in.																			
QAFL15A300S QAAFL15A300S	3 in.																			
QAFL15A075S QAAFL15A075S	**75 mm**																			
QAFL18A303S QAAFL18A303S	3 3⁄16 in.	22218																		
QAFL18A304S QAAFL18A304S	3 1⁄4 in.																			
QAFL18A080S QAAFL18A080S	**80 mm**		**241.3** 9.50	**130.3** 5.13	**193.8** 7.63	**170.7** 6.72	**212.9** 8.38	**187.33** 7.375	**32.5** 1.28	**20** 3/4	**36.6** 1.44	**106.4** 4.19	**108.5** 4.27	**65.8** 2.59	**86.4** 3.40	**4.1** 0.16	**25.1** 0.99	**102.4** 4.03	**131.6** 5.18	**15.9** 35
QAFL18A085S QAAFL18A085S	**85 mm**																			
QAFL18A307S QAAFL18A307S	3 7⁄16 in.																			
QAFL18A308S QAAFL18A308S	3 1⁄2 in.																			
QAFL18A090S QAAFL18A090S	**90 mm**																			
QAFL20A315S QAAFL20A315S	3 15⁄16 in.	22220																		
QAFL20A400S QAAFL20A400S	4 in.		**273.1** 10.75	**152.4** 6.00	**229.6** 9.04	**193.0** 7.60	**241.3** 9.50	**215.90** 8.500	**38.1** 1.50	**24** 1	**41.4** 1.63	**132.3** 5.21	**134.4** 5.29	**75.4** 2.97	**104.6** 4.12	**15.7** 0.62	**18.0** 0.71	**116.6** 4.59	**150.4** 5.92	**24.9** 55
QAFL20A100S QAAFL20A100S	**100 mm**																			

[1]Bearing part numbers use QA to designate single-collar units (use S_A and R_A dimensions) and QAA to designate double-collar units (use S_{AA} and R_{AA} dimensions).
[2]Pilot tolerance: +0/-0.05 mm (+0/-0.002 in.).
[3]Add (p) to the end of the housing designation in the part number to order with pilot using G dimension.
[4]Piloted flange blocks will be quoted (price and delivery) upon request. For optional spigot on flange side, insert the letter P as seen in the following example: QAFP**A***S

QAFMD AND QAAFMD SQUARE FLANGE BLOCKS

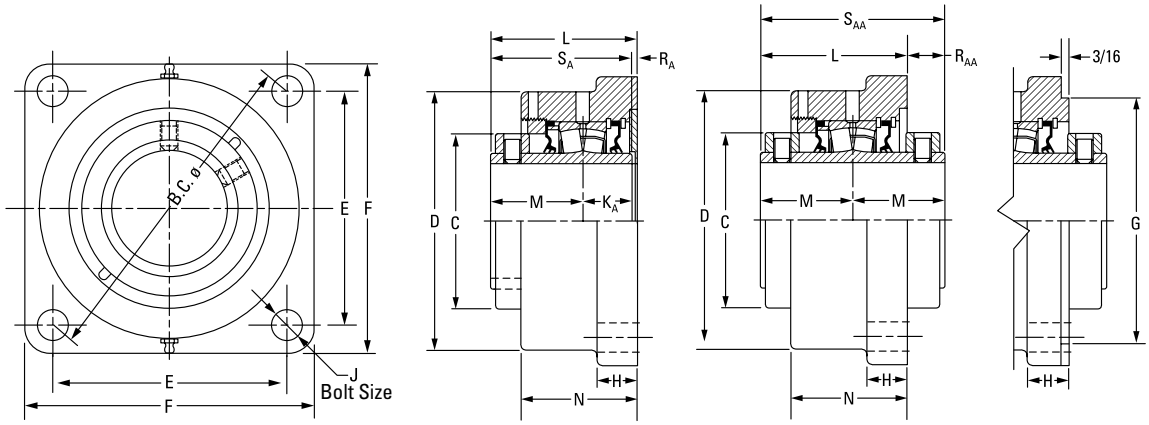

QA Single-Collar Unit **QAA Double-Collar Unit**

Bearing Part No.[1]	Shaft Dia.	Bearing No.	B.C.	C	D	E	F	H	J	K_A	L FIX	L EXP	M	N	R_A	R_{AA}	S_A	S_{AA}	Wt.
	mm in.		**mm** in.	**mm** in.	**mm** in.	**mm** in.	**mm** in.	**mm** in.	**mm** in.	**mm** in.	**mm** in.	**mm** in.	**mm** in.	**mm** in.	**mm** in.	**mm** in.	**mm** in.	**mm** in.	**kg** lbs.
QAFMD08A035S	**35 mm**	22208	**143.8** 5.66	**60.5** 2.38	**108.0** 4.25	**101.6** 4.00	**130.3** 5.13	**22.4** 0.88	**12** 1/2	**25.4** 1	**72.9** 2.87	**74.9** 2.95	**44.5** 1.75	**59.4** 2.34	**3.0** 0.12	-	**69.9** 2.75	-	**4.5** 10
QAFMD08A107S	1 7/16 in.																		
QAFMD08A108S	1 1/2 in.	22208	**148.3** 5.84	**60.5** 2.38	**108.0** 4.25	**104.9** 4.13	**136.7** 5.38	**22.4** 0.88	**12** 1/2	**25.4** 1	**73.7** 2.90	**75.9** 2.98	**44.5** 1.76	**59.4** 2.34	**3.8** 0.15	-	**69.9** 2.75	-	**4.5** 10
QAFMD09A110S	1 5/8 in.	22209	**148.3** 5.84	**66.8** 2.63	**108.0** 4.25	**104.9** 4.13	**136.7** 5.38	**22.4** 0.88	**12** 1/2	**25.4** 1	**79.5** 3.13	**81.5** 3.21	**47.8** 1.88	**63.5** 2.50	**6.4** 0.25	-	**73.2** 2.88	-	**5.0** 11
QAFMD09A040S	**40 mm**																		
QAFMD09A111S	1 11/16 in.	22209	**157.2** 6.19	**66.8** 2.63	**118.4** 4.66	**111.3** 4.38	**143.0** 5.63	**22.4** 0.88	**12** 1/2	**25.4** 1	**79.5** 3.13	**81.5** 3.21	**47.8** 1.88	**63.5** 2.50	**6.4** 0.25	-	**73.2** 2.88	-	**5.0** 11
QAFMD09A112S	1 3/4 in.																		
QAFMD09A045S	**45 mm**																		
QAFMD10A115S QAAFMD10A115S	1 15/16 in.	22210	**184.1** 7.25	**73.2** 2.88	**120.7** 4.75	**130.2** 5.13	**165.1** 6.50	**22.4** 0.88	**16** 5/8	**25.4** 1.00	**80.8** 3.18	**82.8** 3.26	**47.5** 1.87	**65.0** 2.56	**7.9** 0.31	**15.2** 0.60	**72.9** 2.87	**95.3** 3.75	**5.0** 11
QAFMD10A200S QAAFMD10A200S	2 in.																		
QAFMD10A050S QAAFMD10A050S	**50 mm**																		
QAFMD11A203S QAAFMD11A203S	2 3/16 in.	22211	**202.1** 7.96	**82.6** 3.25	**137.9** 5.43	**142.9** 5.63	**174.8** 6.88	**25.4** 1.00	**16** 5/8	**28.7** 1.13	**83.1** 3.27	**85.1** 3.35	**50.8** 2.00	**66.8** 2.63	**3.8** 0.15	**18.5** 0.73	**79.5** 3.13	**101.6** 4.00	**6.4** 14
QAFMD11A204S QAAFMD11A204S	2 1/4 in.																		
QAFMD11A055S QAAFMD11A055S	**55 mm**																		
QAFMD13A060S QAAFMD13A060S	**60 mm**	22213	**211.0** 8.31	**96.8** 3.81	**146.1** 5.75	**149.2** 5.88	**187.5** 7.38	**25.4** 1.00	**16** 5/8	**31.5** 1.24	**89.2** 3.51	**91.2** 3.59	**54.6** 2.15	**72.4** 2.85	**3.0** 0.12	**20.1** 0.79	**86.1** 3.39	**109.2** 4.30	**7.7** 17
QAFMD13A207S QAAFMD13A207S	2 7/16 in.																		
QAFMD13A208S QAAFMD13A208S	2 1/2 in.																		
QAFMD13A065S QAAFMD13A065S	**65 mm**																		

[1]Bearing part numbers use QA to designate single-collar units (use S_A and R_A dimensions) and QAA to designate double-collar units (use S_{AA} and R_{AA} dimensions).

Continued on next page.

QAFMD AND QAAFMD SQUARE FLANGE BLOCKS – *continued*

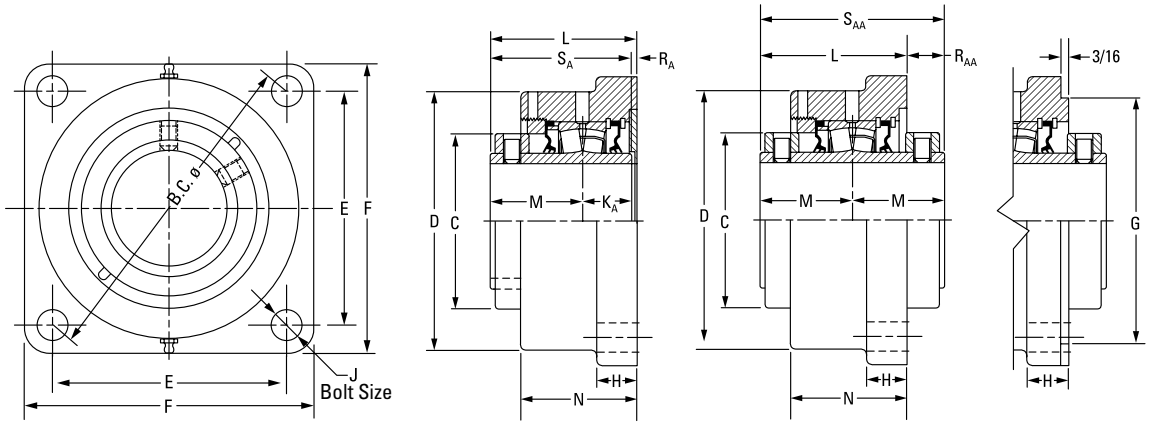

QA Single-Collar Unit **QAA Double-Collar Unit**

Continued from previous page.

Bearing Part No.[1]	Shaft Dia.	Bearing No.	B.C.	C	D	E	F	H	J	K_A	L FIX	L EXP	M	N	R_A	R_{AA}	S_A	S_{AA}	Wt.
	mm in.		**mm** in.	**mm** in.	**mm** in.	**mm** in.	**mm** in.	**mm** in.	**mm** in.	**mm** in.	**mm** in.	**mm** in.	**mm** in.	**mm** in.	**mm** in.	**mm** in.	**mm** in.	**mm** in.	**kg** lbs.
QAFMD15A211S QAAFMD15A211S	2 1/16 in.	22215																	
QAFMD15A212S QAAFMD15A212S	2 3/4 in.																		
QAFMD15A070S QAAFMD15A070S	**70 mm**		**215.4**	**109.0**	**168.9**	**152.4**	**189.0**	**26.9**	**20**	**31.8**	**95.8**	**97.8**	**60.2**	**76.2**	**3.8**	**24.6**	**91.9**	**120.4**	**10.4**
QAFMD15A215S QAAFMD15A215S	2 15/16 in.		8.48	4.29	6.65	6.00	7.44	1.06	3/4	1.25	3.77	3.85	2.37	3.00	0.15	0.97	3.62	4.74	23
QAFMD15A300S QAAFMD15A300S	3 in.																		
QAFMD15A075S QAAFMD15A075S	**75 mm**																		
QAFMD18A303S QAAFMD18A303S	3 3/16 in.	22218																	
QAFMD18A304S QAAFMD18A304S	3 1/4 in.																		
QAFMD18A080S QAAFMD18A080S	**80 mm**		**241.3**	**130.2**	**193.8**	**171.5**	**212.7**	**32.5**	**20**	**36.6**	**106.4**	**108.5**	**65.8**	**86.4**	**4.3**	**25.0**	**102.4**	**131.6**	**15.9**
QAFMD18A085S QAAFMD18A085S	**85 mm**		9.50	5.13	7.63	6.72	8.38	1.28	3/4	1.44	4.19	4.27	2.59	3.40	0.17	0.94	4.03	5.18	35
QAFMD18A307S QAAFMD18A307S	3 7/16 in.																		
QAFMD18A308S QAAFMD18A308S	3 1/2 in.																		
QAFMD18A090S QAAFMD18A090S	**90 mm**																		

[1]Bearing part numbers use QA to designate single-collar units (use S_A and R_A dimensions) and QAA to designate double-collar units (use S_{AA} and R_{AA} dimensions).

QAFBB BRACKET FLANGE BLOCKS

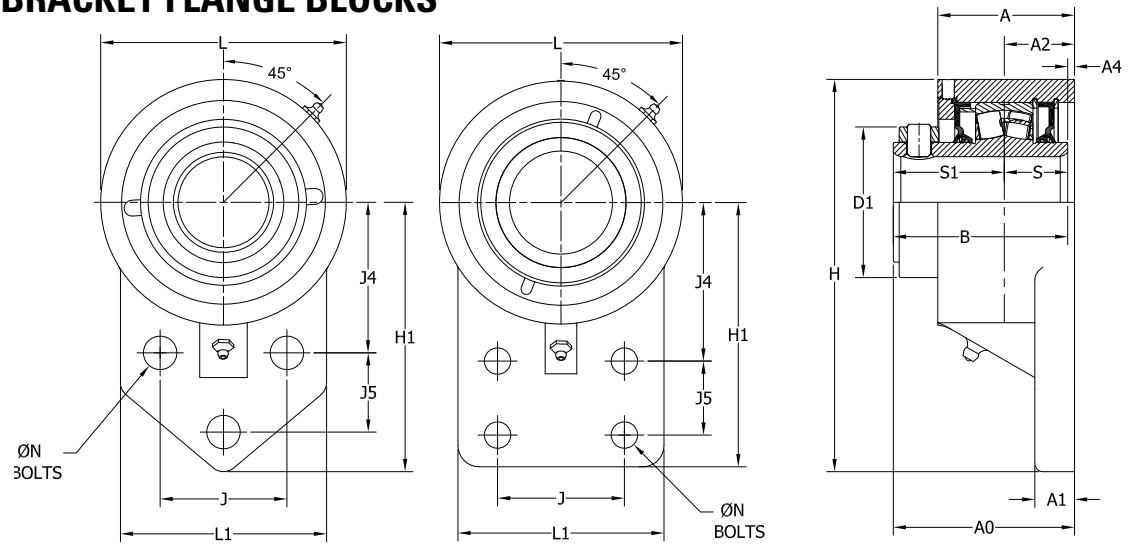

Bearing Part No.	Shaft Dia.	Bolt Pattern	Bearing No.	H	H_1	J	J_4	J_5	L	L_1	A	A_0	A_1	A_2	A_4	B	D_1	S	S_1	Bolt Size	Wt.
	mm in.			**mm** in.	**mm** in.	**mm** in.	**mm** in.	**mm** in.	**mm** in.	**mm** in.	**mm** in.	**mm** in.	**mm** in.	**mm** in.	**mm** in.	**mm** in.	**mm** in.	**mm** in.	**mm** in.	**mm** in.	**kg** lbs.
QAFBB08A107S	1 7⁄16 in.	**3-Bolt**	22208	**157.2** 6.19	**108.0** 4.25	**50.8** 2.00	**60.3** 2.38	**31.8** 1.25	**98.6** 3.88	**82.6** 3.25	**53.6** 2.11	**70.6** 2.78	**16.0** 0.63	**26.2** 1.03	**0.8** 0.03	**69.9** 2.75	**60.5** 2.38	**25.4** 1.00	**44.5** 1.75	**M12** 1⁄2	**2** 5.5
QAFBB08A108S	1 1⁄2 in.																				
QAFBB08A035S	**35 mm**																				
QAFBB10A115S	1 15⁄16 in.	**3-Bolt**	22210	**192.3** 7.57	**131.8** 5.19	**69.9** 2.75	**74.6** 2.94	**41.3** 1.63	**120.7** 4.75	**101.6** 4.00	**60.2** 2.37	**76.7** 3.02	**17.5** 0.69	**29.2** 1.15	**3.8** 0.15	**72.9** 2.87	**70.1** 2.76	**25.4** 1.00	**47.5** 1.87	**M12** 1⁄2	**4** 9.4
QAFBB10A200S	2 in.																				
QAFBB10A050S	**50 mm**																				
QAFBB13A207S	2 7⁄16 in.	**4-Bolt**	22213	**231.9** 9.13	**158.9** 6.26	**76.2** 3.00	**95.4** 3.75	**44.5** 1.75	**146.1** 5.75	**123.8** 4.88	**70.1** 2.76	**87.9** 3.46	**19.1** 0.75	**33.8** 1.33	**2.3** 0.09	**85.6** 3.37	**91.9** 3.62	**31.5** 1.24	**54.1** 2.13	**M16** 5⁄8	**7** 16.1
QAFBB13A208S	2 1⁄2 in.																				
QAFBB13A060S	**60 mm**																				
QAFBB15A211S	2 11⁄16 in.	**4-Bolt**	22215	**262.4** 10.33	**177.9** 7.01	**101.6** 4.00	**98.6** 3.88	**57.2** 2.25	**168.9** 6.65	**146.1** 5.75	**73.2** 2.88	**95.3** 3.75	**22.4** 0.88	**35.1** 1.38	**3.3** 0.13	**91.9** 3.62	**101.9** 4.01	**31.8** 1.25	**60.2** 2.37	**M20** 3⁄4	**11** 23.2
QAFBB15A212S	2 3⁄4 in.																				
QAFBB15A215S	2 15⁄16 in.																				
QAFBB15A070S	3 in.																				
QAFBB15A075S	**70 mm**																				
QAFBB15A300S	**75 mm**																				

QAAFX 5000 SERIES FLANGE BLOCKS

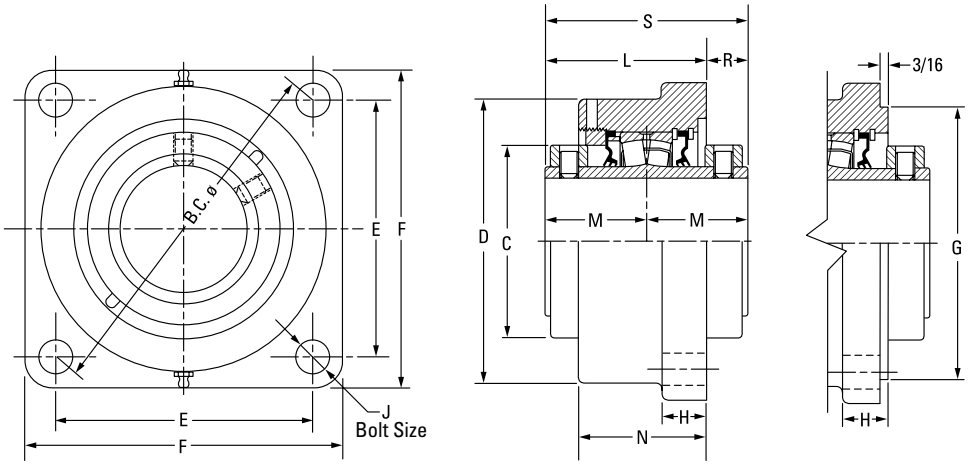

Bearing Part No.	Shaft Dia.	Bearing No.	B.C.	C	D	E	F	G [1][2][3]	H	J	L FIX	L EXP	M	N	R	S	Wt.
	mm in.		**mm** in.	**mm** in.	**mm** in.	**mm** in.	**mm** in.	**mm** in.	**mm** in.	**mm** in.	**mm** in.	**mm** in.	**mm** in.	**mm** in.	**mm** in.	**mm** in.	**kg** lbs.
QAAFX10A115S	1 15/16 in.	22210	**146.1** 5.75	**73.2** 2.88	**120.7** 4.75	**103.1** 4.06	**134.9** 5.31	**111.13** 4.375	**22.4** 0.88	**12** 1/2	**80.8** 3.18	**82.8** 3.26	**47.5** 1.87	**65.0** 2.56	**15.2** 0.60	**95.3** 3.75	**5.4** 12
QAAFX10A200S	2 in.																
QAAFX10A050S	**50 mm**																
QAAFX11A203S	2 3/16 in.	22211	**161.5** 6.36	**82.6** 3.25	**130.3** 5.13	**114.3** 4.50	**149.4** 5.88	**127.00** 5.000	**25.4** 1.00	**16** 5/8	**83.1** 3.27	**85.1** 3.35	**50.5** 1.99	**66.8** 2.63	**18.5** 0.73	**101.6** 4.00	**6.8** 15
QAAFX11A204S	2 1/4 in.																
QAAFX11A055S	**55 mm**																
QAAFX13A060S	**60 mm**	22213	**180.8** 7.12	**96.8** 3.81	**146.1** 5.75	**127.8** 5.03	**157.2** 6.19	**138.13** 5.438	**25.4** 1.00	**16** 5/8	**89.2** 3.51	**91.2** 3.59	**54.6** 2.15	**72.4** 2.85	**19.6** 0.77	**109.2** 4.30	**8.6** 19
QAAFX13A207S	2 7/16 in.																
QAAFX13A208S	2 1/2 in.																
QAAFX13A065S	**65 mm**																
QAAFX15A211S	2 11/16 in.	22215	**215.9** 8.50	**109.0** 4.29	**168.9** 6.65	**152.7** 6.01	**189.0** 7.44	**160.35** 6.313	**26.9** 1.06	**20** 3/4	**96.0** 3.78	**98.0** 3.86	**60.2** 2.37	**76.2** 3.00	**24.4** 0.96	**120.4** 4.74	**12.7** 28
QAAFX15A212S	2 3/4 in.																
QAAFX15A070S	**70 mm**																
QAAFX15A215S	2 15/16 in.																
QAAFX15A300S	3 in.																
QAAFX15A075S	**75 mm**																
QAAFX18A303S	3 3/16 in.	22218	**241.3** 9.50	**130.3** 5.13	**193.8** 7.63	**170.7** 6.72	**212.9** 8.38	**187.33** 7.375	**33.3** 1.31	**20** 3/4	**107.2** 4.22	**109.2** 4.30	**65.8** 2.59	**84.1** 3.31	**24.6** 0.97	**131.6** 5.18	**19.1** 42
QAAFX18A304S	3 1/4 in.																
QAAFX18A080S	**80 mm**																
QAAFX18A085S	**85 mm**																
QAAFX18A307S	3 7/16 in.																
QAAFX18A308S	3 1/2 in.																
QAAFX18A090S	**90 mm**																
QAAFX20A315S	3 15/16 in.	22220	**298.5** 11.75	**152.4** 6.00	**215.9** 8.50	**211.1** 8.31	**268.2** 10.56	**225.43** 8.875	**38.1** 1.50	**24** 7/8	**126.0** 4.96	**128.0** 5.04	**75.4** 2.97	**103.1** 4.06	**24.6** 0.97	**150.4** 5.92	**29.9** 66
QAAFX20A400S	4 in.																
QAAFX20A100S	**100 mm**																
QAAFX22A110S	**110 mm**	22222	**327.2** 12.88[4]	**160.0** 6.30	**256.5** 10.10	**163.6** 6.44[4]	**384.3** 15.13	**263.53** 10.375	**31.8** 1.25	**24** 7/8	**143.8** 5.66	**145.8** 5.74	**94.0** 3.70	**106.9** 4.21	**15.0** 0.59	**158.8** 6.25	**46.3** 102
QAAFX22A407S[4]	4 7/16 in.																
QAAFX22A408S[4]	4 1/2 in.																
QAAFX22A115S[4]	**115 mm**																
QAAFX26A125S[4]	**125 mm**	22226	**355.6** 14.00[4]	**175.0** 6.89	**284.2** 11.19	**177.8** 7.00[4]	**419.1** 16.50	**284.18** 11.188	**38.1** 1.50	**24** 1	**174.8** 6.88	**176.8** 6.96	**94.5** 3.72	**135.1** 5.32	**14.2** 0.56	**189.0** 7.44	**52.2** 115
QAAFX26A415S[4]	4 15/16 in.																
QAAFX26A500S[4]	5 in.																
QAAFX26A130S[4]	**130 mm**																

[1]Pilot tolerance: +0/-0.05 mm (+0/-0.002 in.).
[2]Add (p) to the end of the housing designation in the part number to order with pilot using G dimension.
[3]Piloted flange blocks will be quoted (price and delivery) upon request. For optional spigot on flange side, insert the letter P as seen in the following example: QMFP**J***S.
[4]Six-bolt round housing.

QAFY AND QAAFY ROUND FLANGE BLOCKS

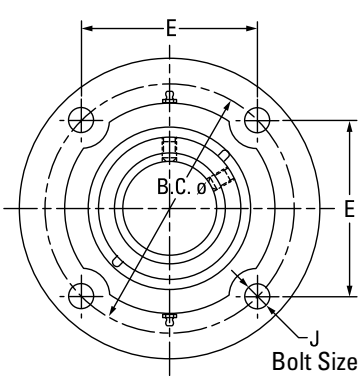

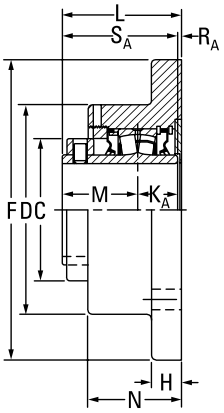

QA Single-Collar Unit

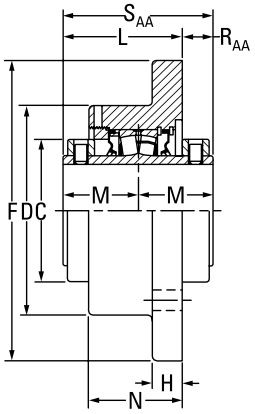

QAA Double-Collar Unit

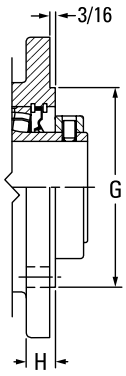

Bearing Part No.[1]	Shaft Dia.	Bearing No.	B.C.	C	D	E	F	G[2][3][4]	H	J	K_A	L FIX	L EXP	M	N	R_A	R_{AA}	S_A	S_{AA}	Wt.
	mm in.		**mm** in.	**mm** in.	**mm** in.	**mm** in.	**mm** in.	**mm** in.	**mm** in.	**mm** in.	**mm** in.	**mm** in.	**mm** in.	**mm** in.	**mm** in.	**mm** in.	**mm** in.	**mm** in.	**mm** in.	**mm** in.	**kg** lbs.
QAFY08A035S	**35 mm**	22208	**127.0** 5.00	**60.5** 2.38	**108.0** 4.25	**110.0** 4.33	**158.8** 6.25	**90.50** 3.563	**19.1** 0.75	**12** 1/2	**25.4** 1.00	**73.2** 2.88	**75.2** 2.96	**44.5** 1.75	**57.4** 2.26	**3.3** 0.13	–	**69.9** 2.75	–	**4.5** 10
QAFY08A107S	1 7/16 in.																			
QAFY08A108S	1 1/2 in.																			
QAFY09A040S	**40 mm**	22209	**139.7** 5.50	**66.8** 2.63	**104.9** 4.13	**98.8** 3.89	**171.5** 6.75	**103.20** 4.063	**20.6** 0.81	**12** 1/2	**25.4** 1.00	**76.2** 3.00	**78.2** 3.08	**47.8** 1.88	**60.5** 2.38	**3.0** 0.12	–	**73.2** 2.88	–	**5.0** 11
QAFY09A111S	1 11/16 in.																			
QAFY09A112S	1 3/4 in.																			
QAFY09A045S	**45 mm**																			
QAFY10A115S QAAFY10A115S	1 15/16 in.	22210	**146.1** 5.75	**73.2** 2.88	**115.3** 4.54	**103.4** 4.07	**177.8** 7.00	**111.13** 4.375	**19.1** 0.75	**12** 1/2	**25.4** 1.00	**75.9** 2.99	**78.0** 3.07	**47.5** 1.87	**57.2** 2.25	**3.0** 0.12	**20.1** 0.79	**72.9** 2.87	**95.3** 3.75	**5.4** 12
QAFY10A200S QAAFY10A200S	2 in.																			
QAFY10A050S QAAFY10A050S	**50 mm**																			
QAFY11A203S QAAFY11A203S	2 3/16 in.	22211	**162.1** 6.38	**82.6** 3.25	**130.3** 5.13	**114.3** 4.50	**196.9** 7.75	**127.00** 5.000	**19.1** 0.75	**16** 5/8	**28.7** 1.13	**82.3** 3.24	**84.3** 3.32	**50.8** 2.00	**62.0** 2.44	**3.0** 0.12	**19.3** 0.76	**79.5** 3.13	**101.6** 4.00	**6.8** 15
QAFY11A204S QAAFY11A204S	2 1/4 in.																			
QAFY11A055S QAAFY11A055S	**55 mm**																			
QAFY13A060S QAAFY13A060S	**60 mm**	22213	**171.5** 6.75	**96.8** 3.81	**146.1** 5.75	**121.2** 4.77	**206.5** 8.13	**138.13** 5.438	**23.9** 0.94	**16** 5/8	**31.5** 1.24	**91.2** 3.49	**93.2** 3.67	**54.6** 2.15	**72.4** 2.85	**5.1** 0.20	**20.6** 0.81	**86.1** 3.39	**109.2** 4.30	**8.6** 19
QAFY13A207S QAAFY13A207S	2 7/16 in.																			
QAFY13A208S QAAFY13A208S	2 1/2 in.																			
QAFY13A065S QAAFY13A065S	**65 mm**																			

[1] Bearing part numbers use QA to designate single-collar units (use S_A and R_A dimensions) and QAA to designate double-collar units (use S_{AA} and R_{AA} dimensions).
[2] Pilot tolerance: +0/-0.05 mm (+0/-0.002 in.).
[3] Add (p) to the end of the housing designation in the part number to order with pilot using G dimension.
[4] Piloted flange blocks will be quoted (price and delivery) upon request. For optional spigot on flange side, insert the letter P as seen in the following example: QMFP**J***S.
[5] Six-bolt housing.

Continued on next page.

QAFY AND QAAFY ROUND FLANGE BLOCKS – *continued*

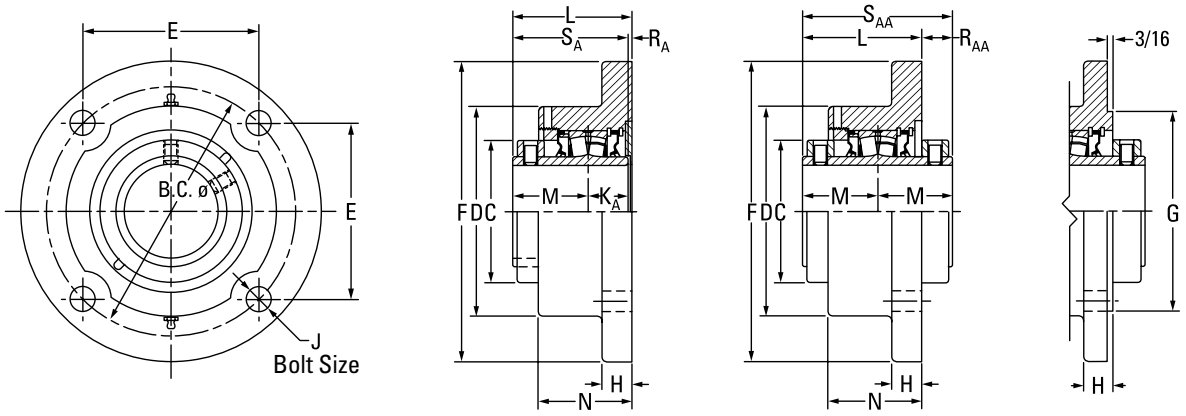

QA Single-Collar Unit **QAA Double-Collar Unit**

Continued from previous page.

Bearing Part No.[1]	Shaft Dia.	Bearing No.	B.C.	C	D	E	F	G[2][3][4]	H	J	K_A	L FIX	L EXP	M	N	R_A	R_{AA}	S_A	S_{AA}	Wt.
	mm in.		**mm** in.	**mm** in.	**mm** in.	**mm** in.	**mm** in.	**mm** in.	**mm** in.	**mm** in.	**mm** in.	**mm** in.	**mm** in.	**mm** in.	**mm** in.	**mm** in.	**mm** in.	**mm** in.	**mm** in.	**kg** lbs.
QAFY15A211S QAAFY15A211S	2 1⁄16 in.	22215	**200.2** 7.88	**109.0** 4.29	**168.4** 6.63	**141.5** 5.57	**241.3** 9.50	**160.35** 6.313	**23.9** 0.94	**20** 3⁄4	**31.8** 1.25	**98.3** 3.87	**100.3** 3.95	**60.2** 2.37	**74.4** 2.93	**6.4** 0.25	**21.8** 0.86	**91.9** 3.62	**120.4** 4.74	**12.7** 28
QAFY15A212S QAAFY15A212S	2 3⁄4 in.																			
QAFY15A070S QAAFY15A070S	**70 mm**																			
QAFY15A215S QAAFY15A215S	2 15⁄16 in.																			
QAFY15A300S QAAFY15A300S	3 in.																			
QAFY15A075S QAAFY15A075S	**75 mm**																			
QAFY18A303S QAAFY18A303S	3 3⁄16 in.	22218	**241.3** 9.50	**130.3** 5.13	**193.8** 7.63	**170.7** 6.72	**282.7** 11.13	N/A	**28.7** 1.13	**24** 7⁄8	**36.6** 1.44	**108.7** 4.28	**110.7** 4.36	**65.8** 2.59	**85.3** 3.36	**6.4** 0.25	**22.9** 0.90	**102.4** 4.03	**131.6** 5.18	**19.1** 42
QAFY18A304S QAAFY18A304S	3 1⁄4 in.																			
QAFY18A080S QAAFY18A080S	**80 mm**																			
QAFY18A085S QAAFY18A085S	**85 mm**																			
QAFY18A307S QAAFY18A307S	3 7⁄16 in.																			
QAFY18A308S QAAFY18A308S	3 1⁄2 in.																			
QAFY18A090S QAAFY18A090S	**90 mm**																			
QAFY20A315S QAAFY20A315S	3 15⁄16 in.	22220	**273.1** 10.75	**152.4** 6.00	**222.5** 8.76	**193.0** 7.60	**320.8** 12.63	N/A	**28.7** 1.13	**24** 1	**41.4** 1.63	**123.7** 4.87	**125.7** 4.95	**75.4** 2.97	**103.1** 4.06	**6.9** 0.27	**26.7** 1.05	**116.6** 4.59	**150.4** 5.92	**29.9** 66
QAFY20A400S QAAFY20A400S	4 in.																			
QAFY20A100S QAAFY20A100S	**100 mm**																			
QAAFY22A110S[5]	**110 mm**	22222	**327.2** 12.88[5]	**160.0** 6.30	**254.0** 10.00	**163.6** 6.44[5]	**384.3** 15.13	N/A	**31.8** 1.25	**24** 1[5]	–	**129.0** 5.08	**131.1** 5.16	**79.5** 3.13	**100.3** 3.95	–	**30.0** 1.18	–	**158.8** 6.25	**46.3** 102
QAAFY22A407S[5]	4 7⁄16 in.																			
QAAFY22A408S[5]	4 1⁄2 in.																			
QAAFY22A115S[5]	**115 mm**																			
QAAFY26A125S[5]	**125 mm**	22226	**355.6** 14.00[5]	**175.0** 6.89	**284.2** 11.19	**177.8** 7.00[5]	**419.1** 16.50	N/A	**38.1** 1.50	**27** 1 1⁄8[5]	–	**169.9** 6.69	**172.0** 6.77	**94.5** 3.72	**139.7** 5.50	–	**19.1** 0.75	–	**189.0** 7.44	**52.2** 115
QAAFY26A415S[5]	4 15⁄16 in.																			
QAAFY26A500S[5]	5 in.																			
QAAFY26A130S[5]	**130 mm**																			

[1]Bearing part numbers use QA to designate single-collar units (use S_A and R_A dimensions) and QAA to designate double-collar units (use S_{AA} and R_{AA} dimensions).
[2]Pilot tolerance: +0/-0.05 mm (+0/-0.002 in.).
[3]Add (p) to the end of the housing designation in the part number to order with pilot using G dimension.
[4]Piloted flange blocks will be quoted (price and delivery) upon request. For optional spigot on flange side, insert the letter P as seen in the following example: QMFP**J***S.
[5]Six-bolt housing.

QAMC AND QAAMC CARTRIDGE BLOCKS

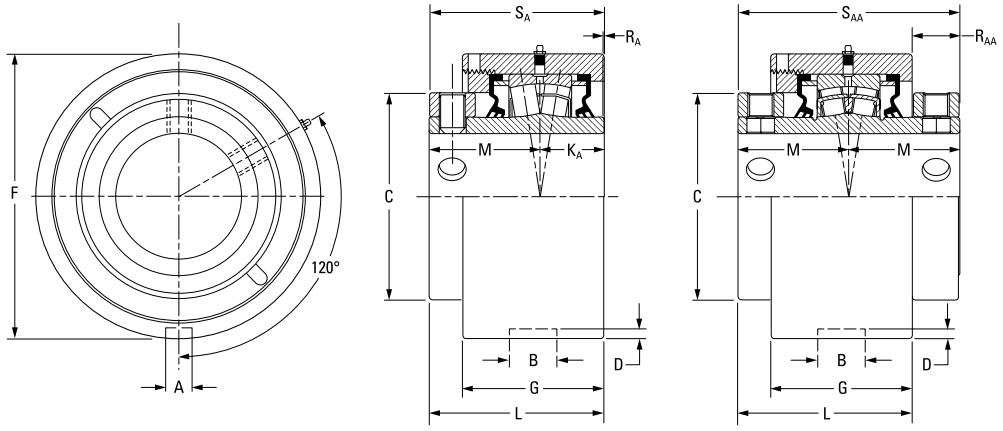

QA Single-Collar Unit **QAA Double-Collar Unit**

Bearing Part No.[1]	Shaft Dia.	Bearing No.	A	B	C	D	F	G	K_A	L FIX	L EXP	M	R_A	R_{AA}	S_A	S_{AA}	Wt.
	mm in.		**mm** in.	**mm** in.	**mm** in.	**mm** in.	**mm** in.	**mm** in.	**mm** in.	**mm** in.	**mm** in.	**mm** in.	**mm** in.	**mm** in.	**mm** in.	**mm** in.	**kg** lbs.
QAMC10A115S QAAMC10A115S	1 15/16 in.	22210	**13.5** 0.53	**23.1** 0.91	**73.2** 2.88	**4.8** 0.19	**104.78 (+0/-0.05)** 4.125 (+0/-0.002)	**62.2** 2.45	**25.4** 1.00	**79.2** 3.12	**81.3** 3.20	**47.5** 1.87	**6.1** 0.24	**16.8** 0.66	**72.9** 2.87	**95.3** 3.75	**3.6** 8
QAMC10A200S QAAMC10A200S	2 in.																
QAMC10A050S QAAMC10A050S	**50 mm**																
QAMC11A203S QAAMC11A203S	2 3/16 in.	22211	**13.5** 0.53	**23.1** 0.91	**82.6** 3.25	**4.8** 0.19	**115.09 (+0/-0.05)** 4.531 (+0/-0.002)	**65.5** 2.58	**28.7** 1.13	**83.8** 3.30	**85.9** 3.38	**50.8** 2.00	**4.1** 0.16	**18.0** 0.71	**79.5** 3.13	**101.6** 4.00	**4.5** 10
QAMC11A204S QAAMC11A204S	2 1/4 in.																
QAMC11A055S QAAMC11A055S	**55 mm**																
QAMC13A060S QAAMC13A060S	**60 mm**	22213	**13.5** 0.53	**23.1** 0.91	**96.8** 3.81	**3.6** 0.14	**127.00 (+0/-0.05)** 5.000 (+0/-0.002)	**69.3** 2.73	**31.5** 1.24	**85.9** 3.38	**87.9** 3.46	**54.6** 2.15	**0.0** 0.00	**14.0** 0.55	**86.1** 3.39	**109.2** 4.30	**5.4** 12
QAMC13A207S QAAMC13A207S	2 7/16 in.																
QAMC13A208S QAAMC13A208S	2 1/2 in.																
QAMC13A065S QAAMC13A065S	**65 mm**																
QAMC15A211S QAAMC15A211S	2 11/16 in.	22215	**15.0** 0.59	**26.2** 1.03	**109.0** 4.29	**6.4** 0.25	**149.225 (+0/-0.05)** 5.875 (+0/-0.002)	**79.8** 3.14	**31.8** 1.25	**100.6** 3.96	**102.6** 4.04	**60.2** 2.37	**8.1** 0.32	**19.8** 0.78	**91.9** 3.62	**120.4** 4.74	**8.2** 18
QAMC15A212S QAAMC15A212S	2 3/4 in.																
QAMC15A070S QAAMC15A070S	**70 mm**																
QAMC15A215S QAAMC15A215S	2 15/16 in.																
QAMC15A300S QAAMC15A300S	3 in.																
QAMC15A075S QAAMC15A075S	**75 mm**																

[1]Bearing part numbers use QA to designate single-collar units (use S_A and R_A dimensions) and QAA to designate double-collar units (use S_{AA} and R_{AA} dimensions).

Continued on next page.

QAMC AND QAAMC CARTRIDGE BLOCKS – *continued*

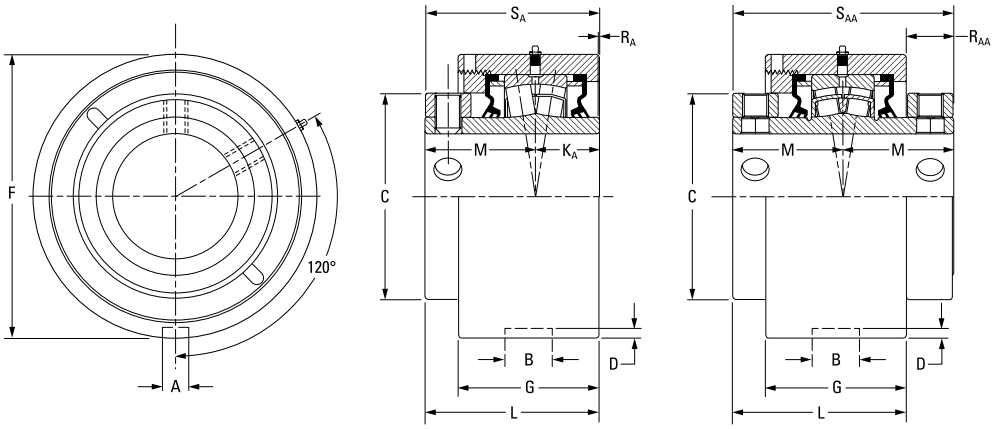

QA Single-Collar Unit **QAA Double-Collar Unit**

Continued from previous page.

Bearing Part No.[1]	Shaft Dia.	Bearing No.	A	B	C	D	F	G	K_A	L FIX	L EXP	M	R_A	R_{AA}	S_A	S_{AA}	Wt.
	mm in.		**mm** in.	**mm** in.	**mm** in.	**mm** in.	**mm** in.	**mm** in.	**mm** in.	**mm** in.	**mm** in.	**mm** in.	**mm** in.	**mm** in.	**mm** in.	**mm** in.	**kg** lbs.
QAMC18A303S QAAMC18A303S	3 3⁄16 in.																
QAMC18A304S QAAMC18A304S	3 1⁄4 in.																
QAMC18A080S QAAMC18A080S	**80 mm**																
QAMC18A085S QAAMC18A085S	**85 mm**	22218	**15.0** 0.59	**26.9** 1.06	**130.3** 5.13	**5.8** 0.23	**171.45 (+0/-0.05)** 6.750 (+0/-0.002)	**87.6** 3.45	**36.6** 1.44	**110.2** 4.34	**112.3** 4.42	**65.8** 2.59	**7.4** 0.29	**21.3** 0.84	**102.4** 4.03	**131.6** 5.18	**11.8** 26
QAMC18A307S QAAMC18A307S	3 7⁄16 in.																
QAMC18A308S QAAMC18A308S	3 1⁄2 in.																
QAMC18A090S QAAMC18A090S	**90 mm**																
QAMC20A315S QAAMC20A315S	3 15⁄16 in.																
QAMC20A400S QAAMC20A400S	4 in.	22220	**19.8** 0.78	**32.5** 1.28	**152.4** 6.00	**7.9** 0.31	**206.375 (+0/-0.05)** 8.125 (+0/-0.002)	**105.2** 4.14	**41.4** 1.63	**128.3** 5.05	**130.3** 5.13	**75.4** 2.97	**11.4** 0.45	**22.6** 0.89	**116.6** 4.59	**150.9** 5.94	**14.5** 32
QAMC20A100S QAAMC20A100S	**100 mm**																
QAAMC22A110S	**110 mm**																
QAAMC22A407S	4 7⁄16 in.		**19.8**	**38.1**	**160.0**	**7.9**	**222.25 (+0/-0.08)**	**108.5**		**133.6**	**135.6**	**79.5**		**25.1**		**158.8**	**18.1**
QAAMC22A408S	4 1⁄2 in.	22222	0.78	1.50	6.30	0.31	8.75 (+0/-0.003)	4.27	–	5.26	5.34	3.13	–	0.99	–	6.25	40
QAAMC22A115	**115 mm**																
QAAMC26A125S	**125 mm**																
QAAMC26A415S	4 15⁄16 in.		**19.8**	**38.1**	**175.0**	**7.9**	**265.13 (+0/-0.08)**	**141.7**		**165.4**	**167.4**	**94.5**		**23.6**		**189.0**	**18.1**
QAAMC26A500S	5 in.	22226	0.78	1.50	6.89	0.31	10.438 (+0/-0.003)	5.58	–	6.51	6.59	3.72	–	0.93	–	7.44	40
QAAMC26A130S	**130 mm**																

[1]Bearing part numbers use QA to designate single-collar units (use S_A and R_A dimensions) and QAA to designate double-collar units (use S_{AA} and R_{AA} dimensions).

QATU AND QAATU TAKE-UP BLOCKS

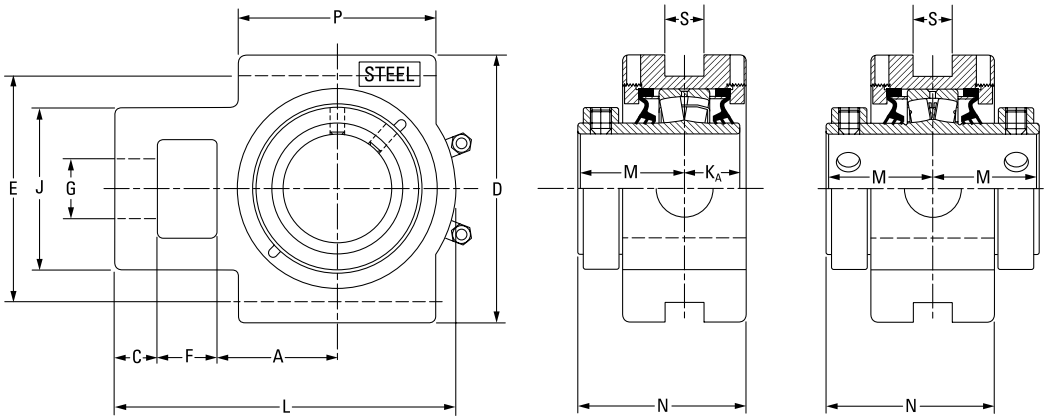

QA Single-Collar Unit **QAA Double-Collar Unit**

Bearing Part No.[1]	Shaft Dia.	Bearing No.	A	C	D	E	F	G	J	K_A	L	M	N	P	S	Wt.
	mm in.		**mm** in.	**mm** in.	**mm** in.	**mm** in.	**mm** in.	**mm** in.	**mm** in.	**mm** in.	**mm** in.	**mm** in.	**mm** in.	**mm** in.	**mm** in.	**kg** lbs.
QATU10A115S QAATU10A115S	1 15/16 in.	22210	**54.1** 2.13	**19.1** 0.75	**120.7** 4.75	**101.6** 4.00	**26.9** 1.06	**26.9** 1.06	**73.2** 2.88	**25.4** 1.00	**153.4** 6.04	**47.5** 1.87	**75.7** 2.98	**88.9** 3.50	**17.5** 0.69	**7.7** 17
QATU10A200S QAATU10A200S	2 in.															
QATU10A050S QAATU10A050S	**50 mm**															
QATU11A203S QAATU11A203S	2 3/16 in.	22211	**60.5** 2.38	**19.1** 0.75	**133.4** 5.25	**114.3** 4.50	**28.7** 1.13	**30.2** 1.19	**88.9** 3.50	**28.7** 1.13	**167.9** 6.61	**50.8** 2.00	**81.8** 3.22	**95.3** 3.75	**20.6** 0.81	**9.5** 21
QATU11A204S QAATU11A204S	2 1/4 in.															
QATU11A055S QAATU11A055S	**55 mm**															
QATU13A060S QAATU13A060S	**60 mm**	22213	**69.9** 2.75	**22.4** 0.88	**149.4** 5.88	**130.3** 5.13	**33.3** 1.31	**35.1** 1.38	**95.3** 3.75	**31.5** 1.24	**193.8** 7.63	**54.6** 2.15	**91.2** 3.59	**120.7** 4.75	**26.9** 1.06	**12.2** 27
QATU13A207S QAATU13A207S	2 7/16 in.															
QATU13A208S QAATU13A208S	2 1/2 in.															
QATU13A065S QAATU13A065S	**65 mm**															
QATU15A211S QAATU15A211S	2 11/16 in.	22215	**76.2** 3.00	**25.4** 1.00	**171.5** 6.75	**150.9** 5.94	**39.6** 1.56	**39.6** 1.56	**108.0** 4.25	**31.8** 1.25	**219.7** 8.65	**60.2** 2.37	**97.0** 3.82	**120.7** 4.75	**46.0** 1.81	**15.9** 35
QATU15A212S QAATU15A212S	2 3/4 in.															
QATU15A070S QAATU15A070S	**70 mm**															
QATU15A215S QAATU15A215S	2 15/16 in.															
QATU15A300S QAATU15A300S	3 in.															
QATU15A075S QAATU15A075S	**75 mm**															

[1]Bearing part numbers use QA to designate single-collar units and QAA to designate double-collar units.

Continued on next page.

NOTE: Please refer to page 257 for take-up frames.

QATU AND QAATU TAKE-UP BLOCKS – *continued*

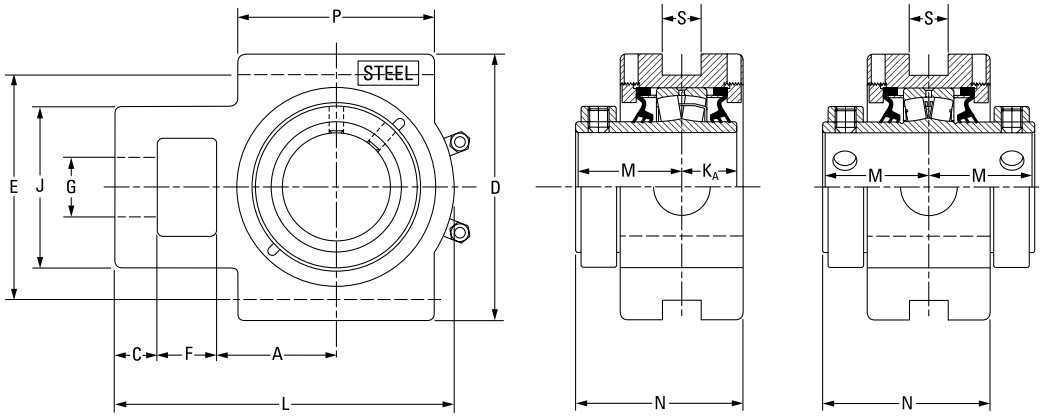

QA Single-Collar Unit **QAA Double-Collar Unit**

Continued from previous page.

Bearing Part No.[1]	Shaft Dia.	Bearing No.	A	C	D	E	F	G	J	K_A	L	M	N	P	S	Wt.
	mm in.		**mm** in.	**mm** in.	**mm** in.	**mm** in.	**mm** in.	**mm** in.	**mm** in.	**mm** in.	**mm** in.	**mm** in.	**mm** in.	**mm** in.	**mm** in.	**kg** lbs.
QATU18A303S QAATU18A303S	3 3⁄16 in.	22218	**92.2** 3.63	**25.4** 1.00	**193.8** 7.63	**173.0** 6.81	**46.0** 1.81	**47.8** 1.88	**124.0** 4.88	**36.6** 1.44	**257.0** 10.12	**65.8** 2.59	**107.2** 4.22	**158.8** 6.25	**46.0** 1.81	**20.0** 44
QATU18A304S QAATU18A304S	3 1⁄4 in.															
QATU18A080S QAATU18A080S	**80 mm**															
QATU18A085S QAATU18A085S	**85 mm**															
QATU18A307S QAATU18A307S	3 7⁄16 in.															
QATU18A308S QAATU18A308S	3 1⁄2 in.															
QATU18A090S QAATU18A090S	**90 mm**															
QATU20A315S QAATU20A315S	3 15⁄16 in.	22220	**104.9** 4.13	**28.7** 1.13	**239.8** 9.44	**219.2** 8.63	**54.1** 2.13	**52.3** 2.06	**143.0** 5.63	**41.4** 1.63	**296.9** 11.69	**75.4** 2.97	**121.7** 4.79	**177.8** 7.00	**52.3** 2.06	**26.3** 58
QATU20A400S QAATU20A400S	4 in.															
QATU20A100S QAATU20A100S	**100 mm**															
QAATU22A110S	**110 mm**	22222	**128.5** 5.06	**38.1** 1.50	**263.7** 10.38	**241.3** 9.50	**54.1** 2.13	**54.1** 2.13	**162.1** 6.38	–	**341.4** 13.44	**79.5** 3.13	**143.8** 5.66	**199.9** 7.87	**52.3** 2.06	**36.4** 80
QAATU22A407S	4 7⁄16 in.															
QAATU22A408S	4 1⁄2 in.															
QAATU22A115S	**115 mm**															
QAATU26A125S	**125 mm**	22226	**134.9** 5.31	**63.5** 2.50	**285.8** 11.25	**260.4** 10.25	**63.5** 2.50	**60.5** 2.38	**177.8** 7.00	–	**396.7** 15.62	**94.5** 3.72	**150.9** 5.94	**228.6** 9.00	**52.3** 2.06	**60.8** 134
QAATU26A415S	4 15⁄16 in.															
QAATU26A500S	5 in.															
QAATU26A130S	**130 mm**															

[1]Bearing part numbers use QA to designate single-collar units and QAA to designate double-collar units.
NOTE: Please refer to page 257 for take-up frames.

QATP AND QAATP TOP ANGLE TAKE-UP BLOCKS

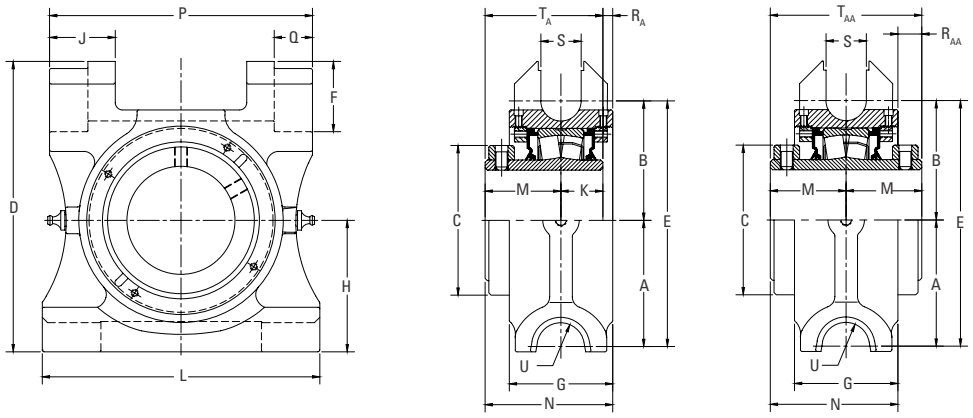

QATP QAATP

Bearing Part No.	Shaft Dia.	Bearing No.	A	B	C	D	E	F	G	H	J	K	L	M	N	P	Q	R_A	R_{AA}	S	T_A	T_{AA}	U
	mm in.		**mm** in.	**mm** in.	**mm** in.	**mm** in.	**mm** in.	**mm** in.	**mm** in.	**mm** in.	**mm** in.	**mm** in.	**mm** in.	**mm** in.	**mm** in.	**mm** in.	**mm** in.	**mm** in.	**mm** in.	**mm** in.	**mm** in.	**mm** in.	**kg** lbs.
QATP10A115S QAATP10A115S	1 15⁄16 in.	22210	**71.4** 2.81	**60.5** 2.38	**73.0** 2.88	**163.6** 6.44	**131.8** 5.19	**42.2** 1.66	**62.7** 2.47	**77.8** 3.06	**41.9** 1.65	**25.0** 0.98	**165.1** 6.50	**48.0** 1.89	**79.3** 3.12	**152.4** 6.00	**20.6** 0.81	**6.3** 0.25	**16.7** 0.66	**22.4** 0.88	**73.0** 2.87	**96.0** 3.78	**20.6** 0.81
QATP10A200S QAATP10A200S	2 in.																						
QATP10A050S QAATP10A050S	**50 mm**																						
QATP11A203S QAATP11A203S	2 3⁄16 in.	22211	**82.6** 3.25	**72.8** 2.87	**82.6** 3.25	**193.8** 7.63	**158.8** 6.25	**49.3** 1.94	**69.9** 2.75	**88.9** 3.50	**44.4** 1.75	**28.7** 1.13	**190.6** 7.50	**50.8** 2.00	**88.5** 3.49	**177.8** 7.0	**26.9** 1.06	**9.0** 0.36	**13.1** 0.51	**98.4** 1.12	**79.5** 3.13	**101.6** 4.0	**20.6** 0.81
QATP11A204S QAATP11A204S	2 1⁄4 in.																						
QATP11A055S QAATP11A055S	**55 mm**																						
QATP13A207S QAATP13A207S	2 7⁄16 in.	22213	**96.8** 3.81	**84.6** 3.33	**96.6** 3.81	**210.3** 8.28	**181.4** 7.14	**47.8** 1.88	**81.0** 3.19	**97.5** 3.84	**44.5** 1.75	**31.5** 1.24	**215.9** 8.50	**54.5** 2.15	**95.0** 3.74	**203.2** 8.00	**26.9** 1.06	**9.0** 0.35	**14.0** 0.55	**28.4** 1.12	**86.0** 3.39	**109.0** 4.29	**20.6** 0.81
QATP13A208S QAATP13A208S	2 1⁄2 in.																						
QATP13A060S QAATP13A060S	**60 mm**																						
QATP15A211S QAATP15A211S	2 11⁄16 in.	22215	**97.0** 3.82	**84.1** 3.31	**108.9** 4.29	**215.9** 8.50	**181.1** 7.13	**49.3** 1.94	**81.0** 3.19	**101.4** 3.99	**44.4** 1.75	**31.8** 1.25	**215.9** 8.50	**60.2** 2.37	**100.7** 3.96	**203.2** 8.00	**26.9** 1.06	**8.7** 0.34	**19.7** 0.78	**28.4** 1.12	**92.0** 3.62	**120.4** 4.74	**20.6** 0.81
QATP15A212S QAATP15A212S	2 3⁄4 in.																						
QATP15A070S QAATP15A070S	**70 mm**																						
QATP15A215S QAATP15A215S	2 15⁄16 in.																						
QATP15A300S QAATP15A300S	3 in.																						
QATP15A075S QAATP15A075S	**75 mm**																						

Continued on next page.

QATP AND QAATP TOP ANGLE TAKE-UP BLOCKS – *continued*

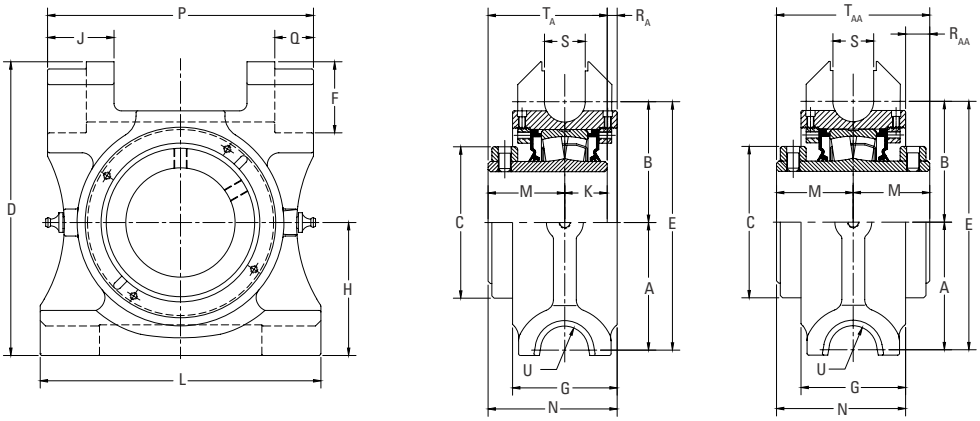

QATP QAATP

Continued from previous page.

Bearing Part No.	Shaft Dia.	Bearing No.	A	B	C	D	E	F	G	H	J	K	L	M	N	P	Q	R_A	R_{AA}	S	T_A	T_{AA}	U
	mm in.		**mm** in.	**mm** in.	**mm** in.	**mm** in.	**mm** in.	**mm** in.	**mm** in.	**mm** in.	**mm** in.	**mm** in.	**mm** in.	**mm** in.	**mm** in.	**mm** in.	**mm** in.	**mm** in.	**mm** in.	**mm** in.	**mm** in.	**mm** in.	**kg** lbs.
QATP18A303S QAATP18A303S	3 3⁄16 in.	22218	**109.7** 4.32	**103.9** 4.09	**130.2** 5.13	**252.5** 9.94	**213.6** 8.41	**61.3** 2.41	**90.0** 3.54	**114.3** 4.50	**57.1** 2.25	**36.5** 1.44	**241.3** 9.50	**65.9** 2.59	**110.9** 4.37	**228.6** 9.00	**33.3** 1.31	**8.6** 0.34	**20.8** 0.82	**35.1** 1.38	**102.4** 4.03	**131.8** 5.19	**20.6** 0.81
QATP18A304S QAATP18A304S	3 1⁄4 in.																						
QATP18A080S QAATP18A080S	**80 mm**																						
QATP18A085S QAATP18A085S	**85 mm**																						
QATP18A307S QAATP18A307S	3 7⁄16 in.																						
QATP18A308S QAATP18A308S	3 1⁄2 in.																						
QATP18A090S QAATP18A090S	**90 mm**																						
QATP20A311S QAATP20A311S	3 11⁄16 in.	22220	**121.0** 4.76	**117.6** 4.63	**152.4** 6.00	**289.1** 11.38	**234.9** 9.25	**63.5** 2.50	**79.5** 3.13	**139.7** 5.50	**58.7** 2.31	**41.3** 1.63	**279.4** 11.00	**75.4** 2.97	**126.1** 4.97	**266.7** 10.50	**33.3** 1.31	**9.4** 0.37	**24.7** 0.97	**35.1** 1.38	**116.7** 4.59	**150.8** 5.94	**20.6** 0.81
QATP20A312S QAATP20A312S	3 3⁄4 in.																						
QATP20A315S QAATP20A315S	3 15⁄16 in.																						
QATP20A400S QAATP20A400S	4 in.																						
QATP20A100S QAATP20A100S	**100 mm**																						

QAMH AND QAAMH HANGER BLOCKS

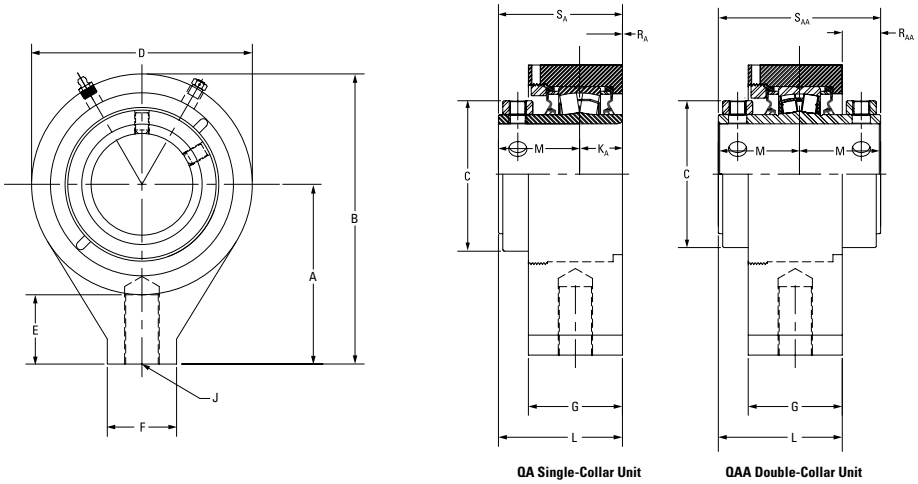

Bearing Part No.	Shaft Dia.	Bearing No.	A	B	C	D	E	F	G	J	K_A	L	M	R_A	R_{AA}	S_A	S_{AA}	Wt.
	mm in.		**mm** in.	**mm** in.	**mm** in.	**mm** in.	**mm** in.	**mm** in.	**mm** in.	in.	**mm** in.	**mm** in.	**mm** in.	**mm** in.	**mm** in.	**mm** in.	**mm** in.	**kg** lbs.
QAMH15A211S QAAMH15A211S	2 11/16 in.	22215	**131.8** 5.19	**212.9** 8.38	**109.0** 4.29	**162.1** 6.38	**50.8** 2.00	**50.8** 2.00	**69.9** 2.75	1 - 8UNC	**31.8** 1.25	**91.9** 3.62	**60.2** 2.37	**0.0** 0.00	**28.4** 1.12	**91.9** 3.62	**120.7** 4.75	**10.0** 22
QAMH15A212S QAAMH15A212S	2 3/4 in.																	
QAMH15A070S QAAMH15A070S	**70 mm**																	
QAMH15A215S QAAMH15A215S	2 15/16 in.																	
QAMH15A300S QAAMH15A300S	3 in.																	
QAMH15A075S QAAMH15A075S	**75 mm**																	
QAMH18A303S QAAMH18A303S	3 3/16 in.	22218	**160.3** 6.31	**260.4** 10.25	**130.3** 5.13	**200.2** 7.88	**63.5** 2.50	**76.2** 3.00	**76.2** 3.00	1 1/4 - 7UNC	**36.6** 1.44	**99.3** 3.91	**65.8** 2.59	**3.0** 0.12	**32.3** 1.27	**102.4** 4.03	**131.6** 5.18	**16.3** 36
QAMH18A304S QAAMH18A304S	3 1/4 in.																	
QAMH18A080S QAAMH18A080S	**80 mm**																	
QAMH18A085S QAAMH18A085S	**85 mm**																	
QAMH18A307S QAAMH18A307S	3 7/16 in.																	
QAMH18A308S QAAMH18A308S	3 1/2 in.																	
QAMH18A090S QAAMH18A090S	**90 mm**																	

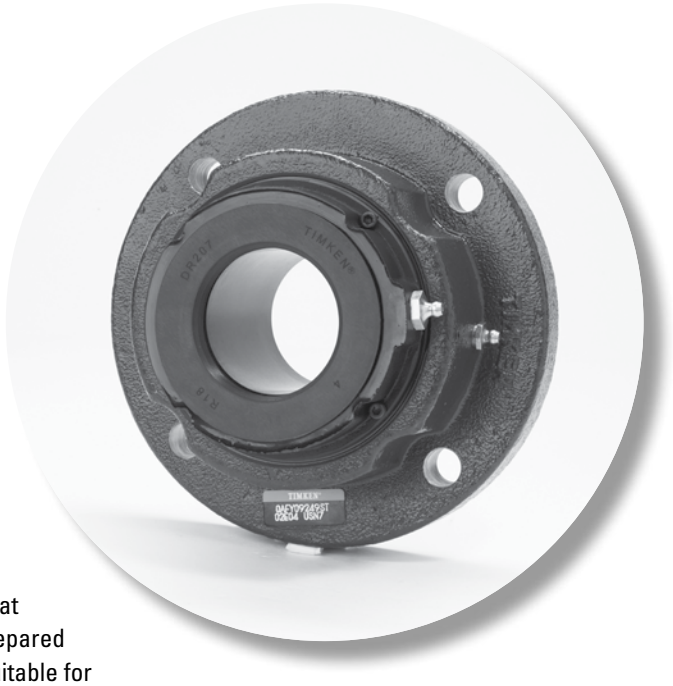

EC SERIES

The reduced eccentric offset of our EC series locking collar results in a secure shaft lock that is designed not to release from a properly prepared shaft. EC series mounted bearings also are suitable for reversing applications.

The following topics are covered within this section:

Introduction. 182
QMP Two-Bolt Pillow Blocks 183
QMPL Two-Bolt Pillow Blocks 184
QMPMD Two-Bolt Pillow Blocks. 185
QMPF Four-Bolt Pillow Blocks. 186
QMPR Four-Bolt Pillow Blocks 187
QMPH and QMPG Four-Bolt Pillow Blocks 188
QMPX 5000 Series Four-Bolt Pillow Blocks. 189
QMPXT 5000 Series Two-Bolt Pillow Blocks. 191
QMSN SN-Style Two-Bolt Pillow Blocks. 192
QMC Piloted Flange Cartridges 194
QMCMD Piloted Flange Cartridges. 195
QMCW Piloted Flange Cartridges 196
QMF Four-Bolt Square Flange Blocks 198
QMFL Four-Bolt Square Flange Blocks 199
QMFMD Four-Bolt Square Flange Blocks 200
QMFBB Bracket Flange Blocks. 201
QMFY Round Flange Blocks. 202
QMFX 5000 Series Square Flange Blocks 204
QMMC Cartridge Blocks. 206
QMTU Take-Up Blocks 208
QMTP Top Angle Take-Up Blocks 209
QMMH Hanger Blocks 210

EC SERIES



Fig. 49. EC series eccentric lock.

YOU HAVE CHOICES

For the EC series, you can select from many seal configurations and housing styles, which are shown on page 15.

HOUSINGS

- Two-bolt pillow blocks
- Four-bolt pillow blocks
- Flange blocks
- Piloted flange cartridges
- Take-up blocks
- Cartridge blocks
- Hanger blocks

SEALS

- Labyrinth: DuPont™ Teflon® (T)
- Triple-lip: nitrile rubber (M), urethane (O) and Viton® (N)
- Double-lip: nitrile rubber (B) and Viton (C)
- Steel and urethane closed-end covers (CS)
- Steel and urethane open-end covers (CJ) with:
  - DuPont Teflon (T)
  - Triple-lip seal (DR)
  - V-ring seal (VR)
- Piloted flange cartridge backing plates (HSY) with:
  - Triple-lip seal (DR)
- Flange block backing plates (UFP)
  - V-ring (VR)

QMP TWO-BOLT PILLOW BLOCKS

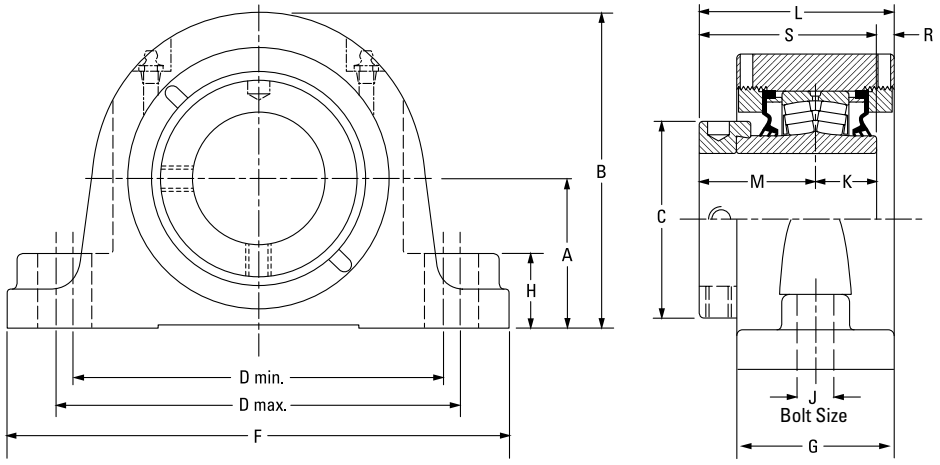

Bearing Part No.	Shaft Dia.	Bearing No.	A	B	C	D min.	D max.	F	G	H	J	K	L	M	R	S	Wt.
	mm in.		**mm** in.	**mm** in.	**mm** in.	**mm** in.	**mm** in.	**mm** in.	**mm** in.	**mm** in.	**mm** in.	**mm** in.	**mm** in.	**mm** in.	**mm** in.	**mm** in.	**kg** lbs.
QMP08J035S	**35 mm**	22208	**47.8** 1.88	**94.7** 3.73	**60.5** 2.38	**119.1** 4.69	**152.4** 6.00	**174.8** 6.88	**57.2** 2.25	**25.4** 1.00	**12** 1/2	**25.4** 1.00	**73.2** 2.88	**44.5** 1.75	**3.3** 0.13	**69.9** 2.75	**4.1** 9
QMP08J107S	1 7/16 in.																
QMP08J108S	1 1/2 in.	22208	**54.1** 2.13	**101.1** 3.98	**60.5** 2.38	**119.1** 4.69	**165.1** 6.50	**200.2** 7.88	**57.2** 2.25	**25.4** 1.00	**12** 1/2	**25.4** 1.00	**73.2** 2.88	**44.5** 1.75	**3.3** 0.13	**69.9** 2.75	**4.1** 9
QMP09J111S	1 11/16 in.	22209	**54.1** 2.13	**104.9** 4.13	**66.5** 2.62	**144.8** 5.70	**165.1** 6.50	**200.2** 7.88	**60.2** 2.37	**31.8** 1.25	**12** 1/2	**25.4** 1.00	**77.7** 3.06	**47.8** 1.88	**4.8** 0.19	**73.2** 2.88	**4.5** 10
QMP09J040S	**40 mm**	22209	**57.2** 2.25	**108.0** 4.25	**66.5** 2.62	**158.8** 6.25	**180.8** 7.12	**225.6** 8.88	**62.0** 2.44	**31.8** 1.25	**16** 5/8	**25.4** 1.00	**78.7** 3.10	**47.8** 1.88	**5.8** 0.23	**73.2** 2.88	**4.5** 10
QMP09J112S	1 3/4 in.																
QMP09J045S	**45 mm**																
QMP10J115S	1 15/16 in.	22210	**57.2** 2.25	**122.2** 4.81	**71.4** 2.81	**152.4** 6.00	**181.1** 7.13	**225.6** 8.88	**62.0** 2.44	**31.8** 1.25	**16** 5/8	**25.4** 1.00	**79.0** 3.11	**47.5** 1.87	**6.1** 0.24	**72.9** 2.87	**5.9** 13
QMP10J200S	2 in.																
QMP10J050S	**50 mm**																
QMP11J203S	2 3/16 in.	22211	**63.5** 2.50	**133.4** 5.25	**75.9** 2.99	**165.1** 6.50	**200.2** 7.88	**244.6** 9.63	**66.8** 2.63	**31.8** 1.25	**16** 5/8	**28.7** 1.13	**84.1** 3.31	**50.8** 2.00	**4.8** 0.19	**79.5** 3.13	**7.7** 17
QMP11J204S	2 1/4 in.																
QMP11J055S	**55 mm**																
QMP13J060S	**60 mm**	22213	**69.9** 2.75	**147.3** 5.80	**91.9** 3.62	**174.8** 6.88	**219.2** 8.63	**260.4** 10.25	**73.7** 2.90	**35.1** 1.38	**16** 5/8	**31.5** 1.24	**91.2** 3.59	**54.1** 2.13	**5.3** 0.21	**85.6** 3.37	**10.0** 22
QMP13J207S	2 7/16 in.																
QMP13J208S	2 1/2 in.																
QMP13J065S	**65 mm**																
QMP15J211S	2 11/16 in.	22215	**79.5** 3.13	**164.3** 6.47	**101.9** 4.01	**200.2** 7.88	**244.6** 9.63	**295.4** 11.63	**76.2** 3.00	**35.1** 1.38	**20** 3/4	**31.8** 1.25	**98.3** 3.87	**60.2** 2.37	**6.4** 0.25	**91.9** 3.62	**12.7** 28
QMP15J212S	2 3/4 in.																
QMP15J070S	**70 mm**																
QMP15J215S	2 15/16 in.																
QMP15J300S	3 in.																
QMP15J075S	**75 mm**																
QMP18J303S	3 3/16 in.	22218	**95.3** 3.75	**195.3** 7.69	**120.9** 4.76	**238.3** 9.38	**285.8** 11.25	**342.9** 13.50	**86.6** 3.41	**47.8** 1.88	**24** 7/8	**36.6** 1.44	**109.2** 4.30	**65.8** 2.59	**7.1** 0.28	**102.4** 4.03	**20.4** 45
QMP18J304S	3 1/4 in.																
QMP18J080S	**80 mm**																
QMP18J085S	**85 mm**																
QMP18J307S	3 7/16 in.																
QMP18J308S	3 1/2 in.																
QMP18J090S	**90 mm**																
QMP20J311S	3 11/16 in.	22220	**104.9** 4.13	**209.8** 8.26	**152.4** 6.00	**255.0** 10.04	**320.0** 12.60	**362.0** 14.25	**94.7** 3.73	**50.8** 2.00	**24** 1	**41.4** 1.63	**122.9** 4.84	**75.2** 2.96	**6.1** 0.24	**116.6** 4.59	**26.8** 59
QMP20J312S	3 3/4 in.																
QMP20J315S	3 15/16 in.																
QMP20J400S	4 in.																
QMP20J100S	**100 mm**																

QMPL TWO-BOLT PILLOW BLOCKS

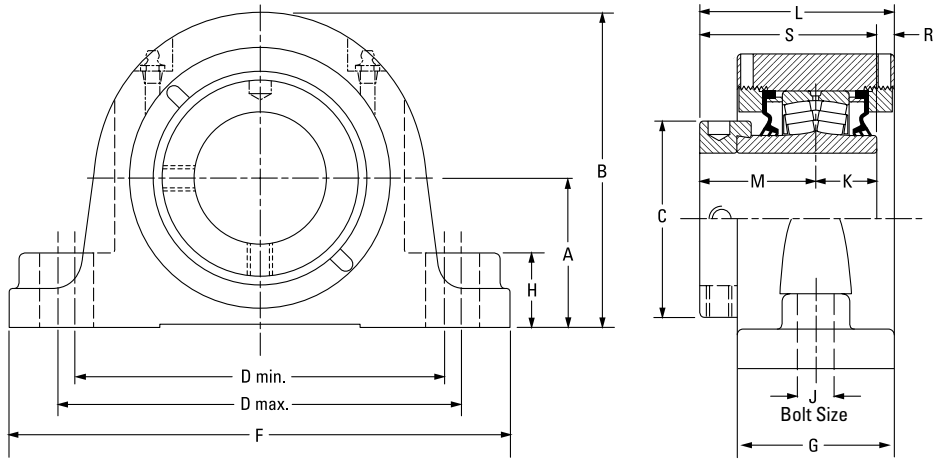

Bearing Part No.	Shaft Dia.	Bearing No.	A	B	C	D min.	D max.	F	G	H	J	K	L	M	R	S	Wt.
	mm in.		**mm** in.	**mm** in.	**mm** in.	**mm** in.	**mm** in.	**mm** in.	**mm** in.	**mm** in.	**mm** in.	**mm** in.	**mm** in.	**mm** in.	**mm** in.	**mm** in.	**kg** lbs.
QMPL08J035S	**35 mm**	22208	**47.8** 1.88	**94.7** 3.73	**60.5** 2.38	**119.1** 4.69	**152.4** 6.00	**174.8** 6.88	**57.2** 2.25	**25.4** 1.00	**12** 1/2	**25.4** 1.00	**73.2** 2.88	**44.5** 1.75	**3.3** 0.13	**69.9** 2.75	**4.1** 9
QMPL08J107S	1 7/16 in.																
QMPL08J108S	1 1/2 in.																
QMPL09J040S	**40 mm**	22209	**54.1** 2.13	**104.9** 4.13	**66.5** 2.62	**133.4** 5.25	**146.1** 5.75	**181.1** 7.13	**60.2** 2.37	**31.8** 1.25	**12** 1/2	**25.4** 1.00	**77.7** 3.06	**47.8** 1.88	**4.8** 0.19	**73.2** 2.88	**4.5** 10
QMPL09J111S	1 11/16 in.																
QMPL09J112S	1 3/4 in.																
QMPL09J045S	**45 mm**																
QMPL10J115S	1 15/16 in.	22210	**57.2** 2.25	**122.2** 4.81	**71.4** 2.81	**150.6** 5.93	**161.5** 6.36	**212.9** 8.38	**62.0** 2.44	**31.8** 1.25	**16** 5/8	**25.4** 1.00	**79.0** 3.11	**47.5** 1.87	**6.1** 0.24	**72.9** 2.87	**5.9** 13
QMPL10J200S	2 in.																
QMPL10J050S	**50 mm**																
QMPL11J203S	2 3/16 in.	22211	**63.5** 2.50	**133.4** 5.25	**75.9** 2.99	**165.1** 6.50	**179.3** 7.06	**225.6** 8.88	**65.5** 2.58	**31.8** 1.25	**16** 5/8	**28.4** 1.12	**83.3** 3.28	**50.8** 2.00	**4.3** 0.17	**79.2** 3.12	**7.7** 17
QMPL11J204S	2 1/4 in.																
QMPL11J055S	**55 mm**																
QMPL13J060S	**60 mm**	22213	**69.9** 2.75	**147.3** 5.80	**91.9** 3.62	**173.0** 6.81	**189.0** 7.44	**235.0** 9.25	**73.7** 2.90	**35.1** 1.38	**16** 5/8	**31.5** 1.24	**90.9** 3.58	**54.1** 2.13	**5.3** 0.21	**85.6** 3.37	**10.0** 22
QMPL13J207S	2 7/16 in.																
QMPL13J208S	2 1/2 in.																
QMPL13J065S	**65 mm**																
QMPL15J211S	2 11/16 in.	22215	**82.6** 3.25	**167.4** 6.59	**101.9** 4.01	**195.6** 7.70	**213.4** 8.40	**265.2** 10.44	**76.2** 3.00	**35.1** 1.38	**20** 3/4	**31.8** 1.25	**98.3** 3.87	**60.2** 2.37	**6.4** 0.25	**91.9** 3.62	**12.7** 28
QMPL15J212S	2 3/4 in.																
QMPL15J070S	**70 mm**																
QMPL15J215S	2 15/16 in.																
QMPL15J300S	3 in.																
QMPL15J075S	**75 mm**																
QMPL18J303S	3 3/16 in.	22218	**95.3** 3.75	**195.3** 7.69	**120.9** 4.76	**235.0** 9.25	**273.1** 10.75	**330.2** 13.00	**86.6** 3.41	**47.8** 1.88	**24** 7/8	**36.6** 1.44	**109.2** 4.30	**65.8** 2.59	**7.1** 0.28	**102.4** 4.03	**20.4** 45
QMPL18J304S	3 1/4 in.																
QMPL18J080S	**80 mm**																
QMPL18J085S	**85 mm**																
QMPL18J307S	3 7/16 in.																
QMPL18J308S	3 1/2 in.																
QMPL18J090S	**90 mm**																
QMPL20J311S	3 11/16 in.	22220	**108.0** 4.25	**212.9** 8.38	**152.4** 6.00	**255.0** 10.04	**320.0** 12.60	**362.0** 14.25	**94.7** 3.73	**53.8** 2.12	**24** 1	**41.4** 1.63	**122.9** 4.84	**75.2** 2.96	**6.1** 0.24	**116.6** 4.59	**26.8** 59
QMPL20J312S	3 3/4 in.																
QMPL20J315S	3 15/16 in.																
QMPL20J400S	4 in.																
QMPL20J100S	**100 mm**																

QMPMD TWO-BOLT PILLOW BLOCKS

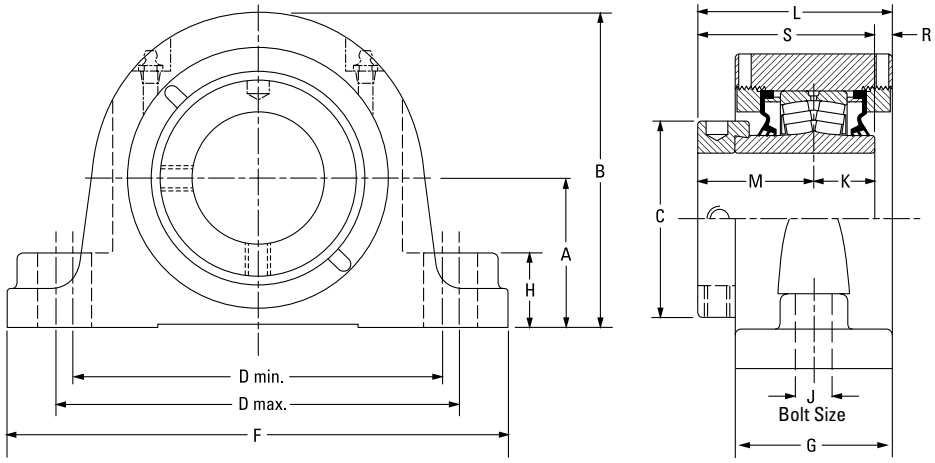

Bearing Part No.	Shaft Dia.	Bearing No.	A	B	C	D min.	D max.	F	G	H	J	K	L	M	R	S	Wt.
	mm in.		**mm** in.	**mm** in.	**mm** in.	**mm** in.	**mm** in.	**mm** in.	**mm** in.	**mm** in.	**mm** in.	**mm** in.	**mm** in.	**mm** in.	**mm** in.	**mm** in.	**kg** lbs.
QMPMD08J035S	**35 mm**	22208	**54.1** 2.13	**110.5** 4.35	**60.5** 2.38	**131.6** 5.18	**149.4** 5.88	**184.2** 7.25	**57.2** 2.25	**25.4** 1.00	**12** 1/2	**25.4** 1.00	**73.2** 2.88	**44.5** 1.75	**3.3** 0.13	**69.9** 2.75	**4.1** 9
QMPMD08J107S	1 7/16 in.																
QMPMD08J108S	1 1/2 in.	22208	**54.1** 2.13	**100.8** 3.97	**60.0** 2.36	**119.1** 4.69	**165.1** 6.50	**189.0** 7.44	**57.2** 2.25	**25.4** 1.00	**12** 1/2	**25.4** 1.00	**75.4** 2.97	**44.5** 1.75	**3.2** 0.13	**69.9** 2.75	**4.1** 9
QMPMD09J040S	**40 mm**	22209	**54.1** 2.13	**113.3** 4.46	**66.8** 2.63	**139.7** 5.5	**157.2** 6.19	**189.0** 7.44	**62.0** 2.44	**25.4** 1.00	**12** 1/2	**25.4** 1.00	**78.7** 3.10	**47.8** 1.88	**5.6** 0.22	**73.2** 2.88	**4.5** 10
QMPMD09J111S	1 11/16 in.	22209	**57.2** 2.25	**116.3** 4.58	**66.8** 2.63	**152.4** 6.00	**169.7** 6.68	**206.2** 8.12	**62.0** 2.44	**31.8** 1.25	**16** 5/8	**25.4** 1.00	**78.7** 3.10	**47.8** 1.88	**5.6** 0.22	**73.2** 2.88	**4.5** 10
QMPMD09J112S	1 3/4 in.																
QMPMD09J045S	**45 mm**																
QMPMD10J115S	1 15/16 in.	22210	**63.5** 2.50	**127.2** 5.00	**71.4** 2.81	**162.1** 6.38	**189.0** 7.44	**225.6** 8.88	**62.0** 2.44	**31.8** 1.25	**16** 5/8	**25.4** 1.00	**79.0** 3.11	**47.5** 1.87	**6.1** 0.24	**72.9** 2.87	**5.9** 13
QMPMD10J200S	2 in.																
QMPMD10J050S	**50 mm**																
QMPMD11J203S	2 3/16 in.	22211	**69.9** 2.75	**139.7** 5.50	**82.6** 3.25	**174.8** 6.88	**201.7** 7.94	**241.3** 9.50	**66.8** 2.63	**38.1** 1.50	**16** 5/8	**28.7** 1.13	**84.3** 3.32	**50.8** 2.00	**4.8** 0.19	**79.2** 3.13	**7.7** 17
QMPMD11J204S	2 1/4 in.																
QMPMD11J055S	**55 mm**																
QMPMD13J060S	**60 mm**	22213	**76.2** 3.00	**153.7** 6.05	**92.0** 3.62	**190.5** 7.50	**223.0** 8.78	**273.1** 10.75	**73.7** 2.90	**34.9** 1.38	**20** 3/4	**31.5** 1.24	**91.4** 3.60	**54.6** 2.15	**5.3** 0.21	**86.0** 3.39	**10.0** 22
QMPMD13J207S	2 7/16 in.																
QMPMD13J208S	2 1/2 in.																
QMPMD13J065S	**65 mm**																
QMPMD15J211S	2 11/16 in.	22215	**88.9** 3.50	**171.5** 6.75	**109.0** 4.29	**215.9** 8.50	**241.3** 9.50	**298.5** 11.75	**76.2** 3.00	**38.1** 1.50	**24** 7/8	**31.8** 1.25	**98.3** 3.87	**60.2** 2.37	**6.4** 0.25	**91.9** 3.62	**12.7** 28
QMPMD15J212S	2 3/4 in.																
QMPMD15J070S	**70 mm**																
QMPMD15J215S	2 15/16 in.																
QMPMD15J300S	3 in.																
QMPMD15J075S	**75 mm**																
QMPMD18J303S	3 3/16 in.	22218	**101.6** 4.00	**201.7** 7.94	**121.0** 4.76	**262.1** 10.32	**295.1** 11.62	**344.9** 13.58	**85.9** 3.38	**28.4** 1.12	**24** 7/8	**36.6** 1.44	**109.2** 4.30	**65.8** 2.59	**6.35** 0.25	**102.4** 4.03	**20.4** 45
QMPMD18J304S	3 1/4 in.																
QMPMD18J080S	**80 mm**																
QMPMD18J085S	**85 mm**																
QMPMD18J307S	3 7/16 in.																
QMPMD18J308S	3 1/2 in.																
QMPMD18J090S	**90 mm**																

QMPF FOUR-BOLT PILLOW BLOCKS

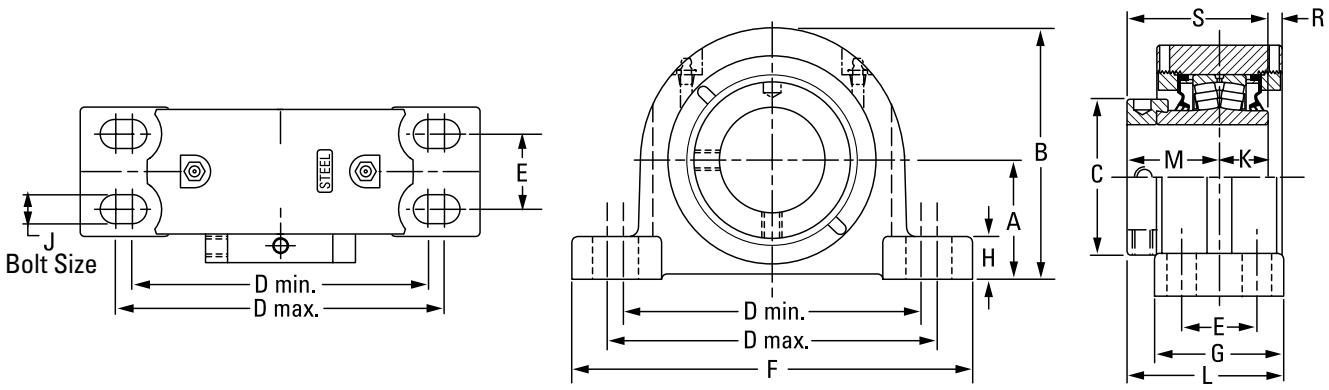

Bearing Part No.	Shaft Dia.	Bearing No.	A	B	C	D min.	D max.	E	F	G	H	J	K	L	M	R	S	Wt.
	mm in.		**mm** in.	**mm** in.	**mm** in.	**mm** in.	**mm** in.	**mm** in.	**mm** in.	**mm** in.	**mm** in.	**mm** in..	**mm** in.	**mm** in.	**mm** in.	**mm** in.	**mm** in.	**kg** lbs.
QMPF10J115S	1 15/16 in.	22210	**57.2** 2.25	**120.3** 4.74	**70.0** 2.76	**153.9** 6.06	**163.6** 6.44	**40.4** 1.59	**203.2** 8.00	**76.2** 3.00	**24.9** 0.98	**12** 1/2	**25.4** 1.00	**85.6** 3.37	**47.5** 1.87	**5.5** 0.22	**72.9** 2.87	**6.7** 14.7
QMPF10J200S	2 in.																	
QMPF10J050S	**50 mm**																	
QMPF13J060S	**60 mm**	22213	**69.9** 2.75	**147.3** 5.80	**91.9** 3.62	**174.8** 6.88	**193.8** 7.63	**44.5** 1.75	**235.0** 9.25	**76.2** 3.00	**24.9** 0.98	**16** 5/8	**31.5** 1.24	**92.2** 3.63	**54.1** 2.13	**5.3** 0.21	**85.6** 3.37	**9.1** 20
QMPF13J207S	2 7/16 in.																	
QMPF13J208S	2 1/2 in.																	
QMPF13J065S	**65 mm**																	
QMPF15J211S	2 11/16 in.	22215	**82.6** 3.25	**167.6** 6.60	**101.9** 4.01	**193.0** 7.60	**231.1** 9.10	**47.8** 1.88	**265.2** 10.44	**79.5** 3.13	**32.8** 1.29	**16** 5/8	**31.8** 1.25	**99.8** 3.93	**60.2** 2.37	**6.1** 0.24	**91.9** 3.62	**12.2** 27
QMPF15J212S	2 3/4 in.																	
QMPF15J070S	**70 mm**																	
QMPF15J215S	2 15/16 in.																	
QMPF15J300S	3 in.																	
QMPF15J075S	**75 mm**																	
QMPF18J303S	3 3/16 in.	22218	**95.3** 3.75	**195.3** 7.69	**120.9** 4.76	**225.6** 8.88	**276.4** 10.88	**50.8** 2.00	**312.4** 12.30	**95.3** 3.75	**39.6** 1.56	**20** 3/4	**36.6** 1.44	**113.3** 4.46	**65.8** 2.59	**8.1** 0.32	**102.4** 4.03	**22.2** 49
QMPF18J304S	3 1/4 in.																	
QMPF18J080S	**80 mm**																	
QMPF18J085S	**85 mm**																	
QMPF18J307S	3 7/16 in.																	
QMPF18J308S	3 1/2 in.																	
QMPF18J090S	**90 mm**																	
QMPF20J311S	3 11/16 in.	22220	**108.0** 4.25	**223.0** 8.78	**152.4** 6.00	**276.4** 10.88	**339.9** 13.38	**57.2** 2.25	**378.0** 14.88	**109.5** 4.31	**35.6** 1.40	**20** 3/4	**41.4** 1.63	**130.3** 5.13	**75.2** 2.96	**9.1** 0.36	**116.6** 4.59	**30.4** 67
QMPF20J312S	3 3/4 in.																	
QMPF20J315S	3 15/16 in.																	
QMPF20J400S	4 in.																	
QMPF20J100S	**100 mm**																	
QMPF22J110S	**110 mm**	22222	**120.7** 4.75	**233.4** 9.19	**160.0** 6.30	**301.8** 11.88	**368.3** 14.50	**63.5** 2.50	**409.7** 16.13	**120.7** 4.75	**40.1** 1.58	**20** 3/4	**46.5** 1.83	**154.4** 6.08	**94.0** 3.70	**4.3** 0.17	**140.5** 5.53	**37.2** 82
QMPF22J407S	4 7/16 in.																	
QMPF22J408S	4 1/2 in.																	
QMPF22J115S	**115 mm**																	
QMPF26J125S	**125 mm**	22226	**139.7** 5.50	**279.7** 11.01	**175.0** 6.89	**349.3** 13.75	**403.4** 15.88	**69.9** 2.75	**444.5** 17.5	**128.0** 5.04	**39.1** 1.54	**24** 7/8	**58.7** 2.31	**158.8** 6.25	**94.7** 3.73	**-0.8** -0.03	**153.4** 6.04	**60.8** 134
QMPF26J415S	4 15/16 in.																	
QMPF26J500S	5 in.																	
QMPF26J130S	**130 mm**																	
QMPF30J507S	5 7/16 in.	23230	**169.9** 6.69	**330.2** 13.00	**205.0** 8.07	**441.5** 17.38	**485.9** 19.13	**95.3** 3.75	**558.8** 22.00	**171.5** 6.75	**76.2** 3.00	**24** 1	**75.9** 2.99	**201.7** 7.94	**116.1** 4.57	**6.6** 0.26	**192.0** 7.56	**113.4** 250
QMPF30J508S	5 1/2 in.																	
QMPF30J140S	**140 mm**																	
QMPF30J515S	5 15/16 in.																	
QMPF30J600S	6 in.																	
QMPF30J150S	**150 mm**																	
QMPF34J607S	6 7/16 in.	23234	**190.5** 7.50	**390.7** 15.38	**235.0** 9.25	**530.4** 20.88	**600.2** 23.63	**117.5** 4.625	**660.4** 26.00	**190.5** 7.50	**63.5** 2.50	**24** 1	**85.1** 3.35	**224.3** 8.83	**129.0** 5.08	**5.6** 0.22	**214.1** 8.43	**170.1** 375
QMPF34J608S	6 1/2 in.																	
QMPF34J170S	**170 mm**																	
QMPF34J615S	6 15/16 in.																	
QMPF34J700S	7 in.																	
QMPF34J180S	**180 mm**																	

QMPR FOUR-BOLT PILLOW BLOCKS

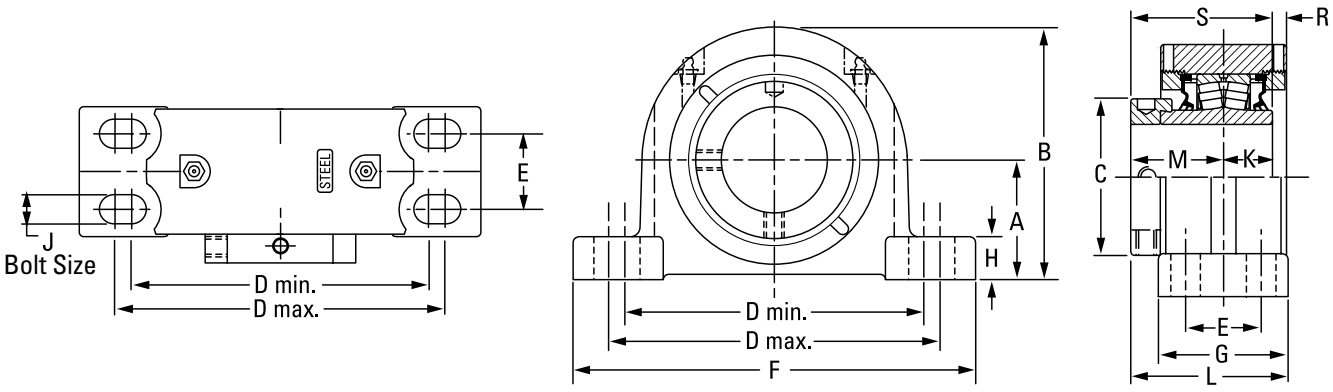

Bearing Part No.	Shaft Dia.	Bearing No.	A	B	C	D min.	D max.	E	F	G	H	J	K	L	M	R	S	Wt.
	mm in.		**mm** in.	**mm** in.	**mm** in.	**mm** in.	**mm** in.	**mm** in.	**mm** in.	**mm** in.	**mm** in.	**mm** in.	**mm** in.	**mm** in.	**mm** in.	**mm** in.	**mm** in.	**kg** lbs.
QMPR13J060S	**60 mm**	22213	**69.9** 2.75	**147.3** 5.80	**91.9** 3.62	**181.1** 7.13	**222.3** 8.75	**47.8** 1.88	**260.4** 10.25	**82.6** 3.25	**24.9** 0.98	**16** 5/8	**31.5** 1.24	**95.5** 3.76	**54.1** 2.13	**5.3** 0.21	**85.6** 3.37	**9.1** 20
QMPR13J207S	2 7/16 in.																	
QMPR13J208S	2 1/2 in.																	
QMPR13J065S	**65 mm**																	
QMPR15J211S	2 11/16 in.	22215	**79.5** 3.13	**164.3** 6.47	**101.9** 4.01	**203.2** 8.00	**243.8** 9.60	**54.1** 2.13	**275.1** 10.83	**85.9** 3.38	**29.5** 1.16	**16** 5/8	**31.8** 1.25	**103.1** 4.06	**60.2** 2.37	**6.1** 0.24	**91.9** 3.62	**12.2** 27
QMPR15J212S	2 3/4 in.																	
QMPR15J070S	**70 mm**																	
QMPR15J215S	2 15/16 in.																	
QMPR15J300S	3 in.																	
QMPR15J075S	**75 mm**																	
QMPR18J303S	3 3/16 in.	22218	**95.3** 3.75	**195.3** 7.69	**120.9** 4.76	**235.0** 9.25	**285.8** 11.25	**60.5** 2.38	**346.2** 13.63	**95.3** 3.75	**39.6** 1.56	**20** 3/4	**36.6** 1.44	**113.3** 4.46	**65.8** 2.59	**8.1** 0.32	**102.4** 4.03	**22.2** 49
QMPR18J304S	3 1/4 in.																	
QMPR18J080S	**80 mm**																	
QMPR18J085S	**85 mm**																	
QMPR18J307S	3 7/16 in.																	
QMPR18J308S	3 1/2 in.																	
QMPR18J090S	**90 mm**																	
QMPR20J311S	3 11/16 in.	22220	**108.0** 4.25	**223.0** 8.78	**152.4** 6.00	**276.4** 10.88	**339.9** 13.38	**57.2** 2.25	**378.0** 14.88	**109.5** 4.31	**35.6** 1.40	**20** 3/4	**41.4** 1.63	**130.3** 5.13	**75.2** 2.96	**8.9** 0.35	**116.7** 4.59	**30.4** 69
QMPR20J312S	3 3/4 in.																	
QMPR20J315S	3 15/16 in.																	
QMPR20J400S	4 in.																	
QMPR20J100S	**100 mm**																	
QMPR22J110S	**110 mm**	22222	**120.7** 4.75	**233.4** 9.19	**160.0** 6.30	**301.8** 11.88	**368.3** 14.50	**63.5** 2.50	**409.7** 16.13	**120.7** 4.75	**40.1** 1.58	**20** 3/4	**46.5** 1.83	**154.4** 6.08	**94.0** 3.70	**4.3** 0.17	**140.5** 5.53	**37.2** 82
QMPR22J407S	4 7/16 in.																	
QMPR22J408S	4 1/2 in.																	
QMPR22J115S	**115 mm**																	
QMPR26J125S	**125 mm**	22226	**139.7** 5.50	**179.7** 11.014	**175.0** 6.89	**330.2** 13.00	**403.4** 15.88	**71.4** 2.81	**444.5** 17.50	**128.0** 5.04	**39.1** 1.54	**24** 7/8	**58.7** 2.31	**158.5** 6.24	**94.5** 3.72	**-1.0** -0.04	**153.2** 6.03	**60.8** 134
QMPR26J415S	4 15/16 in.																	
QMPR26J500S	5 in.																	
QMPR26J130S	**130 mm**																	

QMPH AND QMPG FOUR-BOLT PILLOW BLOCKS

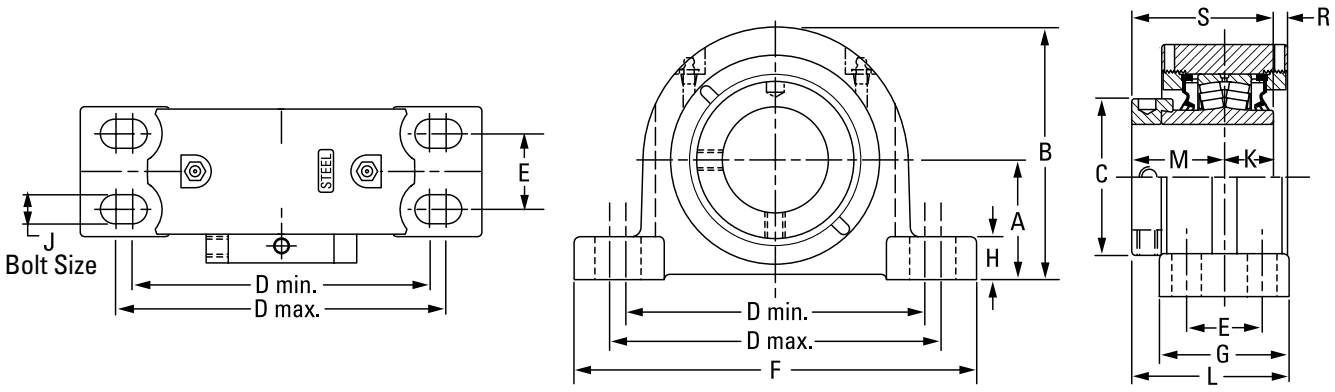

QMPH SAF STYLE FOUR-BOLT PILLOW BLOCK DIMENSIONS

Bearing Part No.	Shaft Dia.	Bearing No.	A	B	C	D min.	D max.	E	F	G	H	J	K	L	M	R	S	Wt.
	mm in.		**mm** in.	**mm** in.	**mm** in.	**mm** in.	**mm** in.	**mm** in.	**mm** in.	**mm** in.	**mm** in.	**mm** in.	**mm** in.	**mm** in.	**mm** in.	**mm** in.	**mm** in.	**kg** lbs.
QMPH26J125S	**125 mm**	22226	**152.4** 6.00	**290.8** 11.45	**175** 6.89	**406.4** 16.00	**435.1** 17.13	**85.9** 3.38	**500.4** 19.70	**128** 5.04	**51.8** 2.04	**24** 1	**58.7** 2.31	**158.5** 6.24	**94.5** 3.72	**-0.7** -0.03	**153.4** 6.04	**60.8** 134
QMPH26J415S	4 15/16 in.																	
QMPH26J500S	5 in.																	
QMPH26J130S	**130 mm**																	
QMPH30J507S	5 7/16 in.	23230	**169.9** 6.69	**330.7** 13.02	**205.0** 8.07	**441.5** 17.38	**485.9** 19.13	**95.3** 3.75	**558.8** 22.00	**171.5** 6.75	**76.2** 3.00	**24** 1	**75.9** 2.99	**199.1** 7.84	**116.1** 4.57	**5.1** 0.20	**192.0** 7.56	**118.8** 262
QMPH30J508S	5 1/2 in.																	
QMPH30J140S	**140 mm**																	
QMPH30J515S	5 15/16 in.	23230	**179.4** 7.06	**339.9** 13.38	**205.0** 8.07	**492.3** 19.38	**549.4** 21.63	**108.0** 4.25	**628.7** 24.75	**171.5** 6.75	**85.9** 3.38	**24** 1	**75.9** 2.99	**201.7** 7.94	**116.1** 4.57	**6.6** 0.26	**192.0** 7.56	**122.9** 271
QMPH30J600S	6 in.																	
QMPH30J150S	**150 mm**																	
QMPH34J607S	6 7/16 in.	23234	**190.5** 7.50	**390.7** 15.38	**235.0** 9.25	**530.4** 20.88	**600.2** 23.63	**117.5** 4.63	**711.2** 28.00	**190.5** 7.50	**63.5** 2.50	**24** 1	**85.1** 3.35	**224.3** 8.83	**129.0** 5.08	**5.6** 0.22	**214.1** 8.43	**170.1** 375
QMPH34J608S	6 1/2 in.																	
QMPH34J170S	**170 mm**																	
QMPH34J615S	6 15/16 in.	23234	**200.0** 7.88	**400.1** 15.75	**235.0** 9.25	**549.4** 21.63	**619.3** 24.38	**112.7** 4.44	**711.2** 28.00	**190.5** 7.50	**73.2** 2.88	**30** 1 1/4	**85.1** 3.35	**224.3** 8.83	**129.0** 5.08	**5.6** 0.22	**214.1** 8.43	**178.3** 393
QMPH34J700S	7 in.																	
QMPH34J180S	**180 mm**																	

QMPG SN STYLE FOUR-BOLT PILLOW BLOCK DIMENSIONS

Bearing Part No.	Shaft Dia.	Bearing No.	A	B	C	D min.	D max.	E	F	G	H	J	K	L	M	R	S	Wt.
	mm in.		**mm** in.	**mm** in.	**mm** in.	**mm** in.	**mm** in.	**mm** in.	**mm** in.	**mm** in.	**mm** in.	**mm** in.	**mm** in.	**mm** in.	**mm** in.	**mm** in.	**mm** in.	**kg** lbs.
QMPG26J125S	**125 mm**	22226	**150.0** 5.91	**288.4** 11.36	**175.0** 6.89	**383.4** 15.09	**448.5** 17.66	**80.0** 3.15	**500.1** 19.69	**128** 5.04	**49.3** 1.94	**24** 1	**58.7** 2.31	**158.5** 6.24	**94.5** 3.72	**-6.9** -0.27	**153.4** 6.04	**60.8** 134
QMPG26J415S	4 15/16 in.																	
QMPG26J500S	5 in.																	
QMPG26J130S	**130 mm**																	
QMPG30J507S	5 7/16 in.	23230	**170.0** 6.69	**332.2** 13.08	**205.0** 8.07	**438.2** 17.25	**482.6** 19.00	**89.9** 3.54	**547.6** 21.65	**171.5** 6.75	**76.2** 3.00	**24** 1	**75.9** 2.99	**198.6** 7.82	**116.1** 4.57	**9.7** 0.38	**192.0** 7.56	**113.4** 250
QMPG30J508S	5 1/2 in.																	
QMPG30J140S	**140 mm**																	
QMPG30J515S	5 15/16 in.																	
QMPG30J600S	6 in.																	
QMPG30J150S	**150 mm**																	
QMPG34J607S	6 7/16 in.	23234	**190.5** 7.50	**390.7** 15.38	**235.0** 9.25	**530.4** 20.88	**600.2** 23.63	**117.5** 4.63	**711.2** 28.00	**190.5** 7.50	**63.5** 2.50	**24** 1	**85.1** 3.35	**224.3** 8.83	**129.0** 5.08	**5.6** 0.22	**214.1** 8.43	**178.3** 393
QMPG34J608S	6 1/2 in.																	
QMPG34J170S	**170 mm**																	
QMPG34J615S	6 15/16 in.	23234	**200.0** 7.88	**400.1** 15.75	**235.0** 9.25	**549.4** 21.63	**619.3** 24.38	**114.3** 4.50	**711.2** 28.00	**190.5** 7.50	**73.2** 2.88	**30** 1 1/4	**85.1** 3.35	**224.3** 8.83	**129.0** 5.08	**5.6** 0.22	**214.1** 8.43	**170.1** 375
QMPG34J700S	7 in.																	
QMPG34J180S	**180 mm**																	

QMPX 5000 SERIES FOUR-BOLT PILLOW BLOCKS

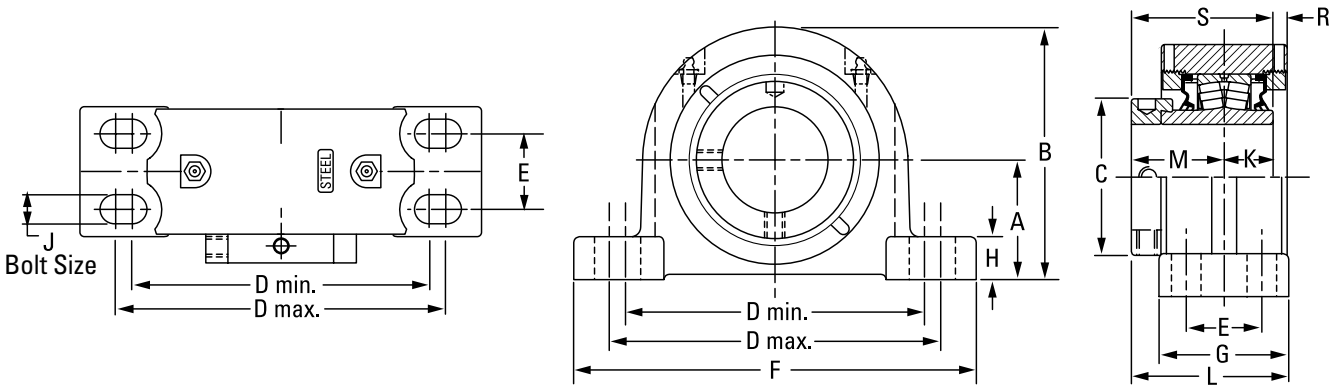

Bearing Part No.	Shaft Dia.	Bearing No.	A	B	C	D min.	D max.	E	F	G	H	J	K	L	M	R	S	Wt.
	mm in.		**mm** in.	**mm** in.	**mm** in.	**mm** in.	**mm** in.	**mm** in.	**mm** in.	**mm** in.	**mm** in.	**mm** in.	**mm** in.	**mm** in.	**mm** in.	**mm** in.	**mm** in.	**kg** lbs.
QMPX13J060S	**60 mm**	22213	**76.2** 3.00	**153.7** 6.05	**91.9** 3.62	**176.3** 6.94	**242.8** 9.56	**66.8** 2.63	**285.8** 11.25	**98.6** 3.88	**31.2** 1.23	**16** 5/8	**31.5** 1.24	**103.4** 4.07	**54.1** 2.13	**5.3** 0.21	**85.6** 3.37	**10.4** 23
QMPX13J207S	2 7/16 in.																	
QMPX13J208S	2 1/2 in.																	
QMPX13J065S	**65 mm**																	
QMPX15J211S	2 11/16 in.	22215	**88.9** 3.50	**173.5** 6.83	**101.9** 4.01	**230.1** 9.06	**265.2** 10.44	**68.9** 2.75	**330.2** 13.00	**108.0** 4.25	**39.1** 1.54	**20** 3/4	**31.8** 1.25	**114.3** 4.50	**60.2** 2.37	**7.1** 0.28	**91.9** 3.62	**12.7** 28
QMPX15J212S	2 3/4 in.																	
QMPX15J070S	**70 mm**																	
QMPX15J215S	2 15/16 in.																	
QMPX15J300S	3 in.																	
QMPX15J075S	**75 mm**																	
QMPX18J303S	3 3/16 in.	22218	**101.6** 4.00	**201.2** 7.92	**120.9** 4.76	**274.6** 10.81	**309.6** 12.19	**76.2** 3.00	**381.0** 15.00	**120.7** 4.75	**38.1** 1.50	**20** 3/4	**36.6** 1.44	**126.0** 4.96	**65.8** 2.59	**8.1** 0.32	**102.4** 4.03	**22.2** 49
QMPX18J304S	3 1/4 in.																	
QMPX18J080S	**80 mm**																	
QMPX18J085S	**85 mm**																	
QMPX18J307S	3 7/16 in.																	
QMPX18J308S	3 1/2 in.																	
QMPX18J090S	**90 mm**																	
QMPX20J311S	3 11/16 in.	22220	**127.0** 5.00	**239.8** 9.44	**152.4** 6.00	**317.5** 12.50	**355.6** 14.00	**88.9** 3.50	**425.5** 16.75	**139.7** 5.50	**41.4** 1.63	**24** 7/8	**41.4** 1.63	**145.3** 5.72	**75.2** 2.96	**8.6** 0.34	**116.6** 4.59	**30.4** 67
QMPX20J312S	3 3/4 in.																	
QMPX20J315S	3 15/16 in.																	
QMPX20J400S	4 in.																	
QMPX20J100S	**100 mm**																	
QMPX22J110S	**110 mm**	22222	**146.1** 5.75	**273.8** 10.78	**160.0** 6.30	**354.1** 13.94	**395.2** 15.56	**101.6** 4.00	**469.9** 18.50	**158.8** 6.25	**45.7** 1.80	**24** 1	**46.5** 1.83	**171.2** 6.74	**94.0** 3.70	**2.3** 0.09	**140.5** 5.53	**37.2** 82
QMPX22J407S	4 7/16 in.																	
QMPX22J408S	4 1/2 in.																	
QMPX22J115S	**115 mm**																	

(1)No gussets on outside housing.

Continued on next page.

QMPX 5000 SERIES FOUR-BOLT PILLOW BLOCKS – *continued*

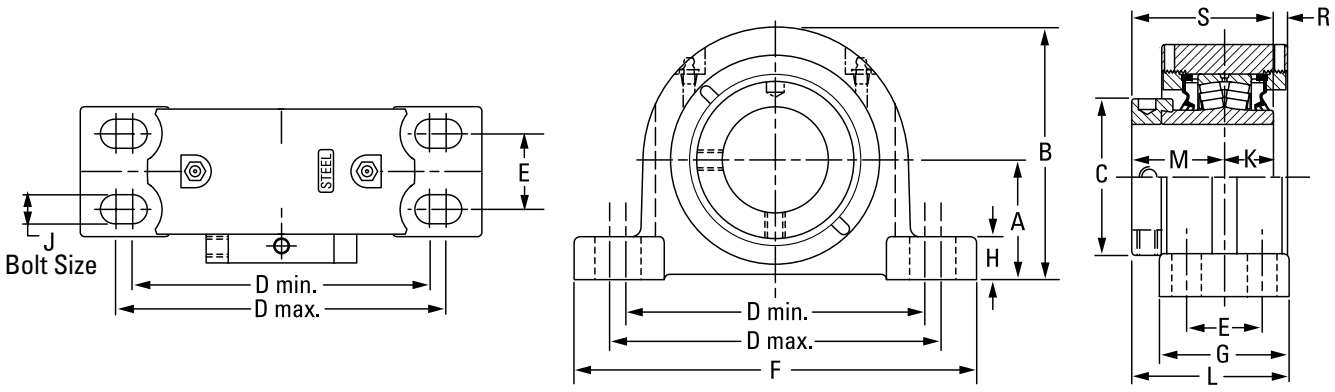

Continued from previous page.

Bearing Part No.	Shaft Dia.	Bearing No.	A	B	C	D min.	D max.	E	F	G	H	J	K	L	M	R	S	Wt.
	mm in.		**mm** in.	**mm** in.	**mm** in.	**mm** in.	**mm** in.	**mm** in.	**mm** in.	**mm** in.	**mm** in.	**mm** in.	**mm** in.	**mm** in.	**mm** in.	**mm** in.	**mm** in.	**kg** lbs.
QMPX26J125S	**125 mm**	22226	**155.6** 6.13	**283.2** 11.15	**175.0** 6.89	**387.4** 15.25	**425.5** 16.75	**108.0** 4.25	**514.4** 20.25	**171.5** 6.75	**50.8** 2.00	**24** 1 1/8	**58.7** 2.31	**180.3** 7.10	**94.5** 3.72	**-1.5** -0.06	**153.4** 6.04	**60.8** 134
QMPX26J415S	4 15/16 in.																	
QMPX26J500S	5 in.																	
QMPX26J130S	**130 mm**																	
QMPX30J507S	5 7/16 in.	23230	**169.9** 6.69	**330.2** 13.00	**205.0** 8.07	**439.9** 17.32	**485.8** 19.125	**93.5** 3.68	**558.8** 22.00	**171.5** 6.75	**76.2** 3.00	**24** 1 1/8	**75.9** 2.99	**201.7** 7.94	**116.1** 4.57	**6.6** 0.26	**192.0** 7.56	**113.4** 250
QMPX30J508S	5 1/2 in.																	
QMPX30J140S	**140 mm**																	
QMPX30J515S[1]	5 15/16 in.	23230	**179.4** 7.06	**339.9** 13.38	**205.0** 8.07	**489.0** 19.25	**552.5** 21.75	**106.4** 4.19	**625.7** 24.75	**171.5** 6.75	**85.6** 3.37	**24** 1 1/8	**75.9** 2.99	**196.9** 7.75	**116.1** 4.57	**4.8** 0.19	**192.0** 7.56	**120.2** 265
QMPX30J600S[1]	6 in.																	
QMPX30J150S[1]	**150 mm**																	
QMPX34J607S[1]	6 7/16 in.	23234	**200.0** 7.88	**400.1** 15.75	**235.0** 9.25	**549.4** 21.63	**619.3** 24.38	**112.8** 4.44	**711.2** 28.00	**190.5** 7.50	**73.2** 2.88	**30** 1 1/4	**80.1** 3.35	**224.3** 8.83	**129.0** 5.08	**5.6** 0.22	**214.1** 8.43	**179.2** 395
QMPX34J608S[1]	6 1/2 in.																	
QMPX34J170S[1]	**170 mm**																	
QMPX34J615S[1]	6 15/16 in.																	
QMPX34J700S[1]	7 in.																	
QMPX34J180S[1]	**180 mm**																	

[1]No gussets on outside housing.

QMPXT 5000 SERIES TWO-BOLT PILLOW BLOCKS

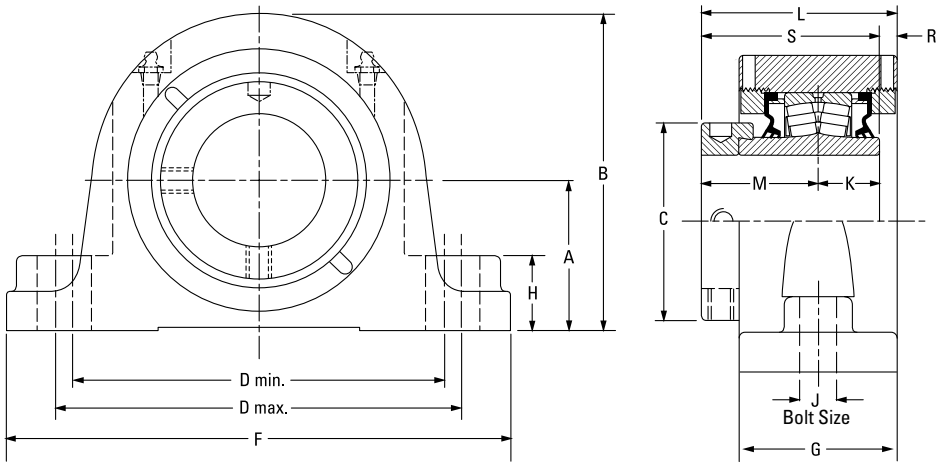

Bearing Part No.	Shaft Dia.	Bearing No.	A	B	C	D min.	D max.	F	G	H	J	K	L	M	R	S	Wt.
	mm in.		**mm** in.	**mm** in.	**mm** in.	**mm** in.	**mm** in.	**mm** in.	**mm** in.	**mm** in.	**mm** in.	**mm** in.	**mm** in.	**mm** in.	**mm** in.	**mm** in.	**kg** lbs.
QMPXT13J060S	**60 mm**	22213	**76.2** 3.00	**153.7** 6.05	**91.9** 3.62	**194.6** 7.66	**223.0** 8.78	**285.8** 11.25	**73.7** 2.90	**35.1** 1.38	**20** 3/4	**31.5** 1.24	**91.4** 3.60	**54.1** 2.13	**5.3** 0.21	**85.6** 3.37	**10.0** 22
QMPXT13J207S	2 7/16 in.																
QMPXT13J208S	2 1/2 in.																
QMPXT13J065S	**65 mm**																
QMPXT15J211S	2 11/16 in.	22215	**88.9** 3.50	**173.7** 6.84	**101.9** 4.01	**230.1** 9.06	**265.2** 10.44	**330.2** 13.00	**75.7** 2.98	**35.1** 1.38	**24** 7/8	**31.8** 1.25	**98.0** 3.86	**60.2** 2.37	**6.1** 0.24	**91.9** 3.62	**12.7** 28
QMPXT15J212S	2 3/4 in.																
QMPXT15J070S	**70 mm**																
QMPXT15J215S	2 15/16 in.																
QMPXT15J300S	3 in.																
QMPXT15J075S	**75 mm**																

QMSN SN-STYLE TWO-BOLT PILLOW BLOCKS – PURE METRIC DESIGN

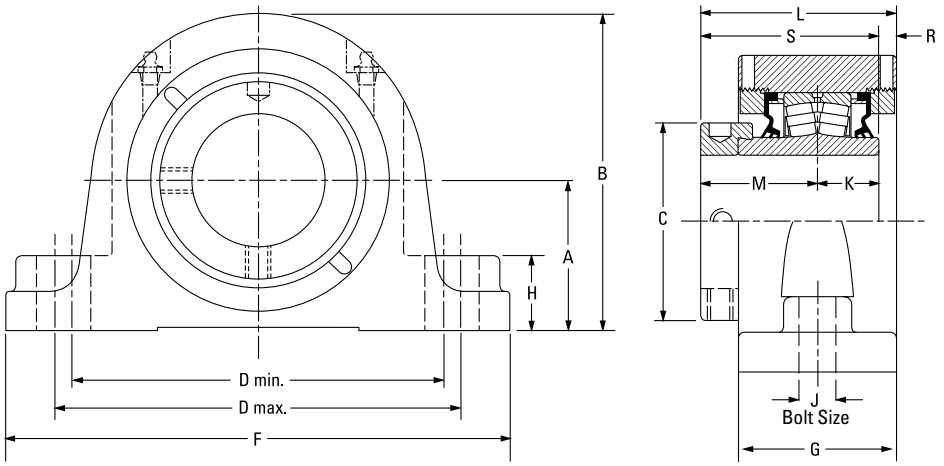

Bearing Part No.	Shaft Dia.	Bearing No.	A	B	C	D min.	D max.	F	G	H	J	K	L	M	R	S	Wt.
	mm in.		**mm** in.	**mm** in.	**mm** in.	**mm** in.	**mm** in.	**mm** in.	**mm** in.	**mm** in.	**mm** in.	**mm** in.	**mm** in.	**mm** in.	**mm** in.	**mm** in.	**kg** lbs.
QMSN08J035S	**35 mm**	22208	**60** 2.36	**111** 4.37	**60.5** 2.38	**159** 6.26	**175** 6.89	**205** 8.07	**62** 2.44	**35** 1.38	**12** 1/2	**25** 1.00	**75** 2.95	**44** 1.75	**5** 0.20	**70** 2.75	**10.5** 23
QMSN08J107S	1 7/16 in.																
QMSN08J108S	1 1/2 in.																
QMSN09J040S	**40 mm**	22209	**60** 2.36	**111** 4.37	**67** 2.64	**159** 6.26	**175** 6.89	**205** 8.07	**62** 2.44	**35** 1.38	**12** 1/2	**25** 0.98	**79** 3.11	**48** 1.89	**6** 0.24	**73** 2.87	**10.5** 23
QMSN09J111S	1 11/16 in.																
QMSN09J112S	1 3/4 in.																
QMSN09J045S	**45 mm**																
QMSN10J115S	1 15/16 in.	22210	**70** 2.76	**136** 5.35	**70** 2.76	**183** 7.20	**216** 8.50	**254** 10.00	**68** 2.68	**25** 0.98	**16** 5/8	**25** 0.98	**82** 3.23	**48** 1.89	**9** 0.35	**73** 2.87	**12.7** 28
QMSN10J200S	2 in.																
QMSN10J050S	**50 mm**																
QMSN11J203S	2 3/16 in.	22211	**70** 2.76	**141** 5.55	**76** 2.99	**183** 7.20	**216** 8.50	**254** 10.00	**68** 2.68	**25** 0.98	**16** 5/8	**29** 1.14	**85** 3.35	**51** 2.01	**6** 0.24	**80** 3.15	**13.2** 29
QMSN11J204S	2 1/4 in.																
QMSN11J055S	**55 mm**																
QMSN13J060S	**60 mm**	22213	**80** 3.15	**157** 6.18	**92** 3.62	**196** 7.72	**235** 9.25	**275** 10.83	**74** 2.91	**35** 1.38	**16** 5/8	**31** 1.22	**91** 3.58	**55** 2.17	**5** 0.20	**86** 3.39	**15.9** 35
QMSN13J207S	2 7/16 in.																
QMSN13J208S	2 1/2 in.																
QMSN13J065S	**65 mm**																
QMSN15J211S	2 11/16 in.	22215	**95** 3.74	**183** 7.20	**102** 4.02	**241** 9.49	**279** 10.98	**316** 12.44	**76** 2.99	**34** 1.34	**20** 3/4	**32** 1.26	**98** 3.86	**60** 2.36	**6** 0.24	**92** 3.62	**20.9** 46
QMSN15J212S	2 3/4 in.																
QMSN15J070S	**70 mm**																
QMSN15J215S	2 15/16 in.																
QMSN15J300S	3 in.																
QMSN15J075S	**75 mm**																
QMSN18J303S	3 3/16 in.	22218	**100** 3.94	**200** 7.87	**121** 4.76	**279** 10.98	**292** 11.50	**345** 13.58	**86** 3.39	**39** 1.54	**20** 3/4	**37** 1.46	**109** 4.29	**66** 2.60	**7** 0.28	**103** 4.06	**25.5** 56
QMSN18J304S	3 1/4 in.																
QMSN18J080S	**80 mm**																

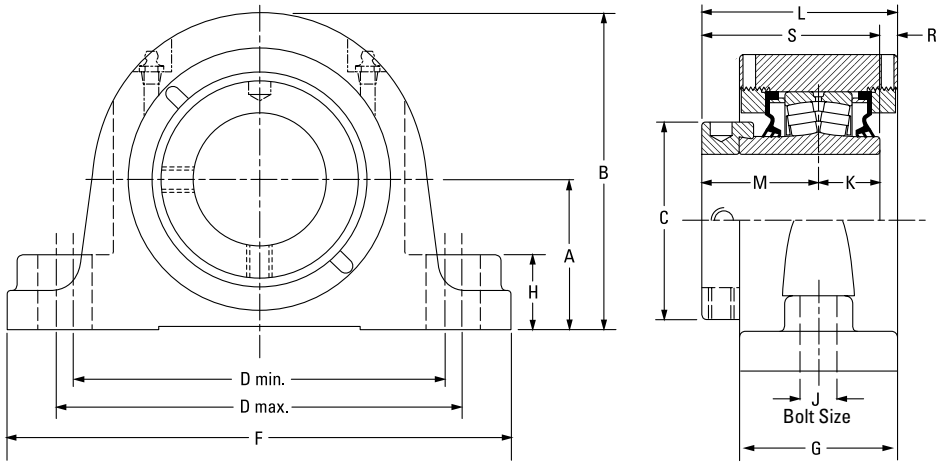

Bearing Part No.	Shaft Dia.	Bearing No.	A	B	C	D min.	D max.	F	G	H	J	K	L	M	R	S	Wt.
	mm in.		**mm** in.	**mm** in.	**mm** in.	**mm** in.	**mm** in.	**mm** in.	**mm** in.	**mm** in.	**mm** in.	**mm** in.	**mm** in.	**mm** in.	**mm** in.	**mm** in.	**kg** lbs.
QMSN18J085S	**85 mm**	22218	**112** 4.41	**212** 8.35	**121** 4.76	**280** 11.02	**292** 11.50	**345** 13.58	**86** 3.38	**39** 1.53	**20** 3/4	**37** 1.46	**109** 4.29	**66** 2.60	**7** 0.28	**103** 4.06	**25.5** 56
QMSN18J307S	3 7/16 in.	22218	**112** 4.41	**212** 8.35	**121** 4.76	**290** 11.42	**327** 12.87	**380** 14.96	**86** 3.38	**39** 1.53	**24** 7/8	**37** 1.46	**109** 4.29	**66** 2.60	**7** 0.28	**103** 4.06	**25.5** 56
QMSN18J308S	3 1/2 in.																
QMSN18J090S	**90 mm**																
QMSN20J311S	3 11/16 in.	22220	**125** 4.92	**241** 9.48	**152** 5.98	**319** 12.58	**366** 14.42	**410** 16.14	**101** 3.96	**50** 1.98	**24** 7/8	**41** 1.61	**126** 4.96	**75** 2.95	**9** 0.35	**116** 4.57	**35.9** 79
QMSN20J312S	3 3/4 in.																
QMSN20J315S	3 15/16 in.																
QMSN20J400S	4 in.																
QMSN20J100S	**100 mm**																
QMSN22J110S	**110 mm**	22222	**140** 5.51	**255** 10.04	**160** 6.30	**332** 13.08	**365** 14.37	**410** 16.14	**105** 4.15	**39** 1.53	**24** 7/8	**47** 1.85	**147** 5.79	**94** 3.70	**6** 0.24	**141** 5.55	**35.9** 79
QMSN22J407S	4 7/16 in.	22222	**150** 5.91	**265** 10.43	**160** 6.30	**367** 14.45	**400** 15.75	**445** 17.52	**105** 4.13	**49** 1.93	**24** 7/8	**47** 1.85	**147** 5.79	**94** 3.70	**6** 0.24	**141** 5.55	**35.5** 78
QMSN22J408S	4 1/2 in.																
QMSN22J115S	**115 mm**																
QMSN26J125S	**125 mm**	22226	**150** 5.91	**282** 11.10	**175** 6.89	**402** 15.83	**435** 17.13	**500** 19.69	**113** 4.45	**49** 1.93	**30** 1 1/4	**58** 2.28	**151** 5.94	**95** 3.74	**2** 0.08	**153** 6.02	**40.0** 88
QMSN26J415S	4 15/16 in.																
QMSN26J500S	5 in.																
QMSN26J130S	**130 mm**																
QMSN30J507S	5 7/16 in.	23230	**170** 6.69	**330** 13.01	**205** 8.07	**461** 18.15	**479** 18.86	**550** 21.65	**171** 6.75	**76** 3.01	**30** 1 1/4	**76** 2.99	**202** 7.94	**116** 4.57	**7** 0.26	**192** 7.56	**136.4** 300
QMSN30J508S	5 1/2 in.																
QMSN30J140S	**140 mm**																
QMSN30J515S	5 15/16 in.																
QMSN30J600S	6 in.																
QMSN30J150S	**150 mm**																

QMC PILOTED FLANGE CARTRIDGES

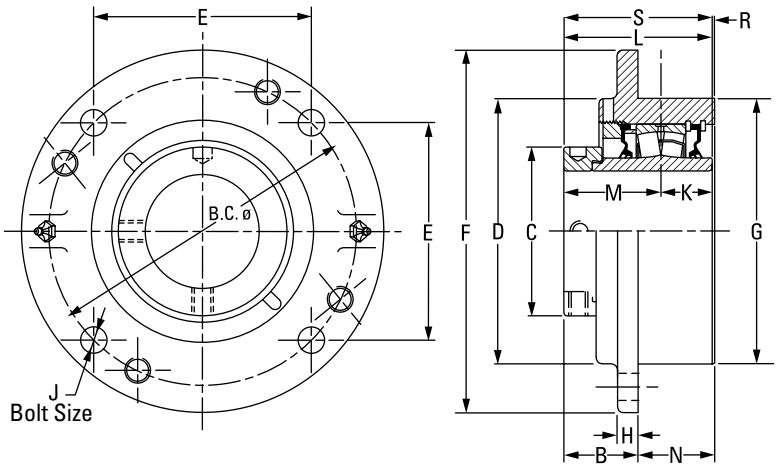

Bearing Part No.	Shaft Dia.	Bearing No.	B FIX	B EXP	B.C.	C	D	E	F	G[1]	H	J	K	L FIX	L EXP	M	N	R	S	Wt.
	mm in.		**mm** in.	**mm** in.	**mm** in.	**mm** in.	**mm** in.	**mm** in.	**mm** in.	**mm** in.	**mm** in.	**mm** in.	**mm** in.	**mm** in.	**mm** in.	**mm** in.	**mm** in.	**mm** in.	**mm** in.	**kg** lbs.
QMC08J035S	**35 mm**	22208	**49.8** 1.96	**51.8** 2.04	**111.3** 4.38	**60.5** 2.38	**92.2** 3.63	**78.5** 3.09	**133.4** 5.25	**92.1** 3.625	**12.7** 0.50	**10** 7/16	**25.4** 1.00	**73.7** 2.90	**75.7** 2.98	**44.5** 1.75	**23.9** 0.94	**3.81** 0.15	**69.9** 2.75	**3.6** 8
QMC08J107S	1 7/16 in.																			
QMC08J108S	1 ½ in.																			
QMC09J040S	**40 mm**	22209	**54.6** 2.15	**56.6** 2.23	**130.3** 5.13	**66.8** 2.63	**111.3** 4.38	**91.9** 3.62	**155.7** 6.13	**108.0** 4.250	**12.7** 0.50	**10** 7/16	**25.4** 1.00	**77.0** 3.03	**79.0** 3.11	**47.5** 1.87	**22.4** 0.88	**3.81** 0.15	**72.9** 2.87	**4.1** 9
QMC09J111S	1 11/16 in.																			
QMC09J112S	1 ¾ in.																			
QMC09J045S	**45 mm**																			
QMC10J115S	1 15/16 in.	22210	**50.4** 1.99	**52.6** 2.07	**136.7** 5.38	**70.1** 2.76	**113.5** 4.47	**96.5** 3.80	**162.1** 6.38	**114.3** 4.500	**16.0** 0.63	**10** 7/16	**25.4** 1.00	**77.5** 3.05	**79.5** 3.13	**47.5** 1.87	**26.9** 1.06	**4.6** 0.18	**72.9** 2.87	**4.5** 10
QMC10J200S	2 in.																			
QMC10J050S	**50 mm**																			
QMC11J203S	2 3/16 in.	22211	**54.4** 2.14	**56.4** 2.22	**152.4** 6.00	**75.9** 2.99	**127.0** 5.00	**107.7** 4.24	**185.4** 7.30	**127.0** 5.000	**14.7** 0.58	**12** 1/2	**28.7** 1.13	**83.1** 3.27	**85.1** 3.35	**50.5** 1.99	**28.7** 1.13	**3.6** 0.14	**79.2** 3.12	**5.9** 13
QMC11J204S	2 ¼ in.																			
QMC11J055S	**55 mm**																			
QMC13J060S	**60 mm**	22213	**59.4** 2.34	**61.5** 2.42	**165.1** 6.50	**91.9** 3.62	**139.7** 5.50	**116.8** 4.60	**193.8** 7.63	**139.7** 5.500	**17.5** 0.69	**12** 1/2	**31.5** 1.24	**87.9** 3.46	**91.2** 3.59	**54.1** 2.13	**28.7** 1.13	**2.3** 0.09	**85.6** 3.37	**7.3** 16
QMC13J207S	2 7/16 in.																			
QMC13J208S	2 ½ in.																			
QMC13J065S	**65 mm**																			
QMC15J211S	2 11/16 in.	22215	**62.5** 2.46	**64.5** 2.54	**190.5** 7.50	**101.9** 4.01	**159.2** 6.27	**134.6** 5.30	**222.3** 8.75	**161.9** 6.375	**20.6** 0.81	**16** 5/8	**31.8** 1.25	**94.5** 3.72	**96.5** 3.80	**60.2** 2.37	**31.8** 1.25	**2.3** 0.09	**91.9** 3.62	**10.0** 22
QMC15J212S	2 ¾ in.																			
QMC15J070S	**70 mm**																			
QMC15J215S	2 15/16 in.																			
QMC15J300S	3 in.																			
QMC15J075S	**75 mm**																			
QMC18J303S	3 3/16 in.	22218	**73.2** 2.88	**75.2** 2.96	**219.2** 8.63	**120.9** 4.76	**187.5** 7.38	**154.9** 6.10	**262.6** 10.34	**187.3** 7.375	**25.4** 1.00	**20** 3/4	**36.6** 1.44	**106.4** 4.19	**108.5** 4.27	**65.8** 2.59	**33.3** 1.31	**4.1** 0.16	**116.6** 4.59	**14.5** 32
QMC18J304S	3 ¼ in.																			
QMC18J080S	**80 mm**																			
QMC18J085S	**85 mm**																			
QMC18J307S	3 7/16 in.																			
QMC18J308S	3 ½ in.																			
QMC18J090S	**90 mm**																			
QMC20J311S	3 11/16 in.	22220	**72.1** 2.84	**74.2** 2.92	**238.3** 9.38	**152.4** 6.00	**206.5** 8.13	**168.4** 6.63	**276.4** 10.88	**206.4** 8.125	**25.4** 1.00	**20** 3/4	**41.4** 1.63	**126.0** 4.96	**128.0** 5.04	**75.2** 2.96	**54.1** 2.13	**9.4** 0.37	**116.6** 4.59	**19.5** 43
QMC20J312S	3 ¾ in.																			
QMC20J315S	3 15/16 in.																			
QMC20J400S	4 in.																			
QMC20J100S	**100 mm**																			
QMC22J110S[2]	**110 mm**	22222	**92.5** 3.64	**94.5** 3.72	**298.5** 11.75[2]	**160.0** 6.30	**254.0** 10.00	**149.4** 5.88[2]	**342.9** 13.50	**260.4** 10.250	**25.4** 1.00	**20** 3/4[2]	**46.5** 1.83	**140.7** 5.54	**142.7** 5.62	**94.0** 3.70	**48.3** 1.90	**0.3** 0.01	**140.5** 5.53	**32.7** 72
QMC22J407S[2]	4 7/16 in.																			
QMC22J408S[2]	4 ½ in.																			
QMC22J115S[2]	**115 mm**																			

[1] Pilot tolerance: +0/-0.05 mm (+0/-0.002 in.).
[2] Six-bolt housing.

QMCMD PILOTED FLANGE CARTRIDGES

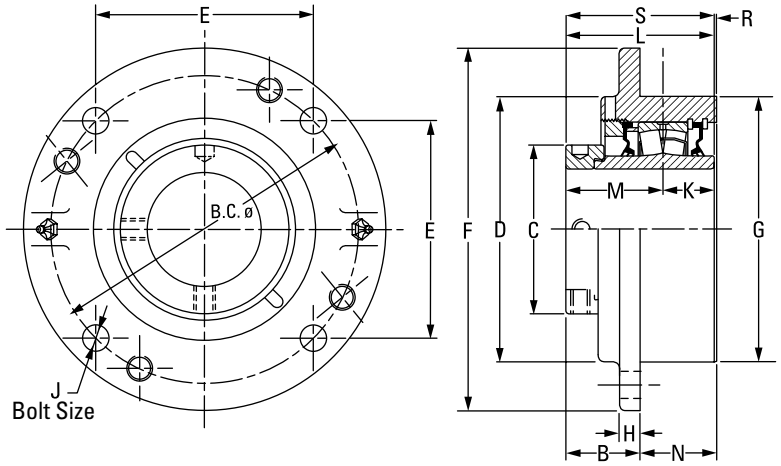

Bearing Part No.	Shaft Dia.	Bearing No.	B FIX	B EXP	B.C.	C	D	E	F	G[1]	H	J	K	L FIX	L EXP	M	N	R	S	Wt.
	mm in.		**mm** in.	**mm** in.	**mm** in.	**mm** in.	**mm** in.	**mm** in.	**mm** in.	**mm** in.	**mm** in.	**mm** in.	**mm** in.	**mm** in.	**mm** in.	**mm** in.	**mm** in.	**mm** in.	**mm** in.	**kg** lbs.
QMCMD08J035S	**35 mm**	22208	**49.8** 1.96	**51.8** 2.04	**111.3** 4.38	**60.5** 2.38	**92.2** 3.63	**78.5** 3.09	**133.4** 5.25	**92.1** 3.625	**12.7** 0.30	**10** 7/16	**25.4** 1.00	**73.7** 2.70	**75.7** 1.73	**44.5** 0.92	**23.9** 0.92	**4.06** 0.14	**69.9** 2.73	**3.6** 6
QMCMD08J107S	1 7/16 in.																			
QMCMD08J108S	1 ½ in.																			
QMCMD09J040S	**40 mm**	22209	**54.6** 2.15	**56.3** 2.23	**130.3** 5.13	**65.0** 2.56	**111.3** 4.38	**91.9** 3.62	**155.7** 6.13	**108.0** 4.250	**12.7** 0.50	**12** 1/2	**25.4** 1.00	**77.0** 3.03	**79.0** 3.11	**47.5** 1.87	**22.4** 0.88	**4.10** 0.16	**73.2** 2.88	**4.1** 9
QMCMD09J111S	1 11/16 in.																			
QMCMD09J112S	1 ¾ in.																			
QMCMD09J045S	**45 mm**																			
QMCMD10J115S	1 15/16 in.	22210	**50.1** 1.97	**52.6** 2.07	**136.7** 5.38	**70.3** 2.77	**113.5** 4.47	**96.5** 3.80	**162.1** 6.38	**114.3** 4.500	**16.0** 0.63	**12** 1/2	**25.4** 1.00	**77.5** 3.05	**79.5** 3.13	**47.5** 1.87	**26.9** 1.06	**4.6** 0.18	**72.9** 2.87	**4.5** 10
QMCMD10J200S	2 in.																			
QMCMD10J050S	**50 mm**																			
QMCMD11J203S	2 3/16 in.	22211	**54.0** 2.13	**56.4** 2.22	**152.4** 6.00	**75.3** 3.12	**127.0** 5.00	**107.7** 4.24	**185.4** 7.30	**127.0** 5.000	**14.7** 0.58	**12** 1/2	**28.7** 1.13	**82.7** 1.13	**85.1** 3.35	**50.5** 1.99	**28.7** 1.13	**3.5** 0.14	**79.2** 3.12	**5.9** 13
QMCMD11J204S	2 ¼ in.																			
QMCMD11J055S	**55 mm**																			
QMCMD13J060S	**60 mm**	22213	**60.5** 2.38	**61.5** 2.42	**165.1** 6.50	**96.8** 3.81	**139.7** 5.50	**116.8** 4.60	**193.8** 7.63	**139.7** 5.500	**17.5** 0.69	**12** 1/2	**31.5** 1.24	**88.9** 3.50	**91.2** 3.59	**54.1** 2.13	**28.7** 1.13	**2.3** 0.09	**85.6** 3.37	**7.3** 16
QMCMD13J207S	2 7/16 in.																			
QMCMD13J208S	2 ½ in.																			
QMCMD13J065S	**65 mm**																			
QMCMD15J211S	2 11/16 in.	22215	**62.5** 2.46	**64.5** 2.54	**190.5** 7.50	**109.0** 4.29	**162.1** 6.38	**134.6** 5.30	**222.3** 8.75	**161.9** 6.375	**20.6** 0.81	**16** 5/8	**31.8** 1.25	**94.2** 3.71	**96.5** 3.80	**60.2** 2.37	**31.8** 1.25	**2.3** 0.09	**91.9** 3.62	**10.0** 22
QMCMD15J212S	2 ¾ in.																			
QMCMD15J070S	**70 mm**																			
QMCMD15J215S	2 15/16 in.																			
QMCMD15J300S	3 in.																			
QMCMD15J075S	**75 mm**																			
QMCMD18J303S	3 3/16 in.	22218	**73.2** 2.88	**75.2** 2.96	**219.2** 8.63	**120.9** 4.76	**187.5** 7.38	**154.9** 6.10	**262.6** 10.34	**187.3** 7.375	**25.4** 1.00	**20** 3/4	**36.6** 1.44	**106.4** 4.19	**108.5** 4.27	**65.8** 2.59	**33.3** 1.31	**4.3** 0.17	**102.1** 4.02	**14.5** 32
QMCMD18J304S	3 ¼ in.																			
QMCMD18J080S	**80 mm**																			
QMCMD18J085S	**85 mm**																			
QMCMD18J307S	3 7/16 in.																			
QMCMD18J308S	3 ½ in.																			
QMCMD18J090S	**90 mm**																			

[1] Pilot tolerance: +0/-0.05 mm (+0/-0.002 in.).

QMCW PILOTED FLANGE CARTRIDGES

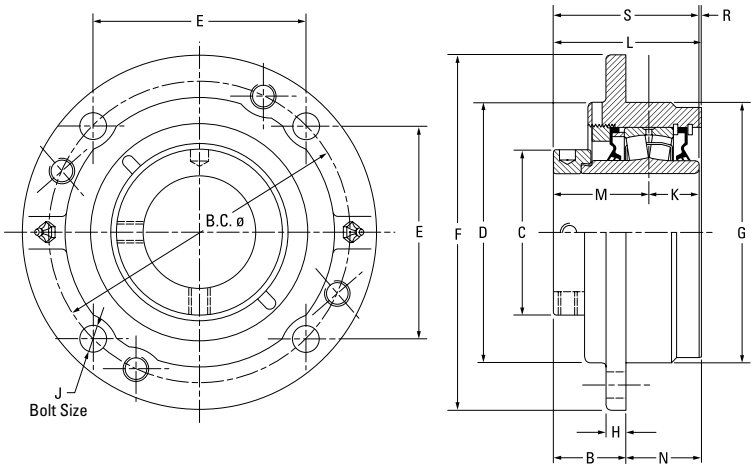

Bearing Part No.	Shaft Dia.	Bearing No.	B FIX	B EXP	B.C.	C	D	E	F	G[1]	H	J	K	L FIX	L EXP	M	N	R	S	Wt.
	mm in.		**mm** in.	**mm** in.	**mm** in.	**mm** in.	**mm** in.	**mm** in.	**mm** in.	**mm** in.	**mm** in.	**mm** in.	**mm** in.	**mm** in.	**mm** in.	**mm** in.	**mm** in.	**mm** in.	**mm** in.	**mm** in.	**kg** lbs.
QMCW08J035S	**35 mm**	22208	**38.6** 1.53	**40.9** 1.61	**111.3** 4.38	**59.9** 2.36	**92.2** 3.63	**78.5** 3.09	**133.4** 5.25	**92.1** 3.625	**12.7** 0.50	**10** 7/16	**25.4** 1.00	**73.7** 2.90	**75.7** 2.98	**44.5** 1.75	**35.1** 1.38	**3.8** 0.15	**69.9** 2.75	**3.6** 8
QMCW08J107S	1 7/16 in.																			
QMCW08J108S	1 ½ in.																			
QMCW09J040S	**40 mm**	22209	**38.9** 1.53	**40.1** 1.58	**130.3** 5.13	**66.8** 2.63	**111.3** 4.38	**91.9** 3.62	**155.7** 6.13	**108.0** 4.250	**10.2** 0.40	**10** 7/16	**25.1** 0.99	**77.0** 3.03	**78.2** 3.08	**47.8** 1.88	**38.1** 1.50	**4.1** 0.16	**72.9** 2.87	**4.1** 9
QMCW09J111S	1 11/16 in.																			
QMCW09J112S	1 ¾ in.																			
QMCW09J045S	**45 mm**																			
QMCW10J115S	1 15/16 in.	22210	**39.1** 1.54	**41.1** 1.62	**136.7** 5.38	**71.4** 2.81	**113.5** 4.47	**96.5** 3.80	**162.1** 6.38	**114.3** 4.500	**9.7** 0.38	**10** 7/16	**24.9** 0.98	**77.2** 3.04	**79.2** 3.12	**48.0** 1.89	**38.1** 1.50	**4.3** 0.17	**72.9** 2.87	**4.5** 10
QMCW10J200S	2 in.																			
QMCW10J050S	**50 mm**																			
QMCW11J203S	2 3/16 in.	22211	**45.7** 1.80	**47.8** 1.88	**152.4** 6.00	**75.9** 2.99	**127.0** 5.00	**107.7** 4.24	**181.1** 7.13	**127.0** 5.000	**14.2** 0.56	**12** ½	**28.7** 1.13	**86.9** 3.42	**88.9** 3.50	**50.5** 1.99	**41.4** 1.63	**7.62** 0.30	**79.2** 3.12	**5.9** 13
QMCW11J204S	2 ¼ in.																			
QMCW11J055S	**55 mm**																			
QMCW13J060S	**60 mm**	22213	**47.5** 1.87	**49.5** 1.95	**165.1** 6.50	**91.9** 3.62	**139.7** 5.50	**116.8** 4.60	**193.8** 7.63	**139.7** 5.500	**12.7** 0.50	**12** ½	**31.5** 1.24	**90.2** 3.55	**92.2** 3.63	**54.1** 2.13	**42.9** 1.69	**4.31** 0.17	**85.6** 3.37	**7.3** 16
QMCW13J207S	2 7/16 in.																			
QMCW13J208S	2 ½ in.																			
QMCW13J065S	**65 mm**																			
QMCW15J211S	2 11/16 in.	22215	**46.0** 1.81	**48.0** 1.89	**190.5** 7.50	**101.9** 4.01	**162.1** 6.38	**134.6** 5.30	**222.3** 8.75	**161.9** 6.375	**12.7** 0.50	**16** 5/8	**31.8** 1.25	**93.5** 3.68	**95.5** 3.76	**60.2** 2.37	**47.8** 1.88	**1.5** 0.06	**91.9** 3.62	**10.0** 22
QMCW15J212S	2 ¾ in.																			
QMCW15J070S	**70 mm**																			
QMCW15J215S	2 15/16 in.																			
QMCW15J300S	3 in.																			
QMCW15J075S	**75 mm**																			
QMCW18J303S	3 3/16 in.	22218	**62.5** 2.46	**64.5** 2.54	**219.2** 8.63	**120.9** 4.76	**187.5** 7.38	**154.9** 6.10	**260.4** 10.25	**187.3** 7.375	**22.4** 0.88	**20** ¾	**36.6** 1.44	**110.2** 4.34	**112.3** 4.42	**65.8** 2.59	**47.8** 1.88	**7.9** 0.31	**102.4** 4.03	**14.5** 32
QMCW18J304S	3 ¼ in.																			
QMCW18J080S	**80 mm**																			
QMCW18J085S	**85 mm**																			
QMCW18J307S	3 7/16 in.																			
QMCW18J308S	3 ½ in.																			
QMCW18J090S	**90 mm**																			

[1]Pilot tolerance: +0/-0.05 mm (+0/-0.002 in.).

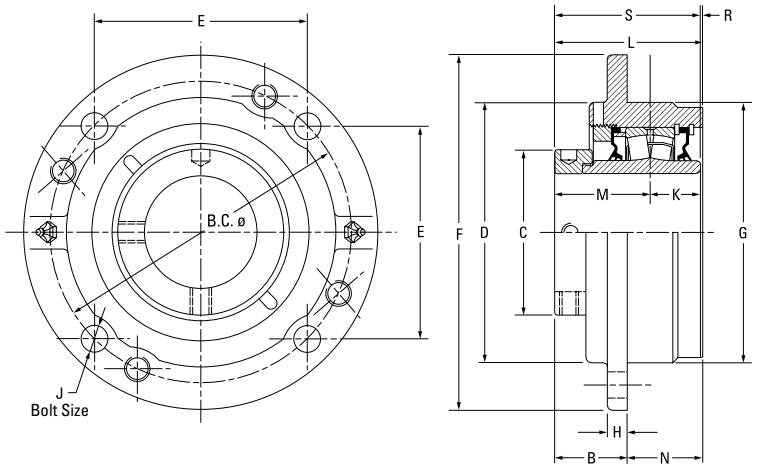

Bearing Part No.	Shaft Dia.	Bearing No.	B FIX	B EXP	B.C.	C	D	E	F	G[1]	H	J	K	L FIX	L EXP	M	N	R	S	Wt.
	mm in.		**mm** in.	**mm** in.	**mm** in.	**mm** in.	**mm** in.	**mm** in.	**mm** in.	**mm** in.	**mm** in.	**mm** in.	**mm** in.	**mm** in.	**mm** in.	**mm** in.	**mm** in.	**mm** in.	**mm** in.	**mm** in.	**kg** lbs.
QMCW20J311S	3 11⁄16 in.	22220	**63.5** 2.50	**65.5** 2.58	**238.3** 9.38	**152.4** 6.00	**206.5** 8.13	**168.4** 6.63	**276.4** 10.88	**206.4** 8.125	**25.4** 1.00	**20** 3⁄4	**41.4** 1.63	**120.7** 4.75	**122.7** 4.83	**75.2** 2.96	**57.2** 2.25	**4.1** 0.16	**116.6** 4.59	**19.5** 43
QMCW20J312S	3 3⁄4 in.																			
QMCW20J315S	3 15⁄16 in.																			
QMCW20J400S	4 in.																			
QMCW20J100S	**100 mm**																			
QMCW22J110S[2]	**110 mm**	22222	**76.5** 3.01	**78.5** 3.09	**298.5** 11.75[2]	**160.0** 6.30	**254.0** 10.00	**149.4** 5.88[2]	**342.9** 13.50	**260.4** 10.250	**25.4** 1.00	**20** 3/4[2]	**46.5** 1.83	**144.8** 5.70	**146.8** 5.78	**94.0** 3.70	**68.3** 2.69	**4.3** 0.17	**140.5** 5.53	**32.7** 72
QMCW22J407S[2]	4 7⁄16 in.																			
QMCW22J408S[2]	4 1⁄2 in.																			
QMCW22J115S[2]	**115 mm**																			
QMCW26J125S[2]	**125 mm**	22226	**73.7** 2.90	**75.7** 2.98	**323.9** 12.75[2]	**175.0** 6.89	**266.7** 10.50	**162.1** 6.38[2]	**374.7** 14.75	**279.4** 11.000	**26.2** 1.03	**24** 7/8[2]	**58.7** 2.31	**151.4** 5.96	**153.4** 6.04	**94.7** 3.73	**77.9** 3.065	**-1.8** -0.07	**153.4** 6.04	**46.3** 102
QMCW26J415S[2]	4 15⁄16 in.																			
QMCW26J500S[2]	5 in.																			
QMCW26J130S[2]	**130 mm**																			
QMCW30J507S[2]	5 7⁄16 in.	23230	**82.8** 3.26	**84.8** 3.34	**368.3** 14.50[2]	**205.0** 8.07	**304.8** 12.00	**184.2** 7.25[2]	**431.8** 17.00	**330.2** 13.000	**26.2** 1.03	**24** 7/8[2]	**75.9** 2.99	**204.2** 8.04	**206.2** 8.12	**116.1** 4.57	**121.4** 4.78	**12.2** 0.48	**192.0** 7.56	**102.5** 226
QMCW30J508S[2]	5 1⁄2 in.																			
QMCW30J140S[2]	**140 mm**																			
QMCW30J515S[2]	5 15⁄16 in.	23230	**82.8** 3.26	**84.8** 3.34	**419.1** 16.50[2]	**205.0** 8.07	**304.8** 12.00	**209.6** 8.25[2]	**482.6** 19.00	**355.6** 14.000	**26.2** 1.03	**24** 7/8[2]	**75.9** 2.99	**211.3** 8.32	**213.4** 8.40	**116.1** 4.57	**128.5** 5.06	**19.3** 0.76	**192.0** 7.56	**101.6** 224
QMCW30J600S[2]	6 in.																			
QMCW30J150S[2]	**150 mm**																			
QMCW34J607S[2]	6 7⁄16 in.	23234	**85.9** 3.38	**87.9** 3.46	**431.8** 17.00	**235.0** 9.25	**355.6** 14.00	**215.9** 8.50	**482.6** 19.00	**381.0** 15.000	**28.7** 1.13	**24** 1[2]	**85.1** 3.35	**216.2** 8.51	**218.2** 8.59	**129.0** 5.08	**130.3** 5.13	**2.0** 0.08	**214.1** 8.43	**152.4** 336
QMCW34J608S[2]	6 1⁄2 in.																			
QMCW34J170S[2]	**170 mm**																			
QMCW34J615S[2]	6 15⁄16 in.																			
QMCW34J700S[2]	7 in.																			
QMCW34J180S[2]	**180 mm**																			

[1] Pilot tolerance: +0/-0.05 mm (+0/-0.002 in.).
[2] Six-bolt housing.

QMF FOUR-BOLT SQUARE FLANGE BLOCKS

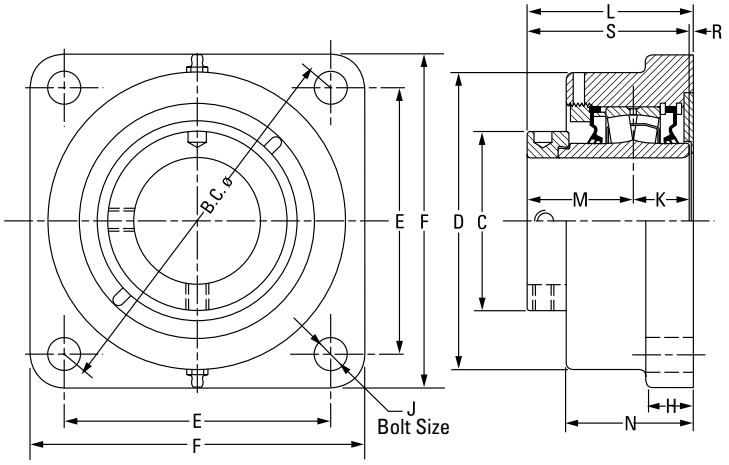

Bearing Part No.	Shaft Dia.	Bearing No.	B.C.	C	D	E	F	H	J	K	L FIX	L EXP	M	N	R	S	Wt.
	mm in.		**mm** in.	**mm** in.	**mm** in.	**mm** in.	**mm** in.	**mm** in.	**mm** in.	**mm** in.	**mm** in.	**mm** in.	**mm** in.	**mm** in.	**mm** in.	**mm** in.	**lbs.** kg
QMF08J035S	**35 mm**	22208	**127.7** 4.95	**60.5** 2.38	**93.7** 3.69	**88.9** 3.50	**117.6** 4.63	**22.4** 0.88	**12** 1/2	**25.4** 1.00	**72.9** 2.87	**74.9** 2.95	**44.5** 1.75	**57.2** 2.25	**3.0** 0.12	**69.9** 2.75	**4.5** 10
QMF08J107S	1 7/16 in.																
QMF08J108S	1 1/2 in.	22208	**148.3** 5.84	**60.5** 2.38	**108.0** 4.25	**104.9** 4.13	**136.7** 5.38	**22.4** 0.88	**12** 1/2	**25.4** 1.00	**73.7** 2.90	**75.7** 2.98	**44.5** 1.75	**59.4** 2.34	**3.8** 0.15	**69.9** 2.75	**4.5** 10
QMF09J111S	1 11/16 in.	22209	**148.3** 5.84	**66.8** 2.63	**118.4** 4.66	**104.9** 4.13	**136.7** 5.38	**22.4** 0.88	**12** 1/2	**25.4** 1.00	**79.5** 3.13	**81.5** 3.21	**47.8** 1.88	**63.5** 2.50	**6.4** 0.25	**73.2** 2.88	**5.0** 11
QMF09J040S	**40 mm**																
QMF09J112S	1 3/4 in.	22209	**157.2** 6.19	**66.8** 2.63	**118.4** 4.66	**111.3** 4.38	**143.0** 5.63	**22.4** 0.88	**12** 1/2	**25.4** 1.00	**79.5** 3.13	**81.5** 3.21	**47.8** 1.88	**63.5** 2.50	**6.4** 0.25	**72.9** 2.87	**5.0** 11
QMF09J045S	**45 mm**																
QMF10J115S	1 15/16 in.	22210	**157.2** 6.19	**71.4** 2.81	**120.7** 4.75	**111.3** 4.38	**139.7** 5.50	**22.4** 0.88	**12** 1/2	**24.4** 0.98	**80.8** 3.18	**82.8** 3.26	**48.0** 1.89	**65.0** 2.56	**7.9** 0.31	**72.9** 2.87	**5.0** 11
QMF10J200S	2 in.																
QMF10J050S	**50 mm**																
QMF11J203S	2 3/16 in.	22211	**175.0** 6.89	**75.9** 2.99	**130.3** 5.13	**124.0** 4.88	**157.2** 6.19	**25.4** 1.00	**16** 5/8	**28.7** 1.13	**82.8** 3.26	**84.8** 3.34	**50.5** 1.99	**66.8** 2.63	**3.3** 0.13	**79.2** 3.12	**6.4** 14
QMF11J204S	2 1/4 in.																
QMF11J055S	**55 mm**																
QMF13J060S	**60 mm**	22213	**193.0** 7.60	**91.9** 3.62	**146.1** 5.75	**136.7** 5.38	**168.4** 6.63	**25.4** 1.00	**16** 5/8	**31.5** 1.24	**88.6** 3.49	**90.7** 3.57	**54.1** 2.13	**72.4** 2.85	**3.0** 0.12	**85.6** 3.37	**7.7** 17
QMF13J207S	2 7/16 in.																
QMF13J208S	2 1/2 in.																
QMF13J065S	**65 mm**																
QMF15J211S	2 11/16 in.	22215	**215.6** 8.49	**101.9** 4.01	**168.9** 6.65	**152.4** 6.00	**189.0** 7.44	**26.9** 1.06	**20** 3/4	**31.8** 1.25	**96.0** 3.78	**98.0** 3.86	**60.2** 2.37	**76.2** 3.00	**4.1** 0.16	**91.9** 3.62	**10.4** 23
QMF15J212S	2 3/4 in.																
QMF15J070S	**70 mm**																
QMF15J215S	2 15/16 in.																
QMF15J300S	3 in.																
QMF15J075S	**75 mm**																
QMF18J303S	3 3/16 in.	22218	**251.7** 9.91	**120.9** 4.76	**193.8** 7.63	**177.8** 7.00	**219.2** 8.63	**33.3** 1.31	**20** 3/4	**36.6** 1.44	**107.2** 4.22	**109.2** 4.30	**66.8** 2.59	**84.1** 3.31	**4.8** 0.19	**102.4** 4.03	**15.9** 35
QMF18J304S	3 1/4 in.																
QMF18J080S	**80 mm**																
QMF18J085S	**85 mm**																
QMF18J307S	3 7/16 in.																
QMF18J308S	3 1/2 in.																
QMF18J090S	**90 mm**																
QMF20J311S	3 11/16 in.	22220	**278.4** 10.96	**152.4** 6.00	**224.0** 8.82	**196.9** 7.75	**253.2** 9.97	**38.1** 1.50	**24** 7/8	**41.4** 1.63	**126.2** 4.97	**128.3** 5.05	**75.2** 2.96	**103.1** 4.06	**9.4** 0.37	**116.6** 4.59	**24.9** 55
QMF20J312S	3 3/4 in.																
QMF20J315S	3 15/16 in.																
QMF20J400S	4 in.																
QMF20J100S	**100 mm**																
QMF22J110S	**110 mm**	22222	**314.5** 12.38	**160.0** 6.30	**256.8** 10.11	**222.3** 8.75	**276.4** 10.88	**38.1** 1.50	**24** 7/8	**46.5** 1.83	**150.1** 5.91	**152.1** 5.99	**94.0** 3.70	**106.9** 4.21	**9.7** 0.38	**140.5** 5.53	**28.6** 63
QMF22J407S	4 7/16 in.																
QMF22J408S	4 1/2 in.																
QMF22J115S	**115 mm**																

QMFL FOUR-BOLT SQUARE FLANGE BLOCKS

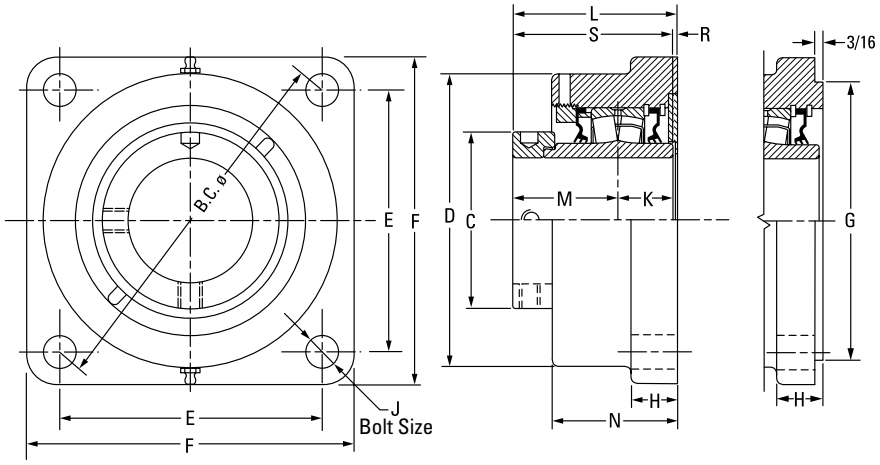

Bearing Part No.	Shaft Dia.	Bearing No.	B.C.	C	D	E	F	G[1][2][3]	H	J	K	L FIX	L EXP	M	N	R	S	Wt.
	mm in.		**mm** in.	**mm** in.	**mm** in.	**mm** in.	**mm** in.	**mm** in.	**mm** in.	**mm** in.	**mm** in.	**mm** in.	**mm** in.	**mm** in.	**mm** in.	**mm** in.	**mm** in.	**kg** lbs.
QMFL08J035S	**35 mm**	22208	**127.0** 5.00	**60.5** 2.38	**93.7** 3.69	**89.9** 3.54	**117.6** 4.63	N/A	**22.4** 0.88	**12** 1/2	**25.4** 1.00	**72.9** 2.87	**74.9** 2.95	**44.5** 1.75	**57.2** 2.25	**3.0** 0.12	**69.9** 2.75	**4.5** 10
QMFL08J107S	1 7/16 in.																	
QMFL08J108S	1 1/2 in.																	
QMFL09J111S	1 11/16 in.	22209	**139.7** 5.50	**66.8** 2.63	**118.4** 4.66	**98.8** 3.89	**136.7** 5.38	N/A	**22.4** 0.88	**12** 1/2	**25.1** 0.99	**79.5** 3.13	**81.5** 3.21	**47.8** 1.88	**63.5** 2.50	**6.6** 0.26	**72.9** 2.87	**5.0** 11
QMFL09J040S	**40 mm**																	
QMFL09J112S	1 3/4 in.																	
QMFL09J045S	**45 mm**																	
QMFL10J115S	1 15/16 in.	22210	**146.1** 5.75	**71.4** 2.81	**115.3** 4.54	**103.4** 4.07	**131.8** 5.19	N/A	**23.1** 0.91	**12** 1/2	**24.9** 0.98	**80.8** 3.18	**82.8** 3.26	**48.0** 1.89	**62.5** 2.46	**7.9** 0.31	**72.9** 2.87	**5.0** 11
QMFL10J200S	2 in.																	
QMFL10J050S	**50 mm**																	
QMFL11J203S	2 3/16 in.	22211	**162.1** 6.38	**76.0** 2.99	**130.3** 5.13	**114.3** 4.50	**149.4** 5.88	N/A	**19.1** 0.75	**16** 5/8	**28.7** 1.13	**83.3** 3.28	**85.3** 3.36	**50.5** 1.99	**66.8** 2.63	**3.8** 0.15	**79.2** 3.12	**6.4** 14
QMFL11J204S	2 1/4 in.																	
QMFL11J055S	**55 mm**																	
QMFL13J060S	**60 mm**	22213	**171.5** 6.75	**91.9** 3.62	**146.1** 5.75	**121.2** 4.77	**157.2** 6.19	N/A	**25.4** 1.00	**16** 5/8	**31.5** 1.24	**88.9** 3.50	**90.7** 3.57	**54.1** 2.13	**72.6** 2.86	**3.0** 0.12	**85.6** 3.37	**7.7** 17
QMFL13J207S	2 7/16 in.																	
QMFL13J208S	2 1/2 in.																	
QMFL13J065S	**65 mm**																	
QMFL15J211S	2 11/16 in.	22215	**200.2** 7.88	**101.9** 4.01	**168.4** 6.63	**141.2** 5.56	**182.6** 7.19	N/A	**26.9** 1.06	**20** 3/4	**31.8** 1.25	**95.8** 3.77	**97.8** 3.85	**60.2** 2.37	**74.4** 2.93	**3.8** 0.15	**91.9** 3.62	**10.4** 23
QMFL15J212S	2 3/4 in.																	
QMFL15J070S	**70 mm**																	
QMFL15J215S	2 15/16 in.																	
QMFL15J300S	3 in.																	
QMFL15J075S	**75 mm**																	
QMFL18J303S	3 3/16 in.	22218	**241.3** 9.50	**120.9** 4.76	**193.8** 7.63	**170.7** 6.72	**212.9** 8.38	**187.33** 7.375	**32.5** 1.28	**20** 3/4	**36.6** 1.44	**106.4** 4.19	**108.5** 4.27	**65.8** 2.59	**86.4** 3.40	**4.1** 0.16	**102.4** 4.03	**15.9** 35
QMFL18J304S	3 1/4 in.																	
QMFL18J080S	**80 mm**																	
QMFL18J085S	**85 mm**																	
QMFL18J307S	3 7/16 in.																	
QMFL18J308S	3 1/2 in.																	
QMFL18J090S	**90 mm**																	
QMFL20J311S	3 11/16 in.	22220	**273.1** 10.75	**152.4** 6.00	**229.6** 9.04	**193.0** 7.60	**241.3** 9.50	**215.90** 8.500	**38.1** 1.50	**24** 1	**41.4** 1.63	**132.3** 5.21	**134.4** 5.29	**75.2** 2.96	**104.6** 4.12	**15.7** 0.62	**116.6** 4.59	**24.9** 55
QMFL20J312S	3 3/4 in.																	
QMFL20J315S	3 15/16 in.																	
QMFL20J400S	4 in.																	
QMFL20J100S	**100 mm**																	

[1]Pilot tolerance: +0/-0.05 mm (+0/-0.002 in.).
[2]Add (p) to the end of the housing designation in the part number to order with pilot using G dimension.
[3]Piloted flange blocks will be quoted (price and delivery) upon request. For optional spigot on flange side, insert the letter P as seen in the following example: QMFP**J***S.

QMFMD FOUR-BOLT SQUARE FLANGE BLOCKS

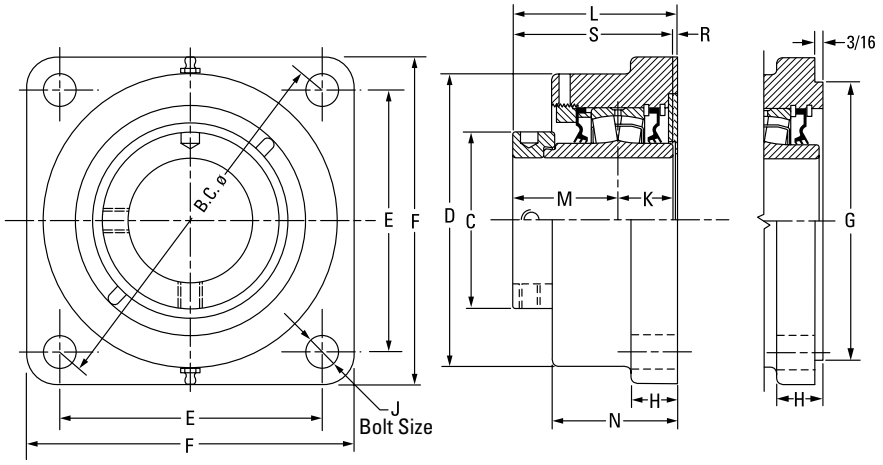

Bearing Part No.	Shaft Dia.	Bearing No.	B.C.	C	D	E	F	H	J	K	L FIX	L EXP	M	N	R	S	Wt.
	mm in.		**mm** in.	**mm** in.	**mm** in.	**mm** in.	**mm** in.	**mm** in.	**mm** in.	**mm** in.	**mm** in.	**mm** in.	**mm** in.	**mm** in.	**mm** in.	**mm** in.	**kg** lbs.
QMFMD08J035S	**35 mm**	22208	**143.8** 5.66	**60.5** 2.38	**108.0** 4.25	**101.6** 4.00	**130.3** 5.13	**22.4** 0.88	**12** 1/2	**25.4** 1.00	**72.9** 2.87	**74.9** 2.95	**44.5** 1.75	**59.4** 2.34	**3.0** 0.12	**69.9** 2.75	**4.5** 10
QMFMD08J107S	1 7/16 in.																
QMFMD08J108S	1 1/2 in.	22208	**143.8** 5.66	**60.5** 2.38	**108.0** 4.25	**104.9** 4.13	**136.7** 5.38	**22.4** 0.88	**12** 1/2	**25.4** 1.00	**73.7** 2.90	**75.7** 2.98	**44.5** 1.75	**59.4** 2.34	**3.8** 0.15	**69.9** 2.75	**4.5** 10
QMFMD09J040S	**40 mm**	22209	**143.8** 5.66	**66.8** 2.63	**108.0** 4.25	**104.9** 4.13	**136.7** 5.38	**22.4** 0.88	**12** 1/2	**25.4** 1.00	**79.5** 3.13	**81.5** 3.21	**47.8** 1.88	**63.5** 2.50	**6.4** 0.25	**73.2** 2.88	**5.0** 11
QMFMD09J111S	1 11/16 in.	22209	**157.2** 6.19	**66.8** 2.63	**118.4** 4.66	**111.3** 4.38	**143.0** 5.63	**22.4** 0.88	**12** 1/2	**25.4** 1.00	**79.5** 3.13	**81.5** 3.21	**47.8** 1.88	**63.5** 2.50	**6.4** 0.25	**73.2** 2.88	**5.0** 11
QMFMD09J112S	1 3/4 in.																
QMFMD09J045S	**45 mm**																
QMFMD10J115S	1 15/16 in.	22210	**184.1** 7.25	**73.2** 2.88	**120.7** 4.75	**130.2** 5.13	**165.1** 6.5	**22.4** 0.88	**12** 1/2	**25.4** 1.00	**80.8** 3.18	**82.8** 3.26	**47.5** 1.87	**65.0** 2.56	**7.9** 0.31	**72.9** 2.87	**5.0** 11
QMFMD10J200S	2 in.																
QMFMD10J050S	**50 mm**																
QMFMD11J203S	2 3/16 in.	22211	**202.1** 7.96	**82.6** 3.25	**137.9** 5.43	**142.9** 5.63	**174.8** 6.88	**25.4** 1.00	**16** 5/8	**28.7** 1.13	**83.3** 3.27	**85.1** 3.35	**50.8** 2.00	**66.8** 2.63	**3.8** 0.15	**79.5** 3.13	**6.4** 14
QMFMD11J204S	2 1/4 in.																
QMFMD11J055S	**55 mm**																
QMFMD13J060S	**60 mm**	22213	**211.0** 8.31	**96.8** 3.81	**146.1** 5.75	**149.2** 5.88	**187.5** 7.38	**25.4** 1.00	**16** 5/8	**31.5** 1.24	**89.2** 3.51	**91.2** 3.59	**54.6** 2.15	**72.4** 2.85	**3.0** 0.12	**86.1** 3.39	**7.7** 17
QMFMD13J207S	2 7/16 in.																
QMFMD13J208S	2 1/2 in.																
QMFMD13J065S	**65 mm**																
QMFMD15J211S	2 11/16 in.	22215	**215.4** 8.48	**109.0** 4.29	**168.9** 6.65	**152.4** 6.00	**189.0** 7.44	**26.9** 1.06	**20** 3/4	**31.8** 1.25	**95.8** 3.77	**97.8** 3.85	**60.2** 2.37	**76.2** 3.00	**3.8** 0.15	**91.9** 3.62	**10.4** 23
QMFMD15J212S	2 3/4 in.																
QMFMD15J070S	**70 mm**																
QMFMD15J215S	2 15/16 in.																
QMFMD15J300S	3 in.																
QMFMD15J075S	**75 mm**																
QMFMD18J303S	3 3/16 in.	22218	**241.3** 9.50	**130.2** 5.13	**193.8** 7.63	**171.5** 6.72	**212.7** 8.38	**32.5** 1.28	**20** 3/4	**36.6** 1.44	**106.4** 4.19	**108.5** 4.27	**65.8** 2.59	**86.4** 3.40	**4.3** 0.17	**102.4** 4.03	**15.9** 35
QMFMD18J304S	3 1/4 in.																
QMFMD18J080S	**80 mm**																
QMFMD18J085S	**85 mm**																
QMFMD18J307S	3 7/16 in.																
QMFMD18J308S	3 1/2 in.																
QMFMD18J090S	**90 mm**																

QMFBB BRACKET FLANGE BLOCKS

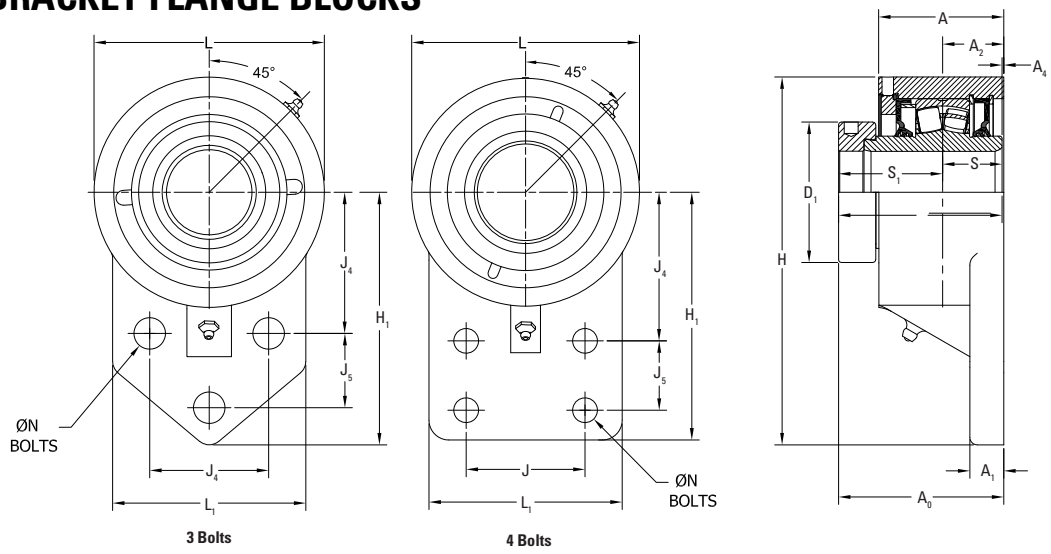

Bearing Part No.	Shaft Dia.	Bolt Pattern	Bearing No.	H	H1	J	J4	J5	L	L1	A	A0	A1	A2	A4	B	D1	S	S1	Bolt Size	Wt.
	mm in.			**mm** in.	**mm** in.	**mm** in.	**mm** in.	**mm** in.	**mm** in.	**mm** in.	**mm** in.	**mm** in.	**mm** in.	**mm** in.	**mm** in.	**mm** in.	**mm** in.	**mm** in.	**mm** in.	**mm** in.	**kg** lbs.
QMFBB08J107S	1 7⁄16 in.	**3-Bolt**	22208	**157.2** 6.19	**108.0** 4.25	**50.8** 2.00	**60.3** 2.38	**31.8** 1.25	**98.6** 3.88	**82.6** 3.25	**53.6** 2.11	**70.6** 2.78	**16.0** 0.63	**26.2** 1.03	**0.8** 0.03	**69.9** 2.75	**60.5** 2.38	**25.4** 1.00	**44.5** 1.75	**M12** 1⁄2	**2** 5.5
QMFBB08J108S	1 1⁄2 in.																				
QMFBB08J035S	**35 mm**																				
QMFBB10J115S	1 15⁄16 in.	**3-Bolt**	22210	**192.3** 7.57	**131.8** 5.19	**69.9** 2.75	**74.6** 2.94	**41.3** 1.63	**120.7** 4.75	**101.6** 4.00	**60.2** 2.37	**76.7** 3.02	**17.5** 0.69	**29.2** 1.15	**3.8** 0.15	**72.9** 2.87	**70.1** 2.76	**25.4** 1.00	**47.5** 1.87	**M12** 1⁄2	**4** 9.4
QMFBB10J200S	2 in.																				
QMFBB10J050S	**50 mm**																				
QMFBB13J207S	2 7⁄16 in.	**4-Bolt**	22213	**231.9** 9.13	**158.9** 6.26	**76.2** 3.00	**95.4** 3.75	**44.5** 1.75	**146.1** 5.75	**123.8** 4.88	**70.1** 2.76	**87.9** 3.46	**19.1** 0.75	**33.8** 1.33	**2.3** 0.09	**85.6** 3.37	**91.9** 3.62	**31.5** 1.24	**54.1** 2.13	**M16** 5⁄8	**7** 16.1
QMFBB13J208S	2 1⁄2 in.																				
QMFBB13J060S	**60 mm**																				
QMFBB15J211S	2 11⁄16 in.	**4-Bolt**	22215	**262.4** 10.33	**177.9** 7.01	**101.6** 4.00	**98.6** 3.88	**57.2** 2.25	**168.9** 6.65	**146.1** 5.75	**73.2** 2.88	**95.3** 3.75	**22.4** 0.88	**35.1** 1.38	**3.3** 0.13	**91.9** 3.62	**101.9** 4.01	**31.8** 1.25	**60.2** 2.37	**M20** 3⁄4	**11** 23.2
QMFBB15J212S	2 3⁄4 in.																				
QMFBB15J215S	2 15⁄16 in.																				
QMFBB15J070S	3 in.																				
QMFBB15J075S	**70 mm**																				
QMFBB15J300S	**75 mm**																				

QMFY ROUND FLANGE BLOCKS

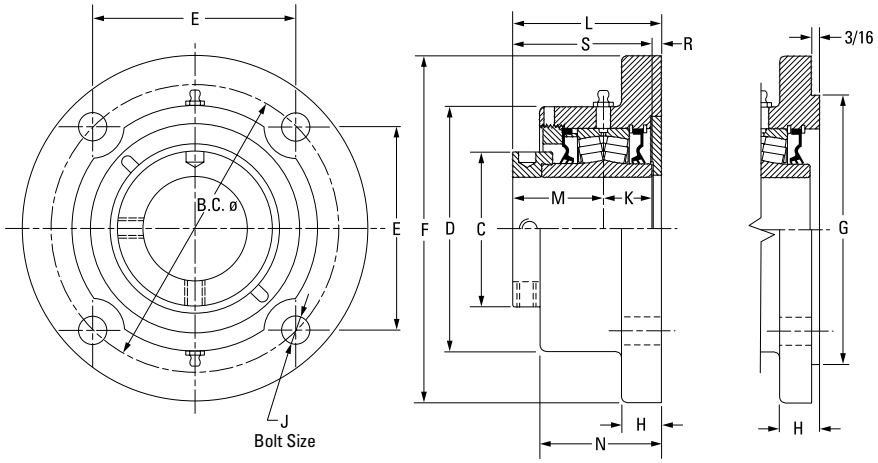

Bearing Part No.	Shaft Dia.	Bearing No.	B.C.	C	D	E	F	G[1][2][3]	H	J	K	L FIX	L EXP	M	N	R	S	Wt.
	mm in.		**mm** in.	**mm** in.	**mm** in.	**mm** in.	**mm** in.	**mm** in.	**mm** in.	**mm** in.	**mm** in.	**mm** in.	**mm** in.	**mm** in.	**mm** in.	**mm** in.	**mm** in.	**kg** lbs.
QMFY08J035S	**35 mm**	22208	**127.0** 5.00[4]	**60.5** 2.38	**108.0** 4.25	**110.0** 4.33[4]	**158.8** 6.25	**90.50** 3.563	**19.1** 0.75	**12** 1/2[4]	**25.4** 1.00	**73.2** 2.88	**75.2** 2.96	**44.5** 1.75	**57.4** 2.26	**3.3** 0.13	**69.9** 2.75	**4.5** 10
QMFY08J107S	1 7/16 in.																	
QMFY08J108S	1 1/2 in.																	
QMFY09J040S	**40 mm**	22209	**139.7** 5.50	**66.8** 2.63	**104.9** 4.13	**98.8** 3.89	**171.5** 6.75	**103.20** 4.063	**20.6** 0.81	**12** 1/2	**25.1** 0.99	**76.2** 3.00	**78.2** 3.08	**47.8** 1.88	**60.5** 2.38	**3.0** 0.12	**72.9** 2.87	**5.0** 11
QMFY09J111S	1 11/16 in.																	
QMFY09J112S	1 3/4 in.																	
QMFY09J045S	**45 mm**																	
QMFY10J115S	1 15/16 in.	22210	**146.1** 5.75	**71.4** 2.81	**115.3** 4.54	**103.4** 4.07	**177.8** 7.00	**111.13** 4.375	**19.1** 0.75	**12** 1/2	**24.9** 0.98	**75.9** 2.99	**78.0** 3.07	**48.0** 1.89	**58.4** 2.30	**3.0** 0.12	**72.9** 2.87	**5.4** 12
QMFY10J200S	2 in.																	
QMFY10J050S	**50 mm**																	
QMFY11J203S	2 3/16 in.	22211	**162.1** 6.38	**75.9** 2.99	**130.3** 5.13	**114.3** 4.50	**196.9** 7.75	**127.00** 5.000	**19.1** 0.75	**16** 5/8	**28.7** 1.13	**82.3** 3.24	**84.3** 3.32	**50.8** 2.00	**62.0** 2.44	**3.0** 0.12	**79.2** 3.12	**6.8** 15
QMFY11J204S	2 1/4 in.																	
QMFY11J055S	**55 mm**																	
QMFY13J060S	**60 mm**	22213	**171.5** 6.75	**91.9** 3.62	**146.1** 5.75	**121.2** 4.77	**206.5** 8.13	**138.13** 5.438	**23.9** 0.94	**16** 5/8	**31.5** 1.24	**88.1** 3.47	**90.4** 3.56	**54.1** 2.13	**72.4** 2.85	**2.3** 0.09	**85.6** 3.37	**8.6** 19
QMFY13J207S	2 7/16 in.																	
QMFY13J208S	2 1/2 in.																	
QMFY13J065S	**65 mm**																	
QMFY15J211S	2 11/16 in.	22215	**199.9** 7.87	**101.9** 4.01	**168.4** 6.63	**141.2** 5.56	**241.3** 9.50	**160.35** 6.313	**23.9** 0.94	**20** 3/4	**31.8** 1.25	**98.6** 3.88	**100.6** 3.96	**60.2** 2.37	**76.2** 3.00	**6.4** 0.25	**91.9** 3.62	**12.7** 28
QMFY15J212S	2 3/4 in.																	
QMFY15J070S	**70 mm**																	
QMFY15J215S	2 15/16 in.																	
QMFY15J300S	3 in.																	
QMFY15J075S	**75 mm**																	

[1]Pilot tolerance: +0/-0.05 mm (+0/-0.002 in.).
[2]Add (p) to the end of the housing designation in the part number to order with pilot using G dimension.
[3]Piloted flange blocks will be quoted (price and delivery) upon request. For optional spigot on flange side, insert the letter P as seen in the following example: QMFP**J***S.
NOTE: Housings also are available with a 3/16 in. machined pilot. Please contact your Timken engineer for more information.

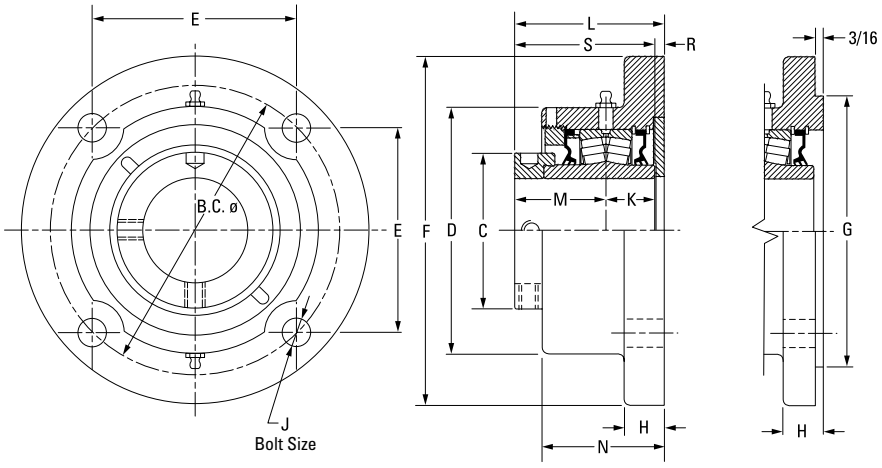

Bearing Part No.	Shaft Dia.	Bearing No.	B.C.	C	D	E	F	G[1][2][3]	H	J	K	L FIX	L EXP	M	N	R	S	Wt.
	mm in.		**mm** in.	**mm** in.	**mm** in.	**mm** in.	**mm** in.	**mm** in.	**mm** in.	**mm** in.	**mm** in.	**mm** in.	**mm** in.	**mm** in.	**mm** in.	**mm** in.	**mm** in.	**kg** lbs.
QMFY18J303S	3 3⁄16 in.	22218	**241.3** 9.50	**120.9** 4.76	**193.8** 7.63	**170.7** 6.72	**282.7** 11.13	N/A	**28.7** 1.13	**24** 7⁄8	**36.6** 1.44	**108.7** 4.28	**110.7** 4.36	**65.8** 2.59	**85.3** 3.36	**6.4** 0.25	**102.4** 4.03	**19.1** 42
QMFY18J304S	3 ¼ in.																	
QMFY18J080S	**80 mm**																	
QMFY18J085S	**85 mm**																	
QMFY18J307S	3 7⁄16 in.																	
QMFY18J308S	3 ½ in.																	
QMFY18J090S	**90 mm**																	
QMFY20J311S	3 11⁄16 in.	22220	**273.1** 10.75	**152.4** 6.00	**222.5** 8.76	**193.0** 7.60	**320.8** 12.63	N/A	**28.7** 1.13	**24** 1	**41.4** 1.63	**123.7** 4.87	**125.7** 4.95	**75.2** 2.96	**103.1** 4.06	**6.9** 0.27	**116.6** 4.59	**29.9** 66
QMFY20J312S	3 ¾ in.																	
QMFY20J315S	3 15⁄16 in.																	
QMFY20J400S	4 in.																	
QMFY20J100S	**100 mm**																	
QMFY22J110S[4]	**110 mm**	22222	**327.2** 12.88[5]	**160.0** 6.30	**254.0** 10.00	**163.6** 6.44[5]	**384.3** 15.13	N/A	**31.8** 1.25	**24** 1[5]	**46.5** 1.83	**143.5** 5.65	**145.5** 5.73	**94.0** 3.70	**100.3** 3.95	**3.0** 0.12	**140.5** 5.53	**46.3** 102
QMFY22J407S[4]	4 7⁄16 in.																	
QMFY22J408S[4]	4 ½ in.																	
QMFY22J115S[4]	**115 mm**																	
QMFY26J125S[4]	**125 mm**	22226	**355.6** 14.00[5]	**175.0** 6.89	**284.2** 11.19	**177.8** 7.00[5]	**419.1** 16.50	N/A	**38.1** 1.50	**24** 1 1⁄8[5]	**58.7** 2.31	**170.2** 6.70	**172.2** 6.78	**94.7** 3.73	**138.4** 5.45	**16.8** 0.66	**153.4** 6.04	**52.2** 115
QMFY26J415S[4]	4 15⁄16 in.																	
QMFY26J500S[4]	5 in.																	
QMFY26J130S[4]	**130 mm**																	

[1]Pilot tolerance: +0/-0.05 mm (+0/-0.002 in.).
[2]Add (p) to the end of the housing designation in the part number to order with pilot using G dimension.
[3]Piloted flange blocks will be quoted (price and delivery) upon request. For optional spigot on flange side, insert the letter P as seen in the following example: QMFP**J***S.
[4]Six-bolt housing.
NOTE: Housings also are available with a 3/16 in. machined pilot. Please contact your Timken engineer for more information.

QMFX 5000 SERIES SQUARE FLANGE BLOCKS

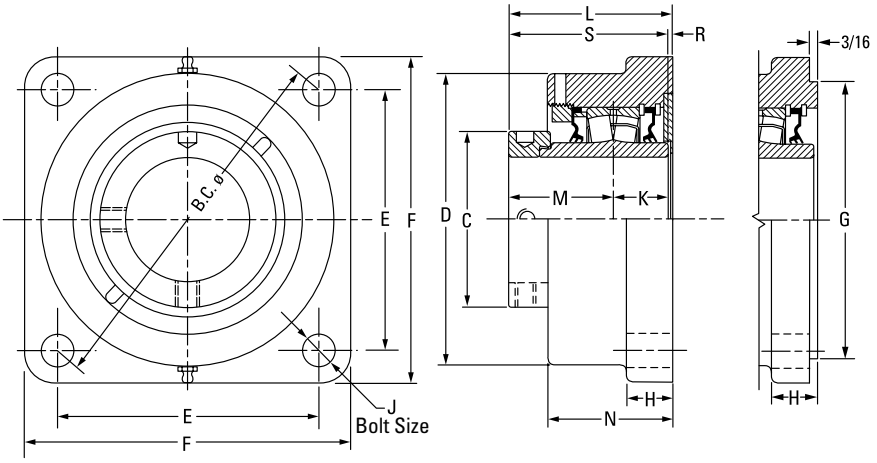

Bearing Part No.	Shaft Dia.	Bearing No.	B.C.	C	D	E	F	G[1][2][3]	H	J	K	L FIX	L EXP	M	N	R	S	Wt.
	mm in.		**mm** in.	**mm** in.	**mm** in.	**mm** in.	**mm** in.	**mm** in.	**mm** in.	**mm** in.	**mm** in.	**mm** in.	**mm** in.	**mm** in.	**mm** in.	**mm** in.	**mm** in.	**mm** in.	**kg** lbs.
QMFX08J035S	**35 mm**	22208	**133.6** 5.26	**59.9** 2.36	**93.7** 3.69	**94.5** 3.72	**117.6** 4.63	**90.50** 3.563	**22.1** 0.88	**12** 1/2	**25.4** 1.00	**72.9** 2.87	**74.9** 2.95	**44.5** 1.75	**57.2** 2.25	**3.0** 0.12	**69.9** 2.75	**4.5** 10
QMFX08J107S	1 7/16 in.																	
QMFX08J108S	1 1/2 in.	22208	**139.7** 5.50	**59.9** 2.36	**108.0** 4.25	**98.8** 3.89	**130.3** 5.13	**103.20** 4.063	**22.1** 0.88	**12** 1/2	**25.4** 1.00	**73.7** 2.90	**75.7** 2.98	**44.5** 1.75	**59.4** 2.34	**3.81** 0.15	**69.9** 2.75	**4.5** 10
QMFX09J040S	**40 mm**	22209	**139.7** 5.50	**66.8** 2.63	**108.0** 4.25	**98.8** 3.89	**130.3** 5.13	**103.20** 4.063	**22.1** 0.88	**12** 1/2	**25.1** 0.99	**79.5** 3.13	**81.5** 3.21	**47.8** 1.88	**63.5** 2.50	**6.4** 0.25	**72.9** 2.87	**5.0** 11
QMFX09J111S	1 11/16 in.																	
QMFX09J112S	1 3/4 in.																	
QMFX09J045S	**45 mm**																	
QMFX10J115S	1 15/16 in.	22210	**146.1** 5.75	**71.4** 2.81	**120.7** 4.75	**103.1** 4.06	**134.9** 5.31	**111.13** 4.375	**22.1** 0.88	**12** 1/2	**24.9** 0.98	**80.8** 3.18	**82.8** 3.26	**48.0** 1.89	**65.0** 2.56	**7.9** 0.31	**72.9** 2.87	**5.0** 11
QMFX10J200S	2 in.																	
QMFX10J050S	**50 mm**																	
QMFX11J203S	2 3/16 in.	22211	**161.5** 6.36	**75.9** 2.99	**130.3** 5.13	**114.3** 4.50	**149.4** 5.88	**127.00** 5.000	**25.4** 1.00	**16** 5/8	**28.7** 1.13	**83.1** 3.27	**85.1** 3.35	**50.5** 1.99	**66.8** 2.63	**3.3** 0.13	**79.2** 3.12	**5.0** 11
QMFX11J204S	2 1/4 in.																	
QMFX11J055S	**55 mm**																	
QMFX13J060S	**60 mm**	22213	**180.8** 7.12	**91.9** 3.62	**146.1** 5.75	**127.8** 5.03	**157.2** 6.19	**138.13** 5.438	**25.4** 1.00	**16** 5/8	**31.5** 1.24	**89.2** 3.51	**91.2** 3.59	**54.1** 2.13	**72.4** 2.85	**3.0** 0.12	**85.6** 3.37	**6.4** 14
QMFX13J207S	2 7/16 in.																	
QMFX13J208S	2 1/2 in.																	
QMFX13J065S	**65 mm**																	
QMFX15J211S	2 11/16 in.	22215	**215.9** 8.50	**102.1** 4.02	**168.9** 6.65	**152.7** 6.01	**189.0** 7.44	**160.35** 6.313	**26.9** 1.06	**20** 3/4	**31.8** 1.25	**96.0** 3.78	**98.0** 3.86	**60.2** 2.37	**76.2** 3.00	**4.1** 0.16	**91.9** 3.62	**7.7** 17
QMFX15J212S	2 3/4 in.																	
QMFX15J070S	**70 mm**																	
QMFX15J215S	2 15/16 in.																	
QMFX15J300S	3 in.																	
QMFX15J075S	**75 mm**																	

[1]Pilot tolerance: +0/-0.05 mm (+0/-0.002 in.).
[2]Add (p) to the end of the housing designation in the part number to order with pilot using G dimension.
[3]Piloted flange blocks will be quoted (price and delivery) upon request. For optional spigot on flange side, insert the letter P as seen in the following example: QMFP**J***S.
[4]Six-bolt round housing.

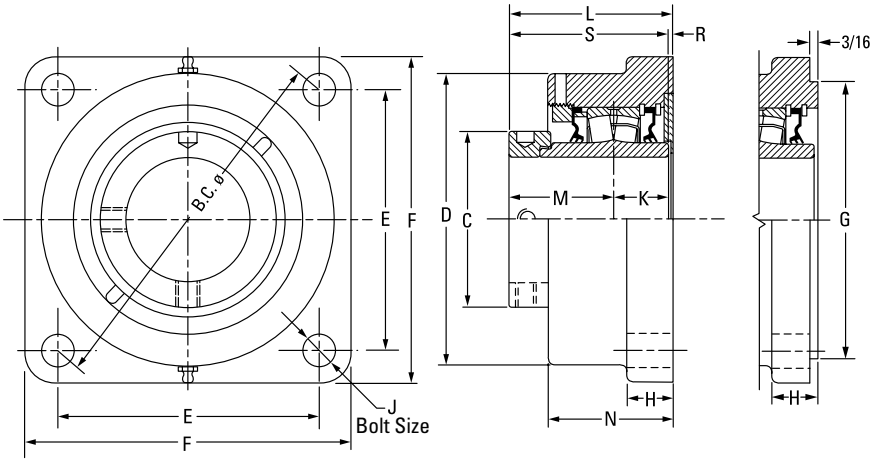

Bearing Part No.	Shaft Dia.	Bearing No.	B.C.	C	D	E	F	G[1][2][3]	H	J	K	L FIX	L EXP	M	N	R	S	Wt.
	mm in.		**mm** in.	**mm** in.	**mm** in.	**mm** in.	**mm** in.	**mm** in.	**mm** in.	**mm** in.	**mm** in.	**mm** in.	**mm** in.	**mm** in.	**mm** in.	**mm** in.	**mm** in.	**kg** lbs.
QMFX18J303S	3 3⁄16 in.	22218	**241.3** 9.50	**120.9** 4.76	**193.8** 7.63	**170.7** 6.72	**212.9** 8.38	**187.33** 7.375	**33.3** 1.31	**20** 3⁄4	**36.6** 1.44	**107.2** 4.22	**109.2** 4.30	**65.8** 2.59	**84.1** 3.31	**4.8** 0.19	**102.4** 4.03	**10.4** 23
QMFX18J304S	3 1⁄4 in.																	
QMFX18J080S	**80 mm**																	
QMFX18J085S	**85 mm**																	
QMFX18J307S	3 7⁄16 in.																	
QMFX18J308S	3 1⁄2 in.																	
QMFX18J090S	**90 mm**																	
QMFX20J311S	3 11⁄16 in.	22220	**298.5** 11.75	**152.4** 6.00	**215.9** 8.50	**211.1** 8.31	**268.2** 10.56	**225.43** 8.875	**38.1** 1.50	**24** 7⁄8	**41.4** 1.63	**126.0** 4.96	**128.0** 5.04	**75.2** 2.96	**103.1** 4.06	**9.4** 0.37	**116.8** 4.60	**15.9** 35
QMFX20J312S	3 3⁄4 in.																	
QMFX20J315S	3 15⁄16 in.																	
QMFX20J400S	4 in.																	
QMFX20J100S	**100 mm**																	
QMFX22J110S[4]	**110 mm**	22222	**327.2** 12.88[1]	**160.0** 6.30	**256.5** 10.10	**163.6** 6.44[1]	**384.3** 15.13	**263.53** 10.375	**31.8** 1.25	**24** 1[1]	**46.5** 1.83	**143.8** 5.66	**145.8** 5.74	**94.0** 3.70	**106.9** 4.21	**3.3** 0.13	**140.5** 5.53	**46.3** 102
QMFX22J407S[4]	4 7⁄16 in.																	
QMFX22J408S[4]	4 1⁄2 in.																	
QMFX22J115S[4]	**115 mm**																	
QMFX26J125S[4]	**125 mm**	22226	**355.6** 14.00[1]	**175.0** 6.89	**284.2** 11.19	**177.8** 7.00[1]	**419.1** 16.50	**284.18** 11.188	**38.1** 1.50	**24** 1 1⁄8[1]	**58.7** 2.31	**172.2** 6.78	**174.2** 6.86	**94.7** 3.73	**135.1** 5.32	**17.3** 0.68	**153.4** 6.04	**52.2** 115
QMFX26J415S[4]	4 15⁄16 in.																	
QMFX26J500S[4]	5 in.																	
QMFX26J130S[4]	**130 mm**																	

[1] Pilot tolerance: +0/-0.05 mm (+0/-0.002 in.).
[2] Add (p) to the end of the housing designation in the part number to order with pilot using G dimension.
[3] Piloted flange blocks will be quoted (price and delivery) upon request. For optional spigot on flange side, insert the letter P as seen in the following example: QMFP**J***S.
[4] Six-bolt round housing.

QMMC CARTRIDGE BLOCKS

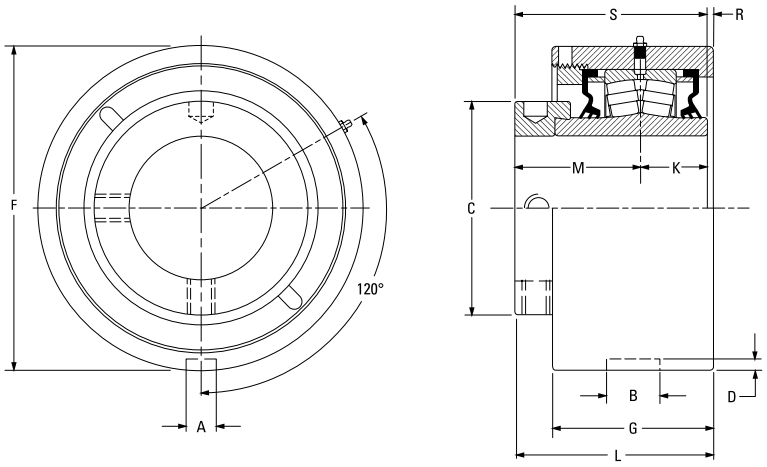

Bearing Part No.	Shaft Dia.	Bearing No.	A	B	C	D	F	G	K	L FIX	L EXP	M	R	S	Wt.
	mm in.		**mm** in.	**mm** in.	**mm** in.	**mm** in.	**mm** in.	**mm** in.	**mm** in.	**mm** in.	**mm** in.	**mm** in.	**mm** in.	**mm** in.	**kg** lbs.
QMMC10J115S	1 15/16 in.	22210	**13.5** 0.53	**23.1** 0.91	**71.4** 2.81	**4.8** 0.19	**104.78 (+0/-0.05)** 4.125 (+0/-0.002)	**62.2** 2.45	**24.9** 0.98	**79.2** 3.12	**81.3** 3.20	**48.0** 1.89	**6.1** 0.24	**72.9** 2.87	**3.6** 8
QMMC10J200S	2 in.														
QMMC10J050S	**50 mm**														
QMMC11J203S	2 3/16 in.	22211	**13.5** 0.53	**23.1** 0.91	**75.9** 2.99	**4.8** 0.19	**115.09 (+0/-0.05)** 4.531 (+0/-0.002)	**65.5** 2.58	**28.7** 1.13	**83.6** 3.29	**85.6** 3.37	**50.5** 1.99	**4.1** 0.16	**79.2** 3.12	**4.5** 10
QMMC11J204S	2 1/4 in.														
QMMC11J055S	**55 mm**														
QMMC13J060S[1]	**60 mm**	22213	**13.5** 0.53	**23.1** 0.91	**91.9** 3.62	**4.8** 0.19	**127.00 (+0/-0.05)** 5.000 (+0/-0.002)	**69.3** 2.73	**31.5** 1.24	**85.6** 3.37	**87.6** 3.45	**54.1** 2.13	**0.0** 0.00	**85.6** 3.37	**5.4** 12
QMMC13J207S[1]	2 7/16 in.														
QMMC13J208S[1]	2 1/2 in.														
QMMC13J065S[1]	**65 mm**														
QMMC15J211S	2 11/16 in.	22215	**15.0** 0.59	**26.2** 1.03	**101.9** 4.01	**6.4** 0.25	**149.225 (+0/-0.05)** 5.875 (+0/-0.002)	**79.8** 3.14	**31.8** 1.25	**100.1** 3.94	**102.1** 4.02	**60.2** 2.37	**8.1** 0.32	**91.9** 3.62	**8.2** 18
QMMC15J212S	2 3/4 in.														
QMMC15J070S	**70 mm**														
QMMC15J215S	2 15/16 in.														
QMMC15J300S	3 in.														
QMMC15J075S	**75 mm**														
QMMC18J303S	3 3/16 in.	22218	**15.0** 0.59	**26.9** 1.06	**120.9** 4.76	**7.1** 0.28	**171.45 (+0/-0.05)** 6.750 (+0/-0.002)	**87.6** 3.45	**36.6** 1.44	**109.7** 4.32	**111.8** 4.40	**65.0** 2.56	**7.4** 0.29	**102.4** 4.03	**11.8** 26
QMMC18J304S	3 1/4 in.														
QMMC18J080S	**80 mm**														
QMMC18J085S	**85 mm**														
QMMC18J307S	3 7/16 in.														
QMMC18J308S	3 1/2 in.														
QMMC18J090S	**90 mm**														
QMMC20J311S	3 11/16 in.	22220	**19.8** 0.78	**32.5** 1.28	**152.4** 6.00	**7.9** 0.31	**206.375 (+0/-0.05)** 8.125 (+0/-0.002)	**105.2** 4.14	**41.4** 1.63	**128.0** 5.039	**130.0** 5.12	**75.2** 2.96	**11.4** 0.45	**116.6** 4.59	**14.5** 32
QMMC20J312S	3 3/4 in.														
QMMC20J315S	3 15/16 in.														
QMMC20J400S	4 in.														
QMMC20J100S	**100 mm**														

[1]The grub screw is located in the external housing nut to secure to the housing.

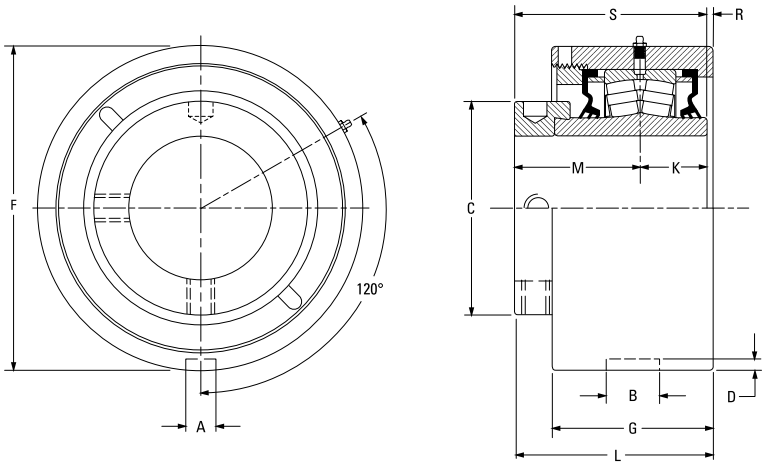

Bearing Part No.	Shaft Dia.	Bearing No.	A	B	C	D	F	G	K	L FIX	L EXP	M	R	S	Wt.
	mm in.		**mm** in.	**mm** in.	**mm** in.	**mm** in.	**mm** in.	**mm** in.	**mm** in.	**mm** in.	**mm** in.	**mm** in.	**mm** in.	**mm** in.	**kg** lbs.
QMMC22J110S	**110 mm**	22222	**19.8** 0.78	**38.1** 1.50	**160.0** 6.30	**7.9** 0.31	**222.25 (+0/-0.08)** 8.75 (+0/-0.003)	**108.5** 4.27	**46.5** 1.83	**148.0** 5.83	**150.1** 5.91	**94.0** 3.70	**7.6** 0.30	**140.5** 5.53	**18.1** 40
QMMC22J407S	4 7⁄16 in.														
QMMC22J408S	4 ½ in.														
QMMC22J115S	**115 mm**														
QMMC26J125S	**125 mm**	22226	**19.8** 0.78	**38.1** 1.50	**175.0** 6.89	**7.9** 0.31	**265.13 (+0/-0.08)** 10.438 (+0/-0.003)	**141.7** 5.58	**58.7** 2.31	**165.4** 6.51	**167.4** 6.59	**94.7** 3.73	**11.9** 0.47	**153.4** 6.04	**31.8** 70
QMMC26J415S	4 15⁄16 in.														
QMMC26J500S	5 in.														
QMMC26J130S	**130 mm**														
QMMC30J507S	5 7⁄16 in.	23230	**19.8** 0.78	**38.1** 1.50	**205.0** 8.07	**5.6** 0.22	**292.10 (+0/-0.08)** 11.500 (+0/-0.003)	**154.4** 6.08	**75.9** 2.99	**188.2** 7.41	**190.2** 7.49	**116.1** 4.57	**-3.8** -0.15	**192.0** 7.56	**88.0** 194
QMMC30J508S	5 ½ in.														
QMMC30J140S	**140 mm**														
QMMC30J515S	5 15⁄16 in.	23230	**19.8** 0.78	**38.1** 1.50	**205.0** 8.07	**5.6** 0.22	**311.15 (+0/-0.08)** 12.250 (+0/-0.003)	**154.4** 6.08	**75.9** 2.99	**188.2** 7.41	**190.2** 7.49	**116.1** 4.57	**-3.8** -0.15	**192.0** 7.56	**87.1** 192
QMMC30J600S	6 in.														
QMMC30J150S	**150 mm**														
QMMC34J607S	6 7⁄16 in.	23234	**19.8** 0.78	**38.1** 1.50	**235.0** 9.25	**5.6** 0.22	**344.50 (+0/-0.08)** 13.563 (+0/-0.003)	**181.1** 7.13	**85.1** 3.35	**219.5** 8.64	**221.5** 8.72	**129.0** 5.08	**5.33** 0.21	**214.1** 8.43	**155.6** 343
QMMC34J608S	6 ½ in.														
QMMC34J170S	**170 mm**														
QMMC34J615S	6 15⁄16 in.														
QMMC34J700S	7 in.														
QMMC34J180S	**180 mm**														

(1)The grub screw is located in the external housing nut to secure to the housing.

QMTU TAKE-UP BLOCKS

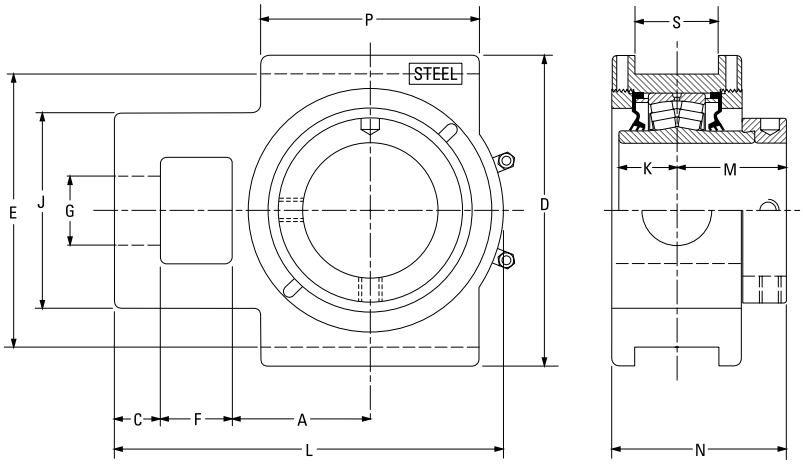

Bearing Part No.	Shaft Dia.	Bearing No.	A	C	D	E	F	G	J	K	L	M	N	P	S	Wt.
	mm in.		**mm** in.	**mm** in.	**mm** in.	**mm** in.	**mm** in.	**mm** in.	**mm** in.	**mm** in.	**mm** in.	**mm** in.	**mm** in.	**mm** in.	**mm** in.	**kg** lbs.
QMTU10J115S	1 15/16 in.	22210	**54.1** 2.13	**19.1** 0.75	**120.7** 4.75	**101.6** 4.00	**26.9** 1.06	**26.9** 1.06	**73.2** 2.88	**24.9** 0.98	**153.4** 6.04	**48.0** 1.89	**76.7** 3.02	**88.9** 3.50	**17.5** 0.69	**7.7** 17
QMTU10J200S	2 in.															
QMTU10J050S	**50 mm**															
QMTU11J203S	2 3/16 in.	22211	**60.5** 2.38	**19.1** 0.75	**133.4** 5.25	**114.3** 4.50	**30.2** 1.19	**30.2** 1.19	**88.9** 3.50	**28.7** 1.13	**167.9** 6.61	**50.5** 1.99	**82.8** 3.26	**95.3** 3.75	**20.6** 0.81	**9.5** 21
QMTU11J204S	2 1/4 in.															
QMTU11J055S	**55 mm**															
QMTU13J060S	**60 mm**	22213	**69.9** 2.75	**22.4** 0.88	**149.4** 5.88	**130.3** 5.13	**33.3** 1.31	**34.9** 1.38	**95.3** 3.75	**31.5** 1.24	**193.8** 7.63	**54.1** 2.13	**90.7** 3.57	**120.7** 4.75	**26.9** 1.06	**12.2** 27
QMTU13J207S	2 7/16 in.															
QMTU13J208S	2 1/2 in.															
QMTU13J065S	**65 mm**															
QMTU15J211S	2 11/16 in.	22215	**76.2** 3.00	**25.4** 1.00	**171.5** 6.75	**150.9** 5.94	**39.6** 1.56	**39.6** 1.56	**108.0** 4.25	**31.8** 1.25	**219.7** 8.65	**60.2** 2.37	**97.0** 3.82	**120.7** 4.75	**46.0** 1.81	**15.9** 35
QMTU15J212S	2 3/4 in.															
QMTU15J070S	**70 mm**															
QMTU15J215S	2 15/16 in.															
QMTU15J300S	3 in.															
QMTU15J075S	**75 mm**															
QMTU18J303S	3 3/16 in.	22218	**92.2** 3.63	**25.4** 1.00	**193.8** 7.63	**173.0** 6.81	**46.0** 1.81	**49.3** 1.94	**124.0** 4.88	**36.6** 1.44	**257.0** 10.12	**65.8** 2.59	**106.4** 4.19	**158.8** 6.25	**46.0** 1.81	**20.0** 44
QMTU18J304S	3 1/4 in.															
QMTU18J080S	**80 mm**															
QMTU18J085S	**85 mm**															
QMTU18J307S	3 7/16 in.															
QMTU18J308S	3 1/2 in.															
QMTU18J090S	**90 mm**															
QMTU20J311S	3 11/16 in.	22220	**104.9** 4.13	**28.7** 1.13	**239.8** 9.44	**219.2** 8.63	**54.1** 2.13	**52.3** 2.06	**143.0** 5.63	**41.4** 1.63	**296.9** 11.69	**75.4** 2.97	**120.4** 4.74	**177.8** 7.00	**52.3** 2.06	**26.3** 58
QMTU20J312S	3 3/4 in.															
QMTU20J315S	3 15/16 in.															
QMTU20J400S	4 in.															
QMTU20J100S	**100 mm**															
QMTU22J110S	**110 mm**	22222	**128.5** 5.06	**38.1** 1.50	**263.7** 10.38	**241.3** 9.50	**54.1** 2.13	**54.1** 2.13	**162.1** 6.38	**46.5** 1.83	**341.4** 13.44	**94.0** 3.70	**143.8** 5.66	**199.9** 7.87	**52.3** 2.06	**36.4** 80
QMTU22J407S	4 7/16 in.															
QMTU22J408S	4 1/2 in.															
QMTU22J115S	**115 mm**															
QMTU26J125S	**125 mm**	22226	**134.9** 5.31	**63.5** 2.50	**285.8** 11.25	**260.4** 10.25	**63.5** 2.50	**60.5** 2.38	**177.8** 7.00	**58.7** 2.31	**396.7** 15.62	**94.7** 3.73	**151.1** 5.95	**228.6** 9.00	**52.3** 2.06	**60.8** 134
QMTU26J415S	4 15/16 in.															
QMTU26J500S	5 in.															
QMTU26J130S	**130 mm**															

NOTE: Please refer to page 257 for take-up frames.

QMTP – TOP ANGLE TAKE-UP BLOCKS

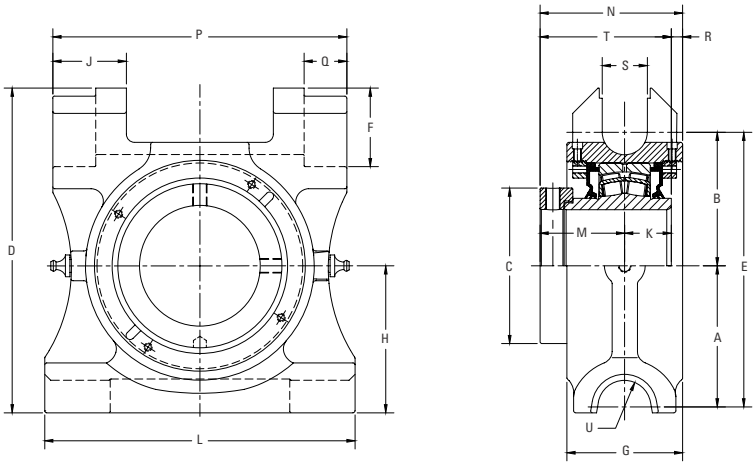

Bearing Part No.	Shaft Dia.	Bearing No.	A	B	C	D	E	F	G	H	J	K	L	M	N	P	Q	R	S	T	U
	mm in.		**mm** in.	**mm** in.	**mm** in.	**mm** in.	**mm** in.	**mm** in.	**mm** in.	**mm** in.	**mm** in.	**mm** in.	**mm** in.	**mm** in.	**mm** in.	**mm** in.	**mm** in.	**mm** in.	**mm** in.	**mm** in.	**mm** in.
QMTP10J115S	1 15/16 in.	22210	**71.4** 2.81	**60.5** 2.38	**71.4** 2.81	**163.6** 6.44	**131.8** 5.19	**42.2** 1.66	**62.7** 2.47	**77.8** 3.06	**41.9** 1.65	**24.9** 0.98	**165.1** 6.50	**48.0** 1.89	**79.3** 3.12	**152.4** 6.00	**20.6** 0.81	**6.4** .025	**22.4** 0.88	**72.9** 2.87	**20.6** 0.81
QMTP10J200S	2 in.																				
QMTP10J050S	**50 mm**																				
QMTP11J203S	2 3/16 in.	22211	**82.6** 3.25	**72.8** 2.87	**79.1** 3.12	**193.8** 7.63	**155.4** 6.12	**49.3** 1.94	**69.9** 2.75	**88.9** 3.50	**44.4** 1.75	**28.6** 1.13	**190.6** 7.50	**50.6** 1.99	**88.3** 3.48	**177.8** 7.00	**26.9** 1.06	**9.1** 0.36	**28.4** 1.12	**79.2** 3.12	**20.6** 0.81
QMTP11J204S	2 1/4 in.																				
QMTP11J055S	**55 mm**																				
QMTP13J207S	2 7/16 in.	22213	**96.8** 3.81	**84.6** 3.33	**91.9** 3.62	**210.3** 8.28	**181.4** 7.14	**47.8** 1.88	**81.0** 3.19	**97.5** 3.84	**44.5** 1.75	**31.5** 1.24	**215.9** 8.50	**54.2** 2.13	**94.7** 3.73	**203.2** 8.00	**26.9** 1.06	**9.0** 0.35	**28.4** 1.12	**85.7** 3.37	**20.6** 0.81
QMTP13J208S	2 1/2 in.																				
QMTP13J060S	**60 mm**																				
QMTP15J211S	2 11/16 in.	22215	**97.0** 3.82	**84.1** 3.31	**101.7** 4.00	**215.9** 8.50	**181.1** 7.13	**49.3** 1.94	**81.0** 3.19	**101.4** 3.99	**44.4** 1.75	**31.8** 1.25	**215.9** 8.50	**60.2** 2.37	**100.7** 3.96	**203.2** 8.00	**26.9** 1.06	**8.7** 0.34	**28.4** 1.12	**92.0** 3.62	**20.6** 0.81
QMTP15J212S	2 3/4 in.																				
QMTP15J070S	**70 mm**																				
QMTP15J215S	2 15/16 in.																				
QMTP15J300S	3 in.																				
QMTP15J075S	**75 mm**																				
QMTP18J303S	3 3/16 in.	22218	**109.7** 4.32	**103.9** 4.09	**121.0** 4.76	**252.5** 9.94	**213.6** 8.41	**61.3** 2.41	**90.0** 3.54	**114.3** 4.50	**57.1** 2.25	**36.3** 1.43	**241.3** 9.50	**65.8** 2.59	**110.9** 4.37	**228.6** 9.00	**33.3** 1.31	**8.8** 0.35	**35.1** 1.38	**102.1** 4.02	**20.6** 0.81
QMTP18J304S	3 1/4 in.																				
QMTP18J080S	**80 mm**																				
QMTP18J085S	**85 mm**																				
QMTP18J307S	3 7/16 in.																				
QMTP18J308S	3 1/2 in.																				
QMTP18J090S	**90 mm**																				
QMTP20J311S	3 11/16 in.	22220	**121.0** 4.76	**117.6** 4.63	**152.5** 6.00	**289.1** 11.38	**238.6** 9.39	**63.5** 2.50	**79.5** 3.13	**139.7** 5.50	**58.7** 2.31	**41.3** 1.63	**279.4** 11.00	**75.5** 2.97	**126.2** 4.97	**266.7** 10.50	**33.3** 1.31	**9.4** 0.37	**35.1** 1.37	**116.8** 4.60	**20.6** 0.81
QMTP20J312S	3 3/4 in.																				
QMTP20J315S	3 15/16 in.																				
QMTP20J400S	4 in.																				
QMTP20J100S	**100 mm**																				

(1)Frame only.

QMMH HANGER BLOCKS

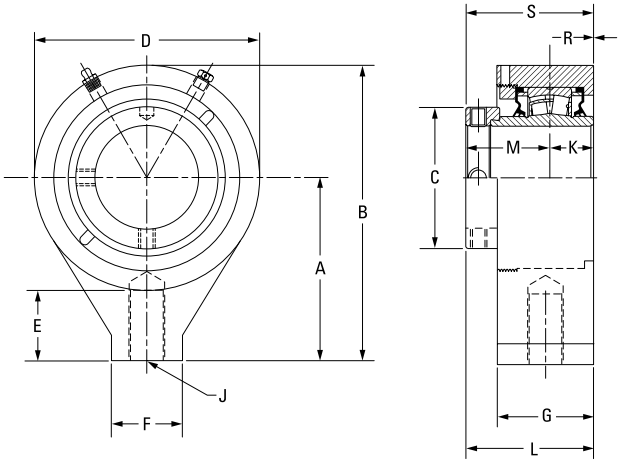

Bearing Part No.	Shaft Dia.	Bearing No.	A	B	C	D	E	F	G	J	K	L	M	R	S	Wt.
	mm in.		**mm** in.	**mm** in.	**mm** in.	**mm** in.	**mm** in.	**mm** in.	**mm** in.	in.	**mm** in.	**mm** in.	**mm** in.	**mm** in.	**mm** in.	**kg** lbs.
QMMH15J211S	2 11/16 in.	22215	**131.8** 5.19	**212.9** 8.38	**101.9** 4.01	**162.1** 6.38	**50.8** 2.00	**50.8** 2.00	**69.9** 2.75	1 -8UNC	**31.8** 1.25	**91.9** 3.62	**60.2** 2.37	**0.0** 0.00	**91.9** 3.62	**10.0** 22
QMMH15J212S	2 3/4 in.															
QMMH15J070S	**70 mm**															
QMMH15J215S	2 15/16 in.															
QMMH15J300S	3 in.															
QMMH15J075S	**75 mm**															
QMMH18J303S	3 3/16 in.	22218	**160.3** 6.31	**260.4** 10.25	**120.9** 4.76	**200.2** 7.88	**63.5** 2.50	**76.2** 3.00	**76.2** 3.00	1 1/4 -7UNC	**36.6** 1.44	**99.3** 3.91	**65.8** 2.59	**3.0** 0.12	**102.4** 4.03	**16.3** 36
QMMH18J304S	3 1/4 in.															
QMMH18J080S	**80 mm**															
QMMH18J085S	**85 mm**															
QMMH18J307S	3 7/16 in.															
QMMH18J308S	3 1/2 in.															
QMMH18J090S	**90 mm**															

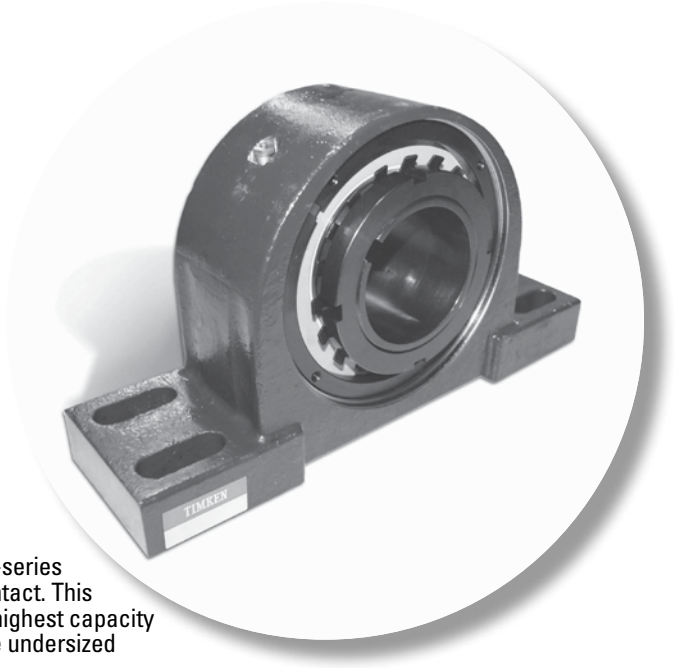

TA/DV TAA/DAA SERIES

The TA/DV and TAA/DAA series feature a 2300-series tapered adapter sleeve for increased shaft contact. This design offers the best shaft concentricity and highest capacity all the while having the ability to accommodate undersized shafting.

The following topics are covered within this section:

Introduction. 212
DVP and DAAP Two-Bolt Pillow Blocks. 213
TAPA and TAAPA SAF-Style Two-Bolt Pillow Blocks 214
TAPN and TAAPN SN-Style Two-Bolt Pillow Blocks 216
TASD and TAASD Special Duty-Style Two-Bolt Pillow Blocks . . . 218
TADI and TAADI DI-Style Two-Bolt Pillow Block 219
TAPKT and TAAPKT 9000 Series Two-Bolt Pillow Blocks 220
DVPF and DAAPF Four-Bolt Pillow Blocks 221
TAPK and TAAPK 9000 Series Four-Bolt Pillow Blocks 222
TA4SD and TAA4SD Special Duty-Style Four-Bolt Pillow Block . . 224
TA4DI and TAA4DI DI-Style Four-Bolt Pillow Block 226
TAPH and TAAPH SAF-Style Four-Bolt Pillow Blocks 228
TAAPH SAF 500-Style Four-Bolt Pillow Blocks 230
TAAPHD SDAF 500-Style Four-Bolt Pillow Blocks 231
TAAPH6 SAF 600-Style Four-Bolt Pillow Blocks 232
TAAPH6D SDAF 600-Style Four Bolt Pillow Blocks 233
TAAPH0 SAF 230-Style Four-Bolt Pillow Blocks 234
TAAPH0 SDAF 230-Style Four-Bolt Pillow Blocks 235
TAAPH1 SDAF 231-Style Four-Bolt Pillow Blocks 236
TAAPG SN-Style Four-Bolt Pillow Blocks 237
TAASN 3000 Series Four-Bolt Pillow Block 239
TAASN 3100 Series Four-Bolt Pillow Block 241
DVC and DAAC Piloted Flange Cartridges 243
TACK and TAACK Piloted Flange Cartridges 245
TAFC and TAAFC Square Piloted Flange Cartridges 247
TAFB and TAAFB Square Flange Blocks 248
TAFNL and TAAFNL Series Flange Blocks. 249
DVF and DAAF Square Flange Blocks 250
DVFBB Bracket Flange Blocks 252
TAFK and TAAFK 9000 Series Square Flange Blocks. 253
TAMC and TAAMC Cartridge Blocks 254
TATU and TAATU Take-Up Units 255

TA/DV TAA/DAA SERIES

TA/TAA SERIES

TA series mounted bearings are a direct drop-in replacement for SAF/SN split-cap housing dimensions.

DV/DAA SERIES

DV series mounted bearings are a drop-in replacement for common American set screw mounted bearings.



Fig. 50. TA/DV series taper adapter insert.



Fig. 51. Double nut tapered adapter insert.

YOU HAVE CHOICES

For the TA/TAA and DV/DAA series, you can select from many seal options and housing styles, which are shown on page 15.

HOUSINGS

- Two-bolt pillow blocks
- Four-bolt pillow blocks
- Flange blocks
- Piloted flange cartridges
- Cartridge blocks

SEALS

- Labyrinth: DuPont™ Teflon® (T)
- Triple-lip: nitrile rubber (M), urethane (O) and Viton® (N)
- Double-lip: nitrile rubber (B) and Viton (C)
- Steel and urethane closed-end covers (CS)
- Steel and urethane open-end covers (CK) with:
  - DuPont Teflon (T)
  - Triple-lip seal (DR)
  - V-ring seal (VR)

DVP AND DAAP TWO-BOLT PILLOW BLOCKS

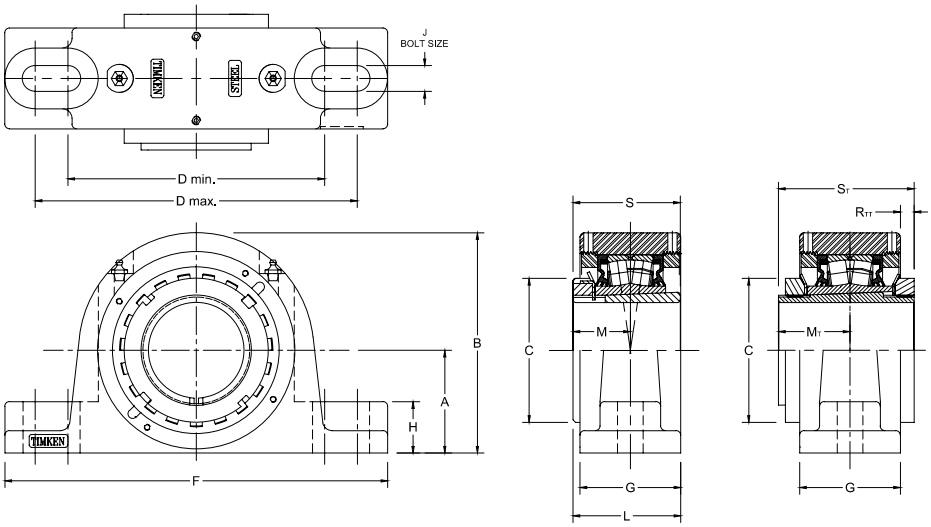

Bearing Part No.	Shaft Dia.	Bearing No.	A	B	C	D min.	D max.	F	G	H	J	L	M	M_T	R_{TT}	S	S_T	Wt.
	mm in.		**mm** in.	**mm** in.	**mm** in.	**mm** in.	**mm** in.	**mm** in.	**mm** in.	**mm** in.	**mm** in.	**mm** in.	**mm** in.	**mm** in.	**mm** in.	**mm** in.	**mm** in.	**kg** lbs.
DVP09K107S DAAP09K107S	1 7⁄16 in.	22209	**47.8** 1.88	**98.6** 3.88	**65.0** 2.56	**119.1** 4.69	**152.4** 6.00	**174.8** 6.88	**53.3** 2.10	**25.4** 1.00	**12** 1⁄2	**57.4** 2.26	**30.7** 1.21			**50.3** 1.98		**4.5** 10
DVP09K108S DAAP09K108S	1 1⁄2 in.	22209	**54.1** 2.13	**104.9** 4.13	**65.0** 2.56	**119.1** 4.69	**165.1** 6.50	**200.2** 7.88	**53.3** 2.10	**25.4** 1.00	**12** 1⁄2	**57.4** 2.26	**30.7** 1.21	**34.2** 1.34	**4.5** 0.18	**50.3** 1.98	**65.33** 2.57	**4.5** 10
DVP09K040S DAAP09K040S	**40 mm**																	
DVP10K111S DAAP10K111S	1 11⁄16 in.	22210	**54.1** 2.13	**114.3** 4.50	**70.1** 2.76	**144.8** 5.70	**165.1** 6.50	**200.2** 7.88	**54.9** 2.16	**31.8** 1.25	**12** 1⁄2	**61.0** 2.40	**33.5** 1.32			**55.1** 2.17		**5.0** 11
DVP10K112S DAAP10K112S	1 3⁄4 in.	22210	**57.2** 2.25	**117.3** 4.62	**70.1** 2.76	**158.8** 6.25	**180.8** 7.12	**225.6** 8.88	**54.9** 2.16	**31.8** 1.25	**16** 5⁄8	**61.0** 2.40	**33.5** 1.32	**37.6** 1.48	**6.3** 0.25	**55.1** 2.17	**71.33** 2.81	**5.0** 11
DVP10K045S DAAP10K045S	**45 mm**																	
DVP11K115S DAAP11K115S	1 15⁄16 in.	22211	**57.2** 2.25	**123.4** 4.86	**74.9** 2.95	**152.4** 6.00	**181.1** 7.13	**225.6** 8.88	**61.7** 2.43	**31.8** 1.25	**16** 5⁄8	**66.5** 2.62	**35.6** 1.40	**39.1** 1.54	**6.4** 0.25	**58.9** 2.32	**76.33** 3.01	**5.9** 13
DVP11K200S DAAP11K200S	2 in.																	
DVP11K050S DAAP11K050S	**50 mm**																	
DVP13K203S DAAP13K203S	2 3⁄16 in.	22213	**63.5** 2.50	**138.9** 5.47	**85.1** 3.35	**165.1** 6.50	**200.0** 7.87	**244.6** 9.63	**70.6** 2.78	**32.8** 1.29	**16** 5⁄8	**74.9** 2.95	**39.6** 1.56	**43.7** 1.72	**3.8** 0.15	**65.0** 2.56	**82.83** 3.26	**9.1** 20
DVP13K204S DAAP13K204S	2 1⁄4 in.																	
DVP13K060S DAAP13K060S	**60 mm**																	
DVP15K207S DAAP15K207S	2 7⁄16 in.	22215	**69.9** 2.75	**149.9** 5.90	**98.0** 3.86	**174.8** 6.88	**219.2** 8.63	**260.4** 10.25	**68.6** 2.70	**35.1** 1.38	**16** 5⁄8	**78.2** 3.08	**43.9** 1.73	**48.7** 1.92	**9.3** 0.37	**73.4** 2.89	**92.33** 3.64	**11.3** 25
DVP15K208S DAAP15K208S	2 1⁄2 in.																	
DVP15K065S DAAP15K065S	**65 mm**																	
DVP17K215S DAAP17K215S	2 15⁄16 in.	22217	**82.6** 3.25	**173.2** 6.82	**110.0** 4.33	**200.2** 7.88	**244.3** 9.62	**295.4** 11.63	**76.2** 3.00	**35.1** 1.38	**20** 3⁄4	**88.1** 3.47	**49.8** 1.96	**50.2** 1.98	**16.0** 0.63	**82.0** 3.23	**104.33** 4.12	**14.5** 32
DVP17K300S DAAP17K300S	3 in.																	
DVP17K075S DAAP17K075S	**75 mm**																	
DVP20K307S DAAP20K307S	3 7⁄16 in.	22220	**95.3** 3.75	**202.7** 7.98	**130.0** 5.12	**238.3** 9.38	**285.8** 11.25	**342.9** 13.50	**85.9** 3.38	**47.8** 1.88	**24** 7⁄8	**101.3** 3.99	**58.4** 2.30	**63.6** 2.51	**15.3** 0.60	**97.0** 3.82	**121.83** 4.80	**25.9** 57
DVP20K308S DAAP20K308S	3 1⁄2 in.																	
DVP20K090S DAAP20K090S	**90 mm**																	
DVP22K315S DAAP22K315S	3 15⁄16 in.	22222	**108.0** 4.25	**223.5** 8.80	**145.0** 5.71	**255.5** 10.06	**317.5** 12.50	**362.0** 14.25	**100.6** 3.96	**38.1** 1.50	**24** 1	**113.3** 4.46	**63.0** 2.48	**65.8** 2.59	**14.6** 0.57	**104.9** 4.13	**130.7** 5.15	**30.4** 67
DVP22K400S DAAP22K400S	4 in.																	
DVP22K100S DAAP22K100S	**100 mm**																	

TAPA AND TAAPA SAF-STYLE TWO-BOLT PILLOW BLOCKS

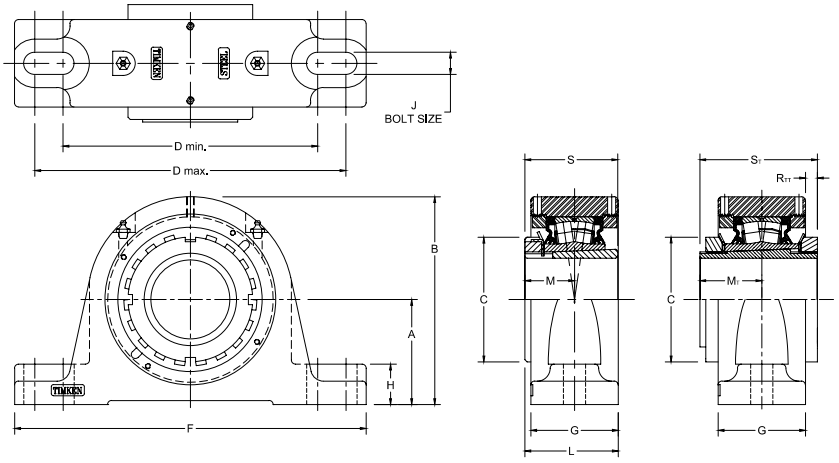

Bearing Part No.	Shaft Dia.	Bearing No.	A	B	C	D min.	D max.	F	G	H	J	L	M	M_T	R_{T1}	S	S_T	Wt.
	mm in.		**mm** in.	**mm** in.	**mm** in.	**mm** in.	**mm** in.	**mm** in.	**mm** in.	**mm** in.	**mm** in.	**mm** in.	**mm** in.	**mm** in.	**mm** in.	**mm** in.	**mm** in.	**kg** lbs.
TAPA09K107S TAAPA09K107S	1 7/16 in.	22209	**57.2** 2.25	**108.0** 4.25	**65.0** 2.56	**158.8** 6.25	**177.8** 7.00	**209.6** 8.25	**53.3** 2.10	**29.0** 1.14	**12** ½	**57.4** 2.26	**30.7** 1.21	**34.2** 1.34	**4.6** 0.18	**50.3** 1.98	**65.33** 2.57	**4.5** 10
TAPA09K108S TAAPA09K108S	1 ½ in.																	
TAPA09K040S TAAPA09K040S	**40 mm**																	
TAPA10K111S TAAPA10K111S	1 11/16 in.	22210	**63.5** 2.50	**123.7** 4.87	**70.1** 2.76	**165.1** 6.50	**177.8** 7.00	**209.6** 8.25	**54.9** 2.16	**31.8** 1.25	**12** ½	**61.0** 2.40	**33.5** 1.32	**37.6** 1.48	**6.3** 0.25	**55.1** 2.17	**71.33** 2.81	**5.9** 13
TAPA10K112S TAAPA10K112S	1 ¾ in.																	
TAPA10K045S TAAPA10K045S	**45 mm**																	
TAPA11K115S TAAPA11K115S	1 15/16 in.	22211	**69.9** 2.75	**135.4** 5.33	**74.9** 2.95	**165.1** 6.50	**221.0** 8.70	**251.0** 9.88	**60.5** 2.38	**31.8** 1.25	**16** 5/8	**65.8** 2.59	**35.6** 1.40	**39.1** 1.54	**7.0** 0.27	**58.9** 2.32	**76.33** 3.01	**7.7** 17
TAPA11K200S TAAPA11K200S	2 in.																	
TAPA11K050S TAAPA11K050S	**50 mm**																	
TAPA13K203S TAAPA13K203S	2 3/16 in.	22213	**76.2** 3.00	**151.1** 5.95	**85.1** 3.35	**182.9** 7.20	**241.3** 9.50	**269.5** 10.61	**68.6** 2.70	**31.2** 1.23	**16** 5/8	**73.9** 2.91	**39.6** 1.56	**43.7** 1.72	**4.8** 0.19	**65.0** 2.56	**82.83** 3.26	**10.4** 23
TAPA13K204S TAAPA13K204S	2 ¼ in.																	
TAPA13K060S TAAPA13K060S	**60 mm**																	
TAPA15K207S TAAPA15K207S	2 7/16 in.	22215	**82.6** 3.25	**163.3** 6.43	**98.0** 3.86	**200.2** 7.88	**244.6** 9.63	**276.4** 10.88	**68.6** 2.70	**31.8** 1.25	**16** 5/8	**78.2** 3.08	**43.9** 1.73	**48.7** 1.92	**9.3** 0.37	**72.9** 2.87	**92.33** 3.64	**12.2** 27
TAPA15K208S TAAPA15K208S	2 ½ in.																	
TAPA15K065S TAAPA15K065S	**65 mm**																	
TAPA16K211S TAAPA16K211S	2 11/16 in.	22216	**88.9** 3.50	**176.7** 6.96	**104.7** 4.12	**228.6** 9.00	**279.4** 11.00	**330.2** 13.00	**72.6** 2.86	**31.8** 1.25	**20** ¾	**83.8** 3.30	**47.5** 1.87	**51.7** 2.04	**11.3** 0.45	**77.8** 3.06	**99.33** 3.91	**13.6** 30
TAPA16K212S TAAPA16K212S	2 ¾ in.																	
TAPA16K070S TAAPA16K070S	**70 mm**																	

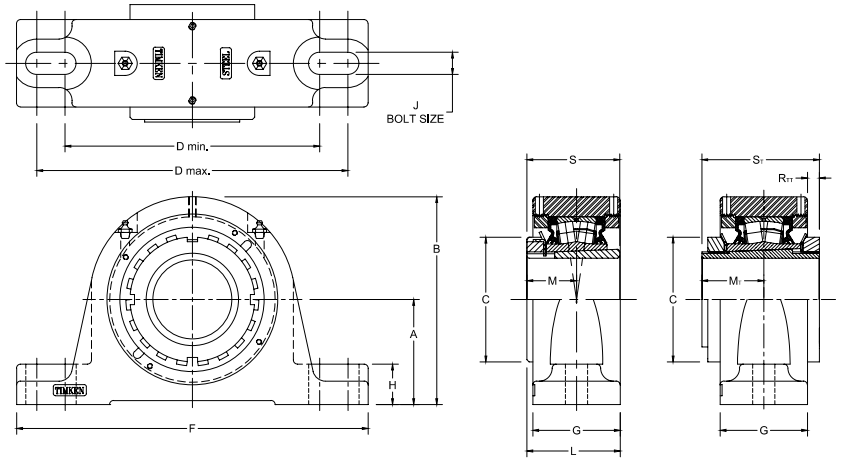

Bearing Part No.	Shaft Dia.	Bearing No.	A	B	C	D min.	D max.	F	G	H	J	L	M	M_T	R_{TT}	S	S_T	Wt.
	mm in.		**mm** in.	**mm** in.	**mm** in.	**mm** in.	**mm** in.	**mm** in.	**mm** in.	**mm** in.	**mm** in.	**mm** in.	**mm** in.	**mm** in.	**mm** in.	**mm** in.	**mm** in.	**kg** lbs.
TAPA17K215S TAAPA17K215S	2 15⁄16 in.	22217	**95.3** 3.75	**185.9** 7.32	**110.0** 4.33	**241.3** 9.50	**279.4** 11.00	**320.8** 12.63	**76.2** 3.00	**33.8** 1.33	**20** ¾	**88.1** 3.47	**49.8** 1.96	**50.2** 1.98	**16.0** 0.63	**82.0** 3.23	**104.33** 4.12	**15.0** 33
TAPA17K300S TAAPA17K300S	3 in.																	
TAPA17K075S TAAPA17K075S	**75 mm**																	
TAPA18K303S TAAPA18K303S	3 3⁄16 in.	22218	**101.6** 4.00	**203.1** 8.00	**119.6** 4.71	**254.0** 10.00	**298.5** 11.75	**349.3** 13.75	**79.8** 3.14	**41.3** 1.63	**20** ¾	**91.9** 3.62	**52.0** 2.05	**56.6** 2.23	**12.3** 0.49	**86.0** 3.39	**108.83** 4.28	**22.2** 49
TAPA18K304S TAAPA18K304S	3 ¼ in.																	
TAPA18K080S TAAPA18K080S	**80 mm**																	
TAPA20K307S TAAPA20K307S	3 7⁄16 in.	22220	**114.3** 4.50	**219.2** 8.63	**130.0** 5.12	**276.4** 10.88	**333.5** 13.13	**374.7** 14.75	**86.9** 3.42	**41.4** 1.63	**24** ⅞	**102.4** 4.03	**58.4** 2.30	**63.6** 2.51	**14.8** 0.58	**97.0** 3.82	**121.83** 4.80	**29.5** 65
TAPA20K308S TAAPA20K308S	3 ½ in.																	
TAPA20K090S TAAPA20K090S	**90 mm**																	
TAPA22K315S TAAPA22K315S	3 15⁄16 in.	22222	**125.5** 4.94	**240.5** 9.47	**145.0** 5.71	**317.5** 12.50	**368.3** 14.50	**406.4** 16.00	**100.6** 3.96	**50.8** 2.00	**24** ⅞	**113.5** 4.47	**63.0** 2.48	**65.8** 2.59	**14.6** 0.57	**104.9** 4.13	**130.7** 5.15	**38.1** 84
TAPA22K400S TAAPA22K400S	4 in.																	
TAPA22K100S TAAPA22K100S	**100 mm**																	
TAPA26K407S TAAPA26K407S	4 7⁄16 in.	22226	**152.4** 6.00	**284.0** 11.18	**165.1** 6.50	**362.0** 14.25	**400.1** 15.75	**444.5** 17.50	**128.0** 5.04	**51.8** 2.04	**24** 1	**135.9** 5.35	**71.9** 2.83	**76.6** 3.01	**9.1** 0.36	**120.9** 4.76	**149.65** 5.89	**61.7** 136
TAPA26K408S TAAPA26K408S	4 ½ in.																	
TAPA26K115S TAAPA26K115S	**115 mm**																	
TAPA28K415S TAAPA28K415S	4 15⁄16 in.	22228	**152.4** 6.00	**297.2** 11.7	**180.1** 7.09	**384.3** 15.13	**441.3** 17.38	**499.9** 19.68	**108.0** 4.25	**51.8** 2.04	**30** 1 ¼	**120.4** 4.74	**77.5** 3.05	**85.2** 3.35	**22.0** 0.86	**131.1** 5.16	**161.15** 6.34	**61.8** 136
TAPA28K500S TAAPA28K500S	5 in.																	
TAPA28K125S TAAPA28K125S	**125 mm**																	

TAPN AND TAAPN SN-STYLE TWO-BOLT PILLOW BLOCKS

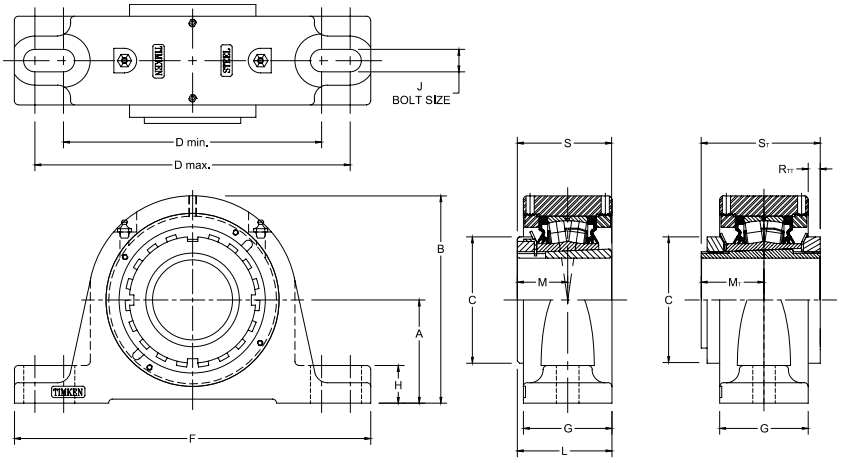

Bearing Part No.[1]	Shaft Dia.	Bearing No.	A	B	C	D min.	D max.	F	G	H	J	L	M	M_T	R_{TT}	S	S_T	Wt.
	mm in.		**mm** in.	**mm** in.	**mm** in.	**mm** in.	**mm** in.	**mm** in.	**mm** in.	**mm** in.	**mm** in.	**mm** in.	**mm** in.	**mm** in.	**mm** in.	**mm** in.	**mm** in.	**kg** lbs.
TAPN09K107S TAAPN09K107S	1 7⁄16 in.	22209	**60.0** 2.362	**108.0** 4.25	**65.0** 2.56	**158.8** 6.25	**177.8** 7.00	**209.6** 8.25	**53.3** 2.10	**29.0** 1.14	**12** 1⁄2	**57.4** 2.26	**30.7** 1.21	**34.2** 1.34	**4.6** 0.18	**50.3** 1.98	**65.33** 2.57	**4.5** 10
TAPN09K108S TAAPN09K108S	1 ½ in.																	
TAPN09K040S TAAPN09K040S	**40 mm**																	
TAPN10K111S TAAPN10K111S	1 11⁄16 in.	22210	**60.0** 2.362	**120.1** 4.73	**70.1** 2.76	**165.1** 6.50	**177.8** 7.00	**209.6** 8.25	**54.9** 2.16	**28.2** 1.11	**12** 1⁄2	**61.0** 2.40	**33.5** 1.32	**37.6** 1.48	**6.3** 0.25	**55.1** 2.17	**71.33** 2.81	**5.9** 13
TAPN10K112S TAAPN10K112S	1 ¾ in.																	
TAPN10K045S TAAPN10K045S	**45 mm**																	
TAPN11K115S TAAPN11K115S	1 15⁄16 in.	22211	**69.9** 2.75	**135.4** 5.33	**74.9** 2.95	**165.1** 6.50	**221.0** 8.70	**251.0** 9.88	**60.5** 2.38	**31.8** 1.25	**16** 5⁄8	**65.8** 2.59	**35.6** 1.40	**39.1** 1.54	**7.0** 0.27	**58.9** 2.32	**76.33** 3.01	**7.7** 17
TAPN11K200S TAAPN11K200S	2 in.																	
TAPN11K050S TAAPN11K050S	**50 mm**																	
TAPN12K055S TAAPN12K055S	**55 mm**	22212	**70.0** 2.756	**140.5** 5.53	**79.8** 3.14	**177.8** 7.00	**219.2** 8.63	**254.0** 10.00	**60.5** 2.38	**31.8** 1.25	**16** 5⁄8	**67.6** 2.66	**37.6** 1.48	**41.1** 1.62	**7.0** 0.27	**62.0** 2.44	**78.33** 3.08	**9.1** 20
TAPN13K203S TAAPN13K203S	2 3⁄16 in.	22213	**80.0** 3.15	**154.9** 6.10	**85.1** 3.35	**182.9** 7.20	**241.3** 9.50	**269.5** 10.61	**68.6** 2.70	**35.1** 1.38	**16** 5⁄8	**73.9** 2.91	**39.6** 1.56	**43.7** 1.72	**4.8** 0.19	**65.0** 2.56	**82.83** 3.26	**10.4** 23
TAPN13K204S TAAPN13K204S	2 ¼ in.																	
TAPN13K060S TAAPN13K060S	**60 mm**																	
TAPN15K207S TAAPN15K207S	2 7⁄16 in.	22215	**80.0** 3.15	**160.8** 6.33	**98.0** 3.86	**200.2** 7.88	**244.6** 9.63	**276.4** 10.88	**68.6** 2.70	**29.2** 1.15	**16** 5⁄8	**78.2** 3.08	**43.9** 1.73	**48.7** 1.92	**9.3** 0.37	**72.9** 2.87	**92.33** 3.64	**12.2** 27
TAPN15K208S TAAPN15K208S	2 ½ in.																	
TAPN15K065S TAAPN15K065S	**65 mm**																	
TAPN16K211S TAAPN16K211S	2 11⁄16 in.	22216	**95.0** 3.74	**180.3** 7.10	**104.6** 4.12	**235.0** 9.25	**266.7** 10.50	**315.0** 12.40	**72.6** 2.86	**31.8** 1.25	**20** 3⁄4	**83.8** 3.30	**47.5** 1.87	**51.7** 2.04	**11.3** 0.45	**78.0** 3.07	**99.33** 3.91	**13.6** 30
TAPN16K212S TAAPN16K212S	2 ¾ in.																	
TAPN16K070S TAAPN16K070S	**70 mm**																	
TAPN17K215S TAAPN17K215S	2 15⁄16 in.	22217	**95.3** 3.75	**185.9** 7.32	**110.0** 4.33	**241.3** 9.50	**279.4** 11.00	**320.8** 12.63	**76.2** 3.00	**33.8** 1.33	**20** 3⁄4	**88.1** 3.47	**49.8** 1.96	**50.2** 1.98	**16.0** 0.63	**82.0** 3.23	**104.33** 4.12	**15.0** 33
TAPN17K300S TAAPN17K300S	3 in.																	
TAPN17K075S TAAPN17K075S	**75 mm**																	

[1]Double-nut (TAA/DAA) part number shown. Single-nut (TA/DV) version available upon request.

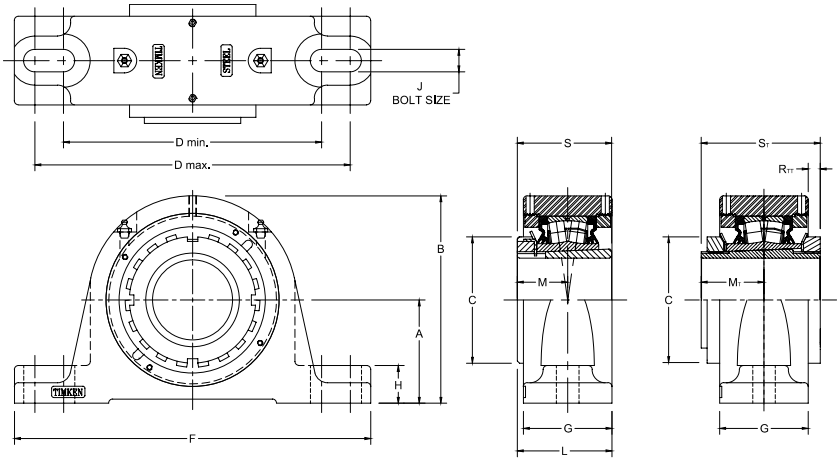

Bearing Part No.[1]	Shaft Dia.	Bearing No.	A	B	C	D min.	D max.	F	G	H	J	L	M	M_T	R_{TT}	S	S_T	Wt.
	mm in.		**mm** in.	**mm** in.	**mm** in.	**mm** in.	**mm** in.	**mm** in.	**mm** in.	**mm** in.	**mm** in.	**mm** in.	**mm** in.	**mm** in.	**mm** in.	**mm** in.	**mm** in.	**kg** lbs.
TAPN18K080S TAAPN18K080S	**80 mm**	22218	**100.0** 3.937	**195.3** 7.69	**119.6** 4.71	**285.8** 11.25	**295.4** 11.63	**346.2** 13.63	**79.8** 3.14	**38.9** 1.53	**20** 3/4	**91.7** 3.61	**52.1** 2.05	**56.6** 2.23	**12.3** 0.49	**86.1** 3.39	**108.83** 4.28	**22.2** 49
TAPN18K303S TAAPN18K303S	3 3/16 in.																	
TAPN18K304S TAAPN18K304S	3 1/4 in.																	
TAPN19K085S TAAPN19K085S	**85 mm**	22219	**112.0** 4.409	**212.3** 8.36	**124.7** 4.91	**285.8** 11.25	**295.4** 11.63	**346.2** 13.63	**82.8** 3.26	**38.9** 1.53	**20** 3/4	**96.0** 3.78	**54.6** 2.15	**59.2** 2.33	**13.2** 0.52	**89.9** 3.54	**113.83** 4.48	**23.1** 51
TAPN20K307S TAAPN20K307S	3 7/16 in.	22220	**112.0** 4.409	**216.9** 8.54	**130.0** 5.12	**276.4** 10.88	**333.5** 13.13	**374.7** 14.75	**86.9** 3.42	**38.9** 1.53	**24** 7/8	**102.4** 4.03	**58.4** 2.30	**63.6** 2.51	**14.8** 0.58	**97.0** 3.82	**121.83** 4.80	**29.5** 65
TAPN20K308S TAAPN20K308S	3 1/2 in.																	
TAPN20K090S TAAPN20K090S	**90 mm**																	
TAPN22K315S TAAPN22K315S	3 15/16 in.	22222	**125.0** 4.921	**240.5** 9.47	**145.0** 5.71	**317.5** 12.50	**368.3** 14.50	**406.4** 16.00	**100.6** 3.96	**50.8** 2.00	**24** 7/8	**113.5** 4.47	**63.0** 2.48	**65.8** 2.59	**14.6** 0.57	**104.9** 4.13	**130.7** 5.15	**38.1** 84
TAPN22K400S TAAPN22K400S	4 in.																	
TAPN22K100S TAAPN22K100S	**100 mm**																	
TAPN24K403S TAAPN24K403S	4 3/16 in.	22224	**140.0** 5.512	**262.9** 10.35	**154.4** 6.08	**344.4** 13.56	**355.6** 14.00	**409.7** 16.13	**97.8** 3.85	**50.8** 2.00	**24** 7/8	**116.1** 4.57	**67.1** 2.64	**71.6** 2.82	**18.7** 0.73	**112.0** 4.41	**139.15** 5.48	**49.9** 110
TAPN24K404S TAAPN24K404S	4 1/4 in.																	
TAPN24K110S TAAPN24K110S	**110 mm**																	
TAPN26K407S TAAPN26K407S	4 7/16 in.	22226	**150.0** 5.906	**281.7** 11.09	**165.1** 6.50	**367.3** 14.46	**400.1** 15.75	**444.5** 17.50	**128.0** 5.04	**49.3** 1.94	**24** 1	**135.9** 5.35	**71.9** 2.83	**76.6** 3.01	**9.1** 0.36	**120.9** 4.76	**149.65** 5.89	**61.7** 136
TAPN26K408S TAAPN26K408S	4 1/2 in.																	
TAPN26K115S TAAPN26K115S	**115 mm**																	
TAPN28K415S TAAPN28K415S	4 15/16 in.	22228	**150.0** 5.906	**288.5** 11.36	**180.1** 7.09	**384.3** 15.13	**441.5** 17.38	**499.9** 19.68	**108.0** 4.25	**49.3** 1.94	**30** 1 1/4	**120.4** 4.74	**77.5** 3.05	**85.2** 3.35	**22.0** 0.86	**131.1** 5.16	**161.15** 6.34	**61.8** 136
TAPN28K500S TAAPN28K500S	5 in.																	
TAPN28K125S TAAPN28K125S	**125 mm**																	

[1]Double-nut (TAA/DAA) part number shown. Single-nut (TA/DV) version available upon request.

TASD AND TAASD SPECIAL DUTY-STYLE TWO-BOLT PILLOW BLOCKS

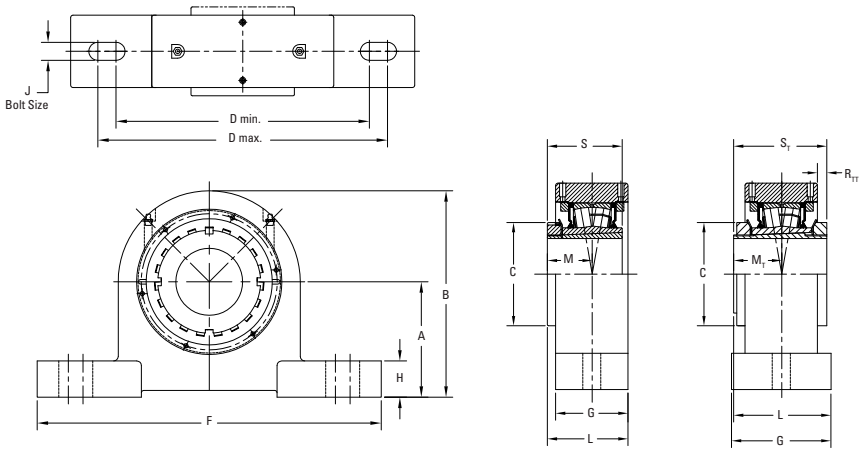

Bearing Part No.[1]	Shaft Dia.	Bearing No.	A	B	C	D min.	D max.	F	G	H	J	L	M	M_T	R_{TT}	S	S_T	Wt.
	mm in.		**mm** in.	**mm** in.	**mm** in.	**mm** in.	**mm** in.	**mm** in.	**mm** in.	**mm** in.	**mm** in.	**mm** in.	**mm** in.	**mm** in.	**mm** in.	**mm** in.	**mm** in.	**kg** lbs.
TASD09K107S TAASD09K107S	1 7⁄16 in.	22209	**73.2** 2.88	**124.0** 4.88	**65.0** 2.56	**174.8** 6.88	**193.8** 7.63	**228.6** 9.00	**51.7** 2.03	**29.0** 1.14	**M12** ½	**56.6** 2.23	**30.7** 1.21	**33.3** 1.31	**6.20** 0.24	**50.2** 1.98	**65.3** 2.42	**6** 14
TASD09K108S TAASD09K108S	1 ½ in.																	
TASD09K040S TAASD09K040S	**40 mm**																	
TASD10K111S TAASD10K111S	1 11⁄16 in.	22210	**79.5** 3.13	**139.7** 5.50	**70.1** 2.76	**192.0** 7.56	**201.7** 7.94	**241.3** 9.50	**51.7** 2.03	**31.8** 1.25	**M12** ½	**59.4** 2.34	**33.5** 1.32	**36.3** 1.43	**9.20** 0.36	**55.0** 2.17	**71.3** 2.64	**7** 16
TASD10K112S TAASD10K112S	1 ¾ in.																	
TASD10K045S TAASD10K045S	**45 mm**																	
TASD11K115S TAASD11K115S	1 15⁄16 in.	22211	**82.6** 3.25	**148.1** 5.83	**74.9** 2.95	**209.6** 8.25	**235.0** 9.25	**279.4** 11.00	**57.5** 2.26	**31.8** 1.25	**M16** ⅝	**64.3** 2.53	**35.6** 1.40	**39.4** 1.55	**8.20** 0.32	**58.9** 2.32	**76.3** 2.80	**9** 19
TASD11K200S TAASD11K200S	2 in.																	
TASD11K050S TAASD11K050S	**50 mm**																	
TASD13K203S TAASD13K203S	2 3⁄16 in.	22213	**95.3** 3.75	**170.2** 6.70	**85.1** 3.35	**231.9** 9.13	**263.7** 10.38	**304.8** 12.00	**70.7** 2.78	**31.8** 1.25	**M16** ⅝	**75.0** 2.95	**39.6** 1.56	**42.4** 1.67	**5.10** 0.20	**65.0** 2.56	**82.8** 3.12	**13** 30
TASD13K204S TAASD13K204S	2 ¼ in.																	
TASD13K060S TAASD13K060S	**60 mm**																	
TASD15K207S TAASD15K207S	2 7⁄16 in.	22215	**101.6** 4.00	**182.4** 7.18	**98.0** 3.86	**254.0** 10.00	**292.1** 11.50	**336.6** 13.25	**70.7** 2.78	**31.8** 1.25	**M20** ¾	**79.3** 3.12	**43.9** 1.73	**47.0** 1.85	**10.0** 0.39	**72.9** 2.87	**92.3** 3.46	**15** 34
TASD15K208S TAASD15K208S	2 ½ in.																	
TASD15K065S TAASD15K065S	**65 mm**																	
TASD17K215S TAASD17K215S	2 15⁄16 in.	22217	**120.7** 4.75	**211.3** 8.32	**110.0** 4.33	**279.4** 11.00	**317.5** 12.50	**362.0** 14.25	**75.7** 2.98	**39.6** 1.56	**M20** ¾	**87.6** 3.45	**49.8** 1.96	**53.6** 2.11	**12.9** 0.51	**82.0** 3.23	**104.3** 3.92	**22** 48
TASD17K300S TAASD17K300S	3 in.																	
TASD17K075S TAASD17K075S	**75 mm**																	
TASD18K080S TAASD18K080S	**80 mm**	22218	**139.7** 5.50	**237.5** 9.35	**119.6** 4.71	**336.6** 13.25	**362.0** 14.25	**425.5** 16.75	**79.7** 3.14	**39.6** 1.56	**M24** ⅞	**91.9** 3.62	**52.1** 2.05	**56.1** 2.21	**12.9** 0.51	**86.1** 3.39	**108.8** 4.10	**28** 62
TASD18K303S TAASD18K303S	3 3⁄16 in.																	
TASD18K304S TAASD18K304S	3 ¼ in.																	
TASD20K307S TAASD20K307S	3 7⁄16 in.	22220	**139.7** 5.50	**247.7** 9.75	**130.0** 5.12	**336.6** 13.25	**362.0** 14.25	**425.5** 16.75	**85.7** 3.38	**69.9** 2.75	**M24** ⅞	**101.3** 3.99	**58.4** 2.30	**62.6** 2.46	**16.4** 0.65	**97.0** 3.82	**121.8** 4.60	**33** 72
TASD20K308S TAASD20K308S	3 ½ in.																	
TASD20K090S TAASD20K090S	**90 mm**																	

[1]Double-nut (TAA) part number shown. Single-nut (TA) version available upon request.

TADI AND TAADI DI-STYLE TWO-BOLT PILLOW BLOCK

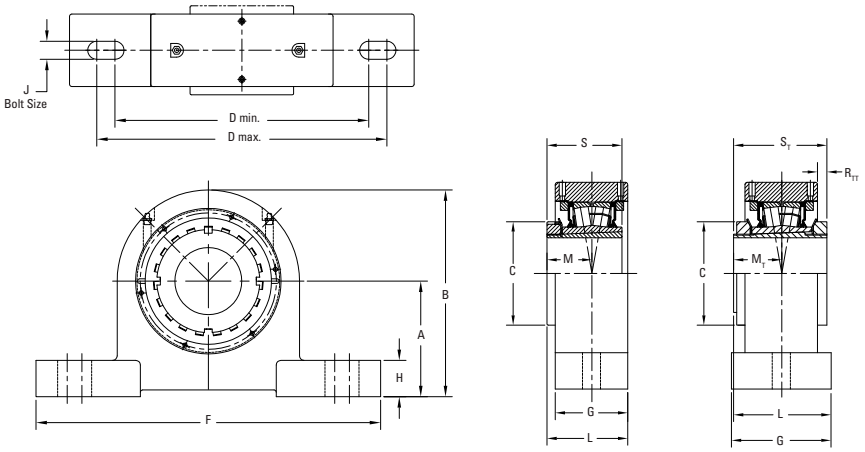

Bearing Part No.	Shaft Dia.	Bearing No.	A	B	C	D min.	D max.	F	G	H	J	L	M	M_T	R_{TT}	S	S_T	Wt.
	mm in.		**mm** in.	**mm** in.	**mm** in.	**mm** in.	**mm** in.	**mm** in.	**mm** in.	**mm** in.	**mm** in.	**mm** in.	**mm** in.	**mm** in.	**mm** in.	**mm** in.	**mm** in.	**kg** lbs.
TADI09K107S TAADI09K107S	1 7⁄16 in.	22209	**60.5** 2.38	**119.8** 4.72	**65.0** 2.56	**158.8** 6.25	**168.4** 6.63	**203.2** 8.00	**51.7** 2.03	**29.0** 1.14	**M12** ½	**56.6** 2.23	**30.7** 1.21			**50.3** 1.98		
TADI09K108S TAADI09K108S	1 ½ in.		**66.8** 2.63	**127.0** 5.00	**65.0** 2.56	**174.8** 6.88	**193.8** 7.63	**228.6** 9.00	**51.7** 2.03	**31.8** 1.25	**M12** ½	**56.6** 2.23	**30.7** 1.21	**33.3** 1.31	**6.20** 0.24	**50.3** 1.98	**65.3** 2.42	**5** 12
TADI09K040S TAADI09K040S	**40 mm**																	
TADI10K111S TAADI10K111S	1 11⁄16 in.	22210	**66.8** 2.63	**127.0** 5.00	**70.1** 2.76	**174.8** 6.88	**193.8** 7.63	**228.6** 9.00	**51.7** 2.03	**31.8** 1.25	**M12** ½	**62.1** 2.45	**33.5** 1.32			**55.1** 2.17		
TADI10K112S TAADI10K112S	1 ¾ in.		**73.2** 2.88	**138.7** 5.46	**70.1** 2.76	**187.5** 7.38	**201.7** 7.94	**254.0** 10.00	**51.7** 2.03	**31.8** 1.25	**M12** ½	**65.3** 2.57	**33.5** 1.32	**36.3** 1.43	**9.2** 0.36	**55.1** 2.17	**71.3** 2.64	**6** 13
TADI10K045S TAADI10K045S	**45 mm**																	
TADI11K115S TAADI11K115S	1 15⁄16 in.	22211	**73.2** 2.88	**138.7** 5.46	**74.9** 2.95	**187.5** 7.38	**201.7** 7.94	**254.0** 10.00	**57.5** 2.26	**31.8** 1.25	**M16** ⅝	**64.3** 2.53	**35.6** 1.40	**39.4** 1.55	**8.2** 0.32	**58.9** 2.32	**76.3** 2.80	**7** 16
TADI11K200S TAADI11K200S	2 in.																	
TADI11K050S TAADI11K050S	**50 mm**																	
TADI13K203S TAADI13K203S	2 3⁄16 in.	22213	**76.2** 3.00	**151.1** 5.95	**85.1** 3.35	**203.2** 8.00	**235.0** 9.25	**279.4** 11.00	**70.71** 2.78	**31.8** 1.25	**M16** ⅝	**77.7** 3.06	**39.6** 1.56			**65.0** 2.56		**11** 25
TADI13K204S TAADI13K204S	2 ¼ in.		**82.6** 3.25	**163.3** 6.43	**85.1** 3.35	**235.0** 9.25	**260.4** 10.25	**304.8** 12.00	**70.71** 2.78	**31.8** 1.25	**M16** ⅝	**82.0** 3.23	**43.9** 1.73	**42.4** 1.67	**5.0** 0.20	**72.9** 2.87	**82.8** 3.12	**13** 30
TADI13K060S TAADI13K060S	**60 mm**																	
TADI15K207S TAADI15K207S	2 7⁄16 in.	22215	**82.6** 3.25	**163.3** 6.43	**98.0** 3.86	**235.0** 9.25	**260.4** 10.25	**304.8** 12.00	**70.71** 2.78	**31.8** 1.25	**M16** ⅝	**82.0** 3.23	**43.9** 1.73	**47.0** 1.85	**9.9** 0.39	**72.9** 2.87	**92.3** 3.46	**13** 29
TADI15K208S TAADI15K208S	2 ½ in.																	
TADI15K065S TAADI15K065S	**65 mm**																	
TADI17K215S TAADI17K215S	2 15⁄16 in.	22217	**95.3** 3.75	**185.9** 7.32	**110.0** 4.33	**251.0** 9.88	**292.1** 11.50	**341.8** 13.46	**75.7** 2.98	**31.8** 1.25	**M20** ¾	**87.9** 1.96	**49.8** 1.96	**53.6** 2.11	**12.9** 0.51	**82.0** 3.23	**104.3** 3.92	**18** 39
TADI17K300S TAADI17K300S	3 in.																	
TADI17K075S TAADI17K075S	**75 mm**																	
TADI18K080S TAADI18K080S	**80 mm**	22218	**114.3** 4.50	**219.2** 8.63	**119.6** 4.71	**325.4** 12.81	**350.8** 13.81	**406.4** 16.00	**79.7** 3.14	**39.6** 1.56	**M24** ⅞	**93.3** 3.68	**52.1** 2.05	**56.1** 2.21	**12.8** 0.51	**86.1** 3.39	**108.8** 4.10	**26** 58
TADI18K303S TAADI18K303S	3 3⁄16 in.																	
TADI18K304S TAADI18K304S	3 ¼ in.																	
TADI20K307S TAADI20K307S	3 7⁄16 in.	22220	**114.3** 4.50	**219.2** 8.63	**130.0** 5.12	**325.4** 12.81	**350.8** 13.81	**406.4** 16.00	**85.7** 3.38	**39.6** 1.56	**M24** ⅞	**102.9** 4.05	**58.4** 2.30	**58.4** 2.30	**16.3** 0.64	**97.0** 3.82	**121.8** 4.60	**27** 60
TADI20K308S TAADI20K308S	3 ½ in.																	
TADI20K090S TAADI20K090S	**90 mm**																	

TAPKT AND TAAPKT 9000 SERIES TWO-BOLT PILLOW BLOCKS

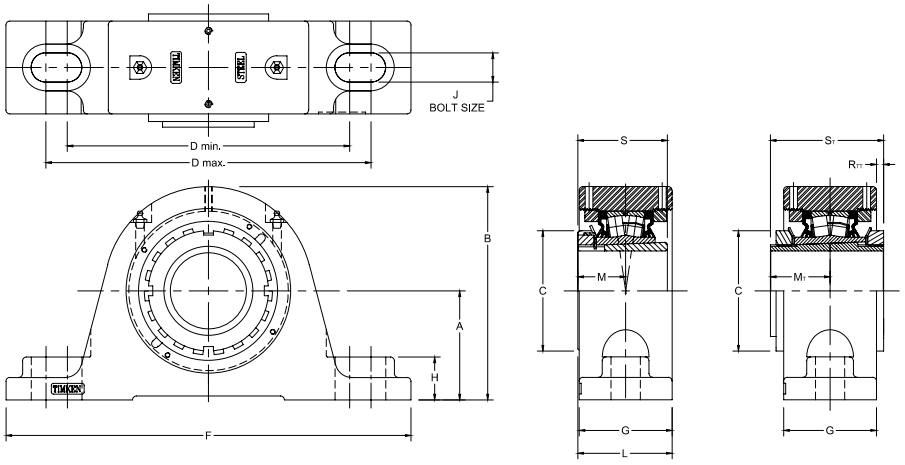

Bearing Part No.	Shaft Dia.	Bearing No.	A	B	C	D min.	D max.	F	G	H	J	L	M	MT	RTT	S	ST	Wt.
	mm in.		**mm** in.	**mm** in.	**mm** in.	**mm** in.	**mm** in.	**mm** in.	**mm** in.	**mm** in.	**mm** in.	**mm** in.	**mm** in.	**mm** in.	**mm** in.	**mm** in.	**mm** in.	**kg** lbs.
TAPKT10K045S TAAPKT10K045S	**45 mm**	22210	**69.9** 2.75	**133.4** 5.25	**70.1** 2.67	**176.3** 6.94	**204.7** 8.06	**260.4** 10.25	**54.9** 2.16	**41.4** 1.63	**16** 5/8	**61.0** 2.4	**33.5** 1.32	**37.6** 1.48	**6.4** 0.25	**55.1** 2.17	**71.3** 2.81	**3.65** 8.02
TAPKT11K115S TAAPKT11K115S	1 15/16 in.	22211																
TAPKT11K200S TAAPKT11K200S	2 in.	22211	**69.9** 2.75	**133.4** 5.25	**74.9** 2.95	**176.3** 6.94	**204.7** 8.06	**260.4** 10.25	**61.8** 2.43	**41.4** 1.63	**16** 5/8	**66.4** 2.62	**35.6** 1.40	**39.1** 1.54	**6.6** 0.26	**58.9** 2.32	**76.3** 3.01	**3.92** 8.63
TAPKT11K050S TAAPKT11K050S	**50 mm**	22211																
TAPKT12K055S TAAPKT12K055S	**55 mm**	22212	**76.2** 3.00	**146.1** 5.75	**79.8** 3.14	**195.3** 7.69	**223.8** 8.81	**285.8** 11.25	**60.5** 2.38	**44.5** 1.75	**20** 3/4	**67.8** 2.67	**37.6** 1.48	**41.1** 1.62	**6.9** 0.27	**62.0** 2.44	**78.3** 3.08	**4.83** 10.63
TAPKT13K203S TAAPKT13K203S	2 3/16 in.	22213																
TAPKT13K204S TAAPKT13K204S	2 1/4 in.	22213	**76.2** 3.00	**153.7** 6.05	**85.1** 3.35	**194.6** 7.66	**223.0** 8.78	**285.8** 11.25	**73.7** 2.90	**35.1** 1.38	**20** 3/4	**76.5** 3.01	**36.6** 1.56	**43.7** 1.72	**2.3** 0.09	**65.0** 2.56	**82.83** 3.26	**10.0** 22
TAPKT13K060S TAAPKT13K060S	**60 mm**	22213																
TAPKT15K207S TAAPKT15K207S	2 7/16 in.	22215																
TAPKT15K208S TAAPKT15K208S	2 1/2 in.	22215	**88.9** 3.50	**173.7** 6.84	**98.0** 3.86	**230.1** 9.06	**265.2** 10.44	**330.2** 13.00	**75.7** 2.98	**35.1** 1.38	**24** 7/8	**81.8** 3.22	**43.9** 1.73	**48.7** 1.92	**5.8** 0.23	**72.9** 2.87	**92.33** 3.64	**12.7** 28
TAPKT15K065S TAAPKT15K065S	**65 mm**	22215																

DVPF AND DAAPF FOUR-BOLT PILLOW BLOCKS

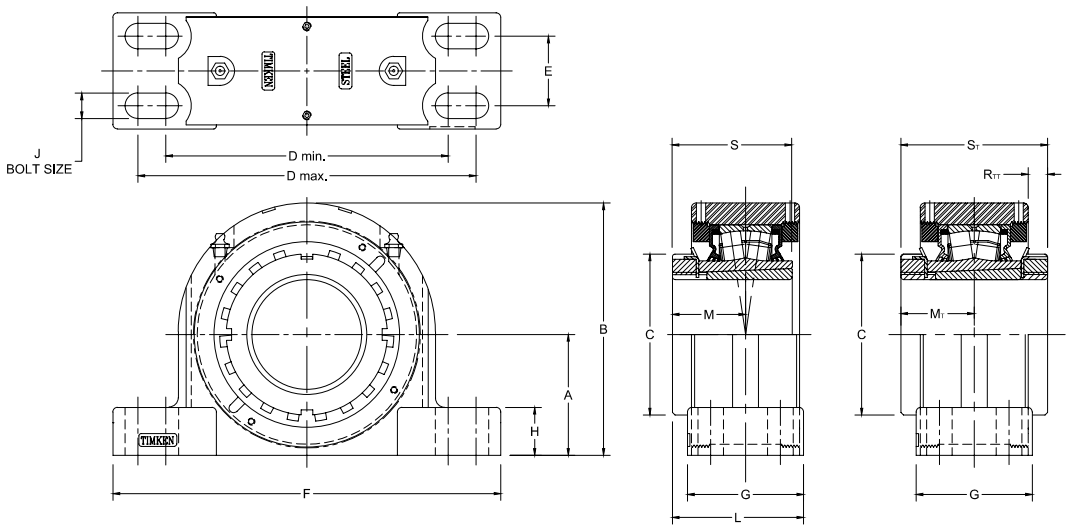

Bearing Part No.	Shaft Dia.	Bearing No.	A	B	C	D min.	D max.	E	F	G	H	J	L	M	M_T	R_{TT}	S	S_T	Wt.
	mm in.		**mm** in.	**mm** in.	**mm** in.	**mm** in.	**mm** in.	**mm** in.	**mm** in.	**mm** in.	**mm** in.	**mm** in.	**mm** in.	**mm** in.	**mm** in.	**mm** in.	**mm** in.	**mm** in.	**kg** lbs.
DVPF17K215S DAAPF17K215S	2 15/16 in.	22217	**82.6** 3.25	**172.5** 6.79	**110.0** 4.33	**193.0** 7.60	**231.1** 9.10	**47.8** 1.88	**265.2** 10.44	**79.5** 3.13	**32.8** 1.29	**16** 5/8	**86.6** 3.41	**49.8** 1.96	**50.2** 1.98	**13.2** 0.52	**82.0** 3.23	**104.33** 4.12	**23.1** 51
DVPF17K300S DAAPF17K300S	3 in.																		
DVPF17K075S DAAPF17K075S	**75 mm**																		
DVPF20K307S DAAPF20K307S	3 7/16 in.	22220	**95.3** 3.75	**200.2** 7.88	**130.0** 5.12	**225.6** 8.88	**276.4** 10.88	**50.8** 2.00	**312.4** 12.30	**95.3** 3.75	**39.6** 1.56	**20** 3/4	**101.3** 3.99	**58.4** 2.30	**63.6** 2.51	**13.8** 0.54	**97.0** 3.82	**121.83** 4.80	**31.8** 70
DVPF20K308S DAAPF20K308S	3 1/2 in.																		
DVPF20K090S DAAPF20K090S	**90 mm**																		
DVPF22K315S DAAPF22K315S	3 15/16 in.	22222	**108.0** 4.25	**223.0** 8.78	**145.0** 5.71	**276.4** 10.88	**339.9** 13.38	**57.2** 2.25	**378.0** 14.88	**109.5** 4.31	**35.6** 1.40	**20** 3/4	**110.7** 4.36	**63.0** 2.48	**65.8** 2.59	**17.3** 0.68	**104.9** 4.13	**130.7** 5.15	**38.6** 85
DVPF22K400S DAAPF22K400S	4 in.																		
DVPF22K100S DAAPF22K100S	**100 mm**																		
DVPF26K407S DAAPF26K407S	4 7/16 in.	22226	**120.7** 4.75	**250.7** 9.87	**165.1** 6.50	**302.3** 11.90	**368.3** 14.50	**63.5** 2.50	**409.7** 16.13	**120.7** 4.75	**40.1** 1.58	**20** 3/4	**123.7** 4.87	**71.9** 2.83	**76.6** 3.01	**16.7** 0.66	**120.1** 4.73	**149.65** 5.89	**62.1** 137
DVPF26K408S DAAPF26K408S	4 1/2 in.																		
DVPF26K115S DAAPF26K115S	**115 mm**																		
DAAPF28K125S	**125 mm**	22228	**139.7** 5.50	**279.7** 11.01	**180.1** 7.09	**349.3** 13.75	**403.4** 15.88	**69.9** 2.75	**444.5** 17.50	**128.0** 5.04	**39.1** 1.54	**24** 7/8	**149.1** 5.87	N/A	**81.8** 3.22	**21.6** 0.85	N/A	**161.1** 6.34	**132.9** 293
DAAPF28K415S	4 15/16 in.																		
DAAPF28K500S	5 in.																		
DAAPF32K140S	**140 mm**	23132[1]	**169.9** 6.69	**330.3** 13.00	**210.0** 8.27	**441.3** 17.38	**489.0** 19.25	**95.3** 3.75	**558.8** 22.00	**171.5** 6.75	**76.2** 3.00	**24** 1	**176.2** 6.94	N/A	**90.5** 3.56	**11.9** 0.47	N/A	**185.0** 7.28	**122.4** 270
DAAPF32K506S	5 3/8 in.																		
DAAPF32K507S	5 7/16 in.																		
DAAPF32K508S	5 1/2 in.																		
DAAPF34K150S	**150 mm**	23134	**169.9** 6.69	**330.3** 13.00	**219.4** 8.64	**441.3** 17.38	**485.8** 19.13	**95.3** 3.75	**558.8** 22.00	**171.5** 6.75	**76.2** 3.00	**24** 1	**179.1** 7.05	N/A	**93.4** 3.68	**10.8** 0.42	N/A	**186.7** 7.35	**132.9** 293
DAAPF34K513S	5 13/16 in.																		
DAAPF34K514S	5 7/8 in.																		
DAAPF34K515S	5 15/16 in.																		
DAAPF34K600S	6 in.																		
DAAPF36K160S	**160 mm**	23136	**160.5** 7.50	**391.2** 15.40	**230.0** 9.06	**530.2** 20.88	**600.1** 23.63	**117.5** 4.63	**660.4** 26.00	**190.5** 7.50	**76.2** 3.00	**24** 1	**194.2** 7.65	N/A	**98.9** 3.90	**14.5** 0.57	N/A	**196.7** 7.74	**157.1** 346.4
DAAPF36K605S	6 5/16 in.																		
DAAPF36K606S	6 3/8 in.																		
DAAPF36K607S	6 7/16 in.																		
DAAPF36K608S	6 1/2 in.																		
DAAPF38K170S	**170 mm**	23138	**160.5** 7.50	**391.2** 15.40	**241.7** 9.51	**530.2** 20.88	**600.1** 23.63	**117.5** 4.63	**660.4** 26.00	**190.5** 7.50	**76.2** 3.00	**24** 1	**200.0** 7.88	N/A	**104.8** 4.13	**11.4** 0.45	N/A	**206.7** 8.14	**170.7** 376.3
DAAPF38K613S	6 13/16 in.																		
DAAPF38K614S	6 7/8 in.																		
DAAPF38K615S	6 15/16 in.																		
DAAPF38K700S	7 in.																		

[1]Insert size 23132K and above come standard with double nut tapered adapter.

TAPK AND TAAPK 9000 SERIES FOUR-BOLT PILLOW BLOCKS

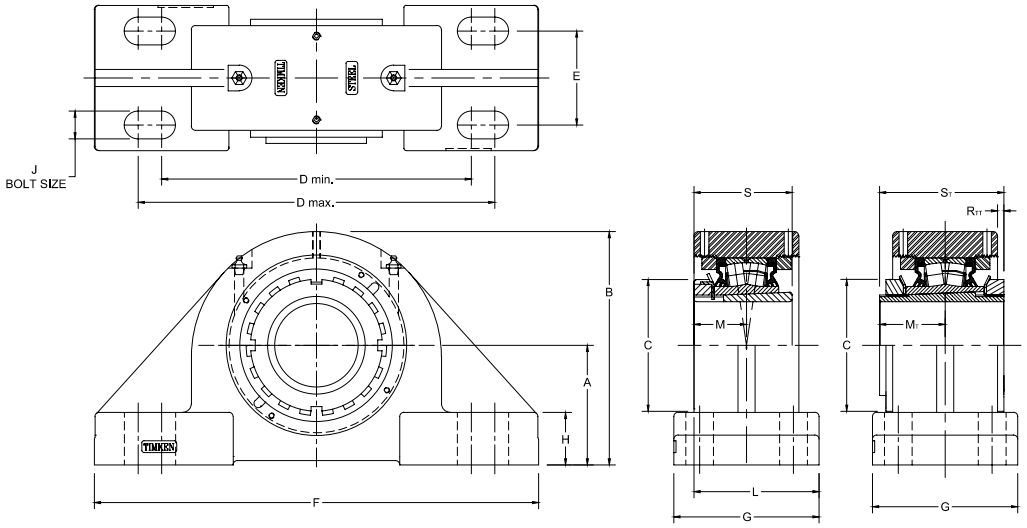

Bearing Part No.	Shaft Dia.	Bearing No.	A	B	C	D min.	D max.	E	F	G	H	J	L	M	MT	RTT	S	ST	Wt.
	mm in.		mm in.	mm in.	mm in.	mm in.	mm in.	mm in.	mm in.	mm in.	mm in.	mm in.	mm in.	mm in.	mm in.	mm in.	mm in.	mm in.	kg lbs.
TAPK10K045S TAAPK10K045S	**45 mm**	22210	**69.9** 2.75	**134.9** 5.31	**70.1** 2.76	**176.3** 6.94	**204.7** 8.06	**57.2** 2.25	**260.4** 10.25	**95.3** 3.75	**25.4** 1.00	**16** 5/8	**81.3** 3.20	**33.5** 1.32	**37.6** 1.48	**3.6** 0.14	**55.1** 2.17	**71.3** 2.81	**7.77** 17.1
TAPK11K115S TAAPK11K115S	1 15/16 in.	22211	**69.9** 2.75	**134.9** 5.31	**74.9** 2.95	**176.3** 6.94	**204.7** 8.06	**57.2** 2.25	**260.4** 10.25	**95.3** 3.75	**25.4** 1.00	**16** 5/8	**85.9** 3.38	**35.6** 1.4	**39.1** 1.54	**7.1** 0.28	**58.9** 2.32	**76.3** 3.01	**7.77** 17.1
TAPK11K200S TAAPK11K200S	2 in.																		
TAPK11K050S TAAPK11K050S	**50 mm**																		
TAPK12K055S TAAPK12K055S	**55 mm**	22212	**76.2** 3.00	**146.8** 5.78	**79.8** 3.14	**195.3** 7.69	**223.8** 8.81	**66.8** 2.63	**285.5** 11.25	**104.9** 4.13	**28.7** 1.13	**16** 5/8	**90.2** 3.55	**37.6** 1.48	**41.1** 1.62	**6.9** 0.27	**62.0** 2.44	**78.3** 3.08	**9.4** 20.9
TAPK13K203S TAAPK13K203S	2 3/16 in.	22213	**76.2** 3.00	**152.4** 6.00	**85.1** 3.35	**195.3** 7.69	**223.8** 8.81	**66.8** 2.63	**285.5** 11.25	**104.9** 4.13	**28.7** 1.13	**16** 5/8	**92.2** 3.63	**39.6** 1.56	**43.7** 1.72	**4.8** 0.19	**65.0** 2.56	**82.8** 3.26	**10.1** 22.2
TAPK15K207S TAAPK15K207S	2 7/16 in.	22215	**88.9** 3.50	**173.5** 6.83	**98.0** 3.86	**230.1** 9.06	**265.2** 10.44	**69.9** 2.75	**330.2** 13.00	**108.0** 4.25	**39.1** 1.54	**20** 3/4	**98.0** 3.86	**43.9** 1.73	**48.7** 1.92	**4.7** 0.18	**72.9** 2.87	**92.33** 3.64	**13.2** 29
TAPK15K208S TAAPK15K208S	2 1/2 in.																		
TAPK15K065S TAAPK15K065S	**65 mm**																		
TAPK16K211S TAAPK16K211S	2 11/16 in.	22216	**101.6** 4.00	**190.5** 7.50	**104.7** 4.12	**274.6** 10.81	**309.6** 12.19	**76.2** 3.00	**381.0** 15.00	**127.0** 5.00	**38.1** 1.50	**20** 3/4	**111.0** 4.37	**47.5** 1.87	**51.7** 2.04	**11.2** 0.44	**77.8** 3.06	**99.3** 3.91	**7.45** 16.4
TAPK17K215S TAAPK17K215S	2 15/16 in.	22217	**101.6** 4.00	**201.2** 7.92	**110.0** 4.33	**274.6** 10.81	**309.6** 12.19	**76.2** 3.00	**381.0** 15.00	**120.7** 4.75	**38.1** 1.50	**20** 3/4	**110.2** 4.34	**49.8** 1.96	**50.2** 1.98	**9.7** 0.38	**82.0** 3.23	**104.33** 4.12	**16.8** 37
TAPK17K300S TAAPK17K300S	3 in.																		
TAPK17K075S TAAPK17K075S	**75 mm**																		
TAPK18K303S TAAPK18K303S	3 3/16 in.	22218	**127.0** 5.00	**228.6** 9.00	**119.6** 4.71	**322.3** 12.69	**350.8** 13.81	**88.9** 3.50	**425.5** 16.75	**139.7** 5.50	**38.1** 1.50	**22** 7/8	**121.9** 4.80	**52.0** 2.05	**56.6** 2.23	**11.9** 0.47	**86.0** 3.39	**108.8** 4.28	**9.91** 21.8
TAPK18K080S TAAPK18K080S	**80 mm**																		

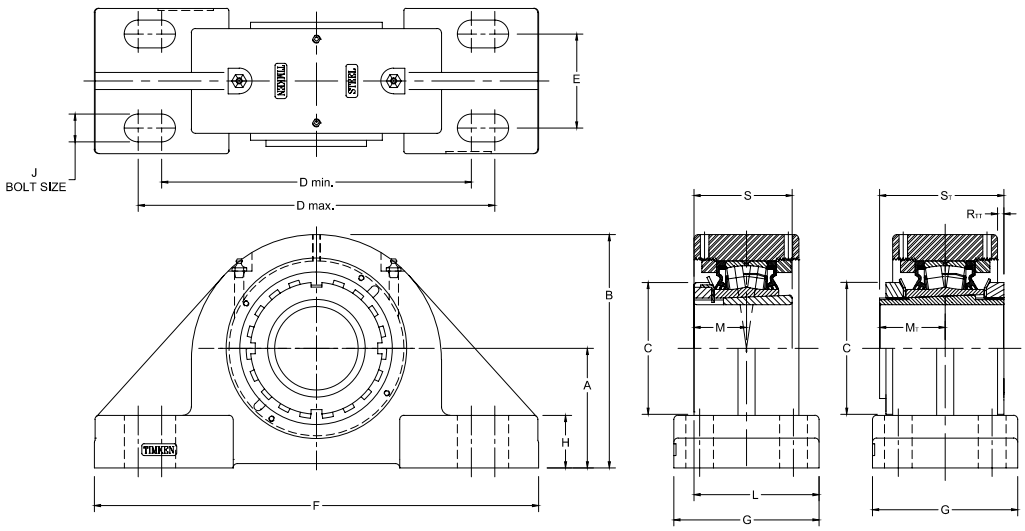

Bearing Part No.	Shaft Dia.	Bearing No.	A	B	C	D min.	D max.	E	F	G	H	J	L	M	M_T	R_{TT}	S	S_T	Wt.
	mm in.		**mm** in.	**mm** in.	**mm** in.	**mm** in.	**mm** in.	**mm** in.	**mm** in.	**mm** in.	**mm** in.	**mm** in.	**mm** in.	**mm** in.	**mm** in.	**mm** in.	**mm** in.	**mm** in.	**mm** in.	**kg** lbs.
TAPK20K307S TAAPK20K307S	3 7/16 in.	22220	**127.0** 5.00	**239.8** 9.44	**130.0** 5.12	**317.5** 12.50	**355.6** 14.00	**88.9** 3.50	**425.5** 16.75	**139.7** 5.50	**41.4** 1.63	**22** 7/8	**128.3** 5.05	**58.4** 2.30	**63.6** 2.51	**8.4** 0.33	**97.0** 3.82	**121.83** 4.80	**31.8** 70
TAPK20K308S TAAPK20K308S	3 1/2 in.																		
TAPK20K090S TAAPK20K090S	**90 mm**																		
TAPK22K315S TAAPK22K315S	3 15/16 in.	22222	**146.1** 5.75	**273.8** 10.78	**145.0** 5.71	**354.1** 13.94	**395.2** 15.56	**101.6** 4.00	**469.9** 18.50	**158.8** 6.25	**45.7** 1.80	**24** 1	**138.2** 5.44	**63.0** 2.48	**65.8** 2.59	**14.1** 0.56	**104.9** 4.13	**130.7** 5.15	**39.5** 87
TAPK22K400S TAAPK22K400S	4 in.																		
TAPK22K100S TAAPK22K100S	**100 mm**																		
TAPK24K403S TAAPK24K403S	4 3/16 in.	22224	**155.7** 6.13	**289.1** 11.38	**154.4** 6.08	**387.4** 15.25	**425.5** 16.75	**108.0** 4.25	**514.4** 20.25	**158.8** 6.25	**47.8** 1.88	**24** 1 1/8	**146.6** 5.77	**67.1** 2.64	**71.6** 2.82	**18.8** 0.74	**112.0** 4.41	**139.2** 5.48	**20.2** 44.4
TAPK26K407S TAAPK26K407S	4 7/16 in.	22226	**155.6** 6.125	**283.2** 11.15	**165.1** 6.50	**387.4** 15.25	**425.5** 16.75	**108.0** 4.25	**514.4** 20.25	**171.5** 6.75	**50.8** 2.00	**24** 1 1/8	**157.5** 6.20	**71.9** 2.83	**76.6** 3.01	**15.9** 0.63	**120.9** 4.76	**149.65** 5.89	**61.7** 136
TAPK26K408S TAAPK26K408S	4 1/2 in.																		
TAPK26K115S TAAPK26K115S	**115 mm**																		
TAPK28K415S TAAPK28K415S	4 15/16 in.	22228	**169.9** 6.69	**322.3** 12.69	**180.1** 7.09	**444.5** 17.50	**485.9** 19.13	**93.7** 3.69	**558.8** 22.00	**157.2** 6.19	**50.8** 2.00	**24** 1 1/8	**156.2** 6.15	**77.5** 3.05	**85.2** 3.35	**22.1** 0.87	**131.1** 5.16	**161.2** 6.34	**28.0** 61.5
TAPK28K500S TAAPK28K500S	5 in.																		
TAPK32K507S TAAPK32K507S	5 7/16 in.	23132	**179.4** 7.06	**338.1** 13.31	**210.0** 8.27	**500.1** 19.69	**541.3** 21.31	**106.4** 4.19	**628.7** 24.75	**171.5** 6.75	**54.1** 2.13	**24** 1 1/8	**176.3** 6.94	–	**90.5** 3.56	**11.9** 0.47	–	**185.0** 7.28	**39.5** 87.0
TAPK34K515S TAAPK34K515S	5 15/16 in.	23134	**200.0** 7.88	**371.6** 14.63	**220.0** 8.66	**563.6** 22.19	**604.8** 23.81	**112.8** 4.44	**711.2** 28.00	**190.5** 7.50	**60.5** 2.38	**30** 1 1/4	**190.0** 7.48	–	**94.7** 3.73	**9.4** 0.37	–	**187.5** 7.38	**43.5** 95.7
TAPK34K600S TAAPK34K600S	6 in.																		
TAPK36K607S TAAPK36K607S	6 7/16 in.	23136	**200.0** 7.88	**381.7** 15.03	**230.0** 9.06	**563.6** 22.19	**604.8** 23.81	**112.8** 4.44	**711.2** 28.00	**190.5** 7.50	**60.5** 2.38	**30** 1 1/4	**194.3** 7.65	–	**99.0** 3.90	**15.0** 0.59	–	**196.7** 7.74	**50.9** 112.0

TA4SD AND TAA4SD SPECIAL DUTY-STYLE FOUR-BOLT PILLOW BLOCK

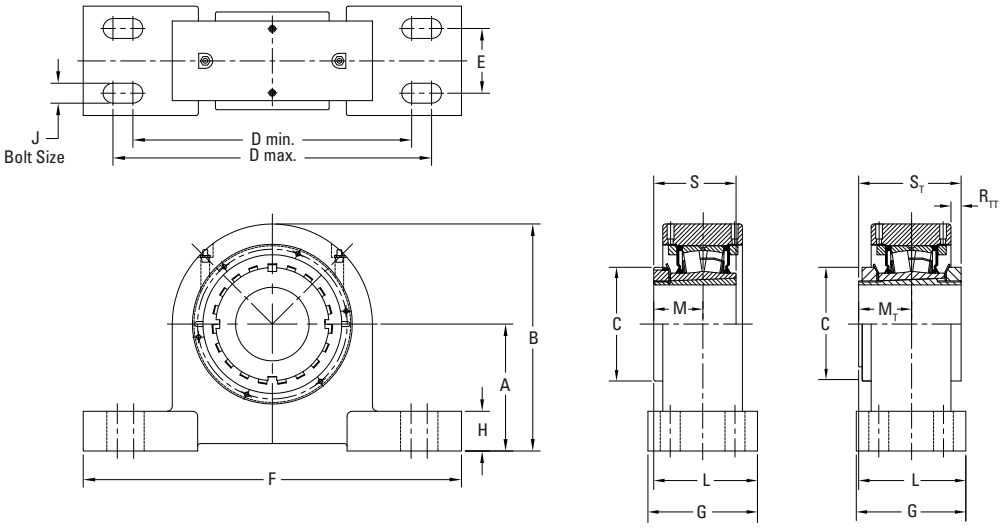

Bearing Part No.	Shaft Dia.	Bearing No.	A	B	C	D min.	D max.	E	F	G	H	J	L	M	M_T	R_{TT}	S	S_T	Wt.
	mm in.		**mm** in.	**mm** in.	**mm** in.	**mm** in.	**mm** in.	**mm** in.	**mm** in.	**mm** in.	**mm** in.	**mm** in.	**mm** in.	**mm** in.	**mm** in.	**mm** in.	**mm** in.	**mm** in.	**kg** lbs.
TA4SD15K207S TAA4SD15K207S	2 7/16 in.	22215	**101.6** 4.00	**182.1** 7.71	**98.04** 3.86	**251.0** 9.88	**295.4** 11.63	**63.5** 2.5	**336.6** 13.25	**103.4** 4.07	**31.8** 1.25	**M16** 5/8	**98.7** 3.89	**43.9** 1.73	**47.0** 1.85	**8.60** 0.34	**72.9** 2.87	**87.9** 3.46	**18** 39
TA4SD15K208S TAA4SD15K208S	2 1/2 in.																		
TA4SD15K065S TAA4SD15K065S	**65 mm**																		
TA4SD17K215S TAA4SD17K215S	2 15/16 in.	22217	**120.7** 4.75	**211.3** 8.32	**110.0** 4.33	**276.4** 10.88	**320.8** 12.63	**69.9** 2.75	**362.0** 14.25	**109.8** 4.32	**31.8** 1.25	**M16** 5/8	**108.5** 4.27	**49.8** 1.96	**53.6** 2.11	**11.9** 0.47	**82.0** 3.23	**99.6** 3.92	**24** 52
TA4SD17K300S TAA4SD17K300S	3 in.																		
TA4SD17K075S TAA4SD17K075S	**75 mm**																		
TA4SD20K307S TAA4SD20K307S	3 7/16 in.	22220	**139.7** 5.50	**254.0** 10	**130.0** 5.12	**330.2** 13.00	**368.3** 14.50	**82.56** 3.25	**425.5** 16.75	**126.5** 4.98	**39.6** 1.56	**M20** 3/4	**119.4** 4.70	**56.1** 2.21	**56.1** 2.21	**15.5** 0.61	**97.0** 3.82	**116.8** 4.60	**39** 87
TA4SD20K308S TAA4SD20K308S	3 1/2 in.																		
TA4SD20K090S TAA4SD20K090S	**90 mm**																		
TA4SD22K315S TAA4SD22K315S	3 15/16 in.	22222	**161.9** 6.38	**285.8** 11.25	**145.0** 5.71	**381.0** 15.00	**406.4** 16.00	**82.56** 3.25	**482.6** 19.00	**133.6** 5.26	**44.5** 1.75	**M24** 7/8	**129.3** 5.09	**63.0** 2.48	**62.5** 2.46	**16.6** 0.66	**105.0** 4.13	**126.0** 4.96	**52** 115
TA4SD22K400S TAA4SD22K400S	4 in.																		
TA4SD22K100S TAA4SD22K100S	**100 mm**																		
TA4SD26K407S TAA4SD26K407S	4 7/16 in.	22226	**184.2** 7.25	**317.5** 12.50	**165.0** 6.50	**393.7** 15.50	**444.5** 17.50	**88.9** 3.5	**508.0** 20.00	**140.0** 5.51	**50.8** 2.00	**M24** 7/8	**143.8** 5.66	**71.9** 2.83	**73.8** 2.91	**20.1** 0.79	**121.0** 4.76	**143.8** 5.66	**67** 148
TA4SD26K408S TAA4SD26K408S	4 1/2 in.																		
TA4SD26K115S TAA4SD26K115S	**115 mm**																		
TA4SD28K415S TAA4SD28K415S	4 15/16 in.	22228	**190.5** 7.50	**342.9** 13.50	**180.0** 7.09	**450.9** 17.75	**501.7** 19.75	**95.3** 3.75	**584.2** 23.00	**152.7** 6.01	**50.8** 2.00	**M24** 1	**155.7** 6.13	**77.5** 3.05	**79.3** 3.12	**10.5** 0.41	**131.0** 5.16	**154.9** 6.10	**89** 196
TA4SD28K500S TAA4SD28K500S	5 in.																		
TA4SD28K125S TAA4SD28K125S	**125 mm**																		
TAA4SD32K140S	**140 mm**	23132[1]	**228.6** 9.00	**400.1** 15.75	**210.0** 8.27	**543.1** 21.38	**600.2** 23.63	**127.0** 5.00	**679.5** 26.75	**190.8** 7.51	**63.5** 2.50	**M24** 1 1/8	**185.8** 7.32	–	**90.5** 3.56	**19.1** 0.75	–	**185.0** 7.28	**150** 331
TAA4SD32K506S	5 3/8 in.																		
TAA4SD32K507S	5 7/16 in.																		
TAA4SD32K508S	5 1/2 in.																		

[1]Insert size 23132K and above come standard with double nut tapered adapter.

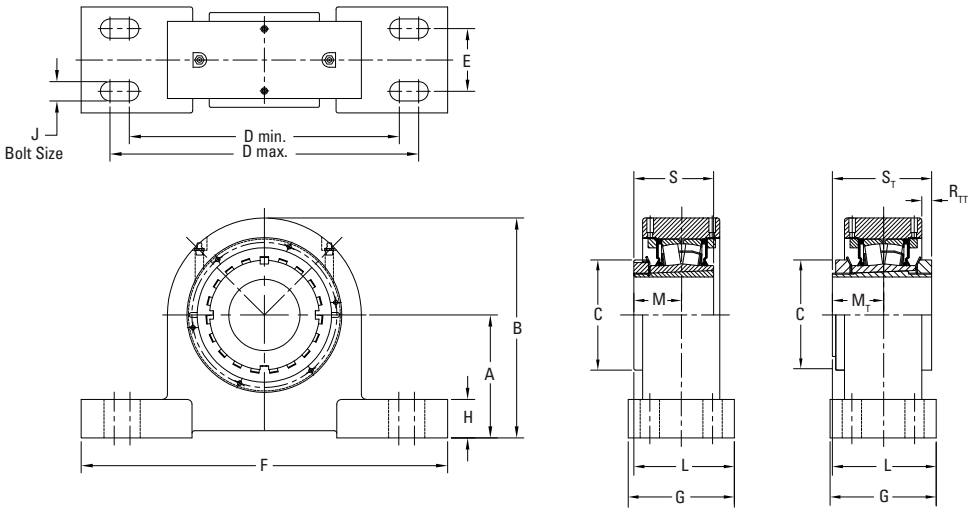

Bearing Part No.	Shaft Dia.	Bearing No.	A	B	C	D min.	D max.	E	F	G	H	J	L	M	M_T	R_{TT}	S	S_T	Wt.
	mm in.		**mm** in.	**mm** in.	**mm** in.	**mm** in.	**mm** in.	**mm** in.	**mm** in.	**mm** in.	**mm** in.	**mm** in.	**mm** in.	**mm** in.	**mm** in.	**mm** in.	**mm** in.	**mm** in.	**kg** lbs.
TAA4SD34K150S	**150 mm**	23134[1]	**228.6** 9.00	**400.1** 15.75	**220.0** 8.66	**543.1** 21.38	**600.2** 23.63	**127.0** 5.00	**679.5** 26.75	**190.8** 7.51	**63.5** 2.50	**M24** 1 1/8	**190.1** 7.49	–	**94.7** 3.73	**15.0** 0.59	–	**187.5** 7.38	**151** 332
TAA4SD34K513S	5 13/16 in.																		
TAA4SD34K514S	5 7/8 in.																		
TAA4SD34K515S	5 15/16 in.																		
TAA4SD34K600S	6 in.																		
TA4SD36K160S TAA4SD36K160S	**160 mm**	23136[1]	**285.8** 11.25	**501.7** 19.75	**230.0** 9.06	**698.5** 27.50	**774.7** 30.50	**139.70** 5.50	**873.3** 34.38	**223.5** 8.80	**69.9** 2.75	**M36** 1 1/2	**210.8** 8.30	–	**99.0** 3.90	**15.8** 0.62	–	**196.7** 7.74	**270** 596
TA4SD36K605S TAA4SD36K605S	6 5/16 in.																		
TA4SD36K606S TAA4SD36K606S	6 3/8 in.																		
TA4SD36K607S TAA4SD36K607S	6 7/16 in.																		
TA4SD36K608S TAA4SD36K608S	6 1/2 in.																		
TA4SD38K170S TAA4SD38K170S	**170 mm**	23138[1]	**285.8** 11.25	**501.7** 19.75	**240** 9.45	**698.5** 27.50	**774.7** 30.50	**139.70** 5.50	**873.3** 34.38	**223.5** 8.80	**69.9** 2.75	**M36** 1 1/2	**216.6** 8.53	–	**104.8** 4.13	**17.0** 0.67	–	**207.6** 8.17	**273** 603
TA4SD38K613S TAA4SD38K613S	6 13/16 in.																		
TA4SD38K614S TAA4SD38K614S	6 7/8 in.																		
TA4SD38K615S TAA4SD38K615S	6 15/16 in.																		
TA4SD38K700S TAA4SD38K700S	7 in.																		
TA4SD44K715S TAA4SD44K715S	**200 mm**	23144[1]	**317.5** 12.50	**558.8** 22.00	**280.0** 11.02	**774.7** 30.50	**863.6** 34.00	**152.4** 6.00	**984.3** 38.75	**260.6** 10.26	**85.1** 3.35	**M42** 1 3/4	**249.2** 9.81	–	**119.0** 4.68	**21.8** 0.86	–	**234.7** 9.24	**380** 838
TA4SD44K715S TAA4SD44K715S	7 13/16 in.																		
TA4SD44K715S TAA4SD44K715S	7 7/8 in.																		
TA4SD44K715S TAA4SD44K715S	7 15/16 in.																		
TA4SD44K800S TAA4SD44K800S	8 in.																		

[1] Insert size 23132K and above come standard with double nut tapered adapter

TA4DI AND TAA4DI DI-STYLE FOUR-BOLT PILLOW BLOCK

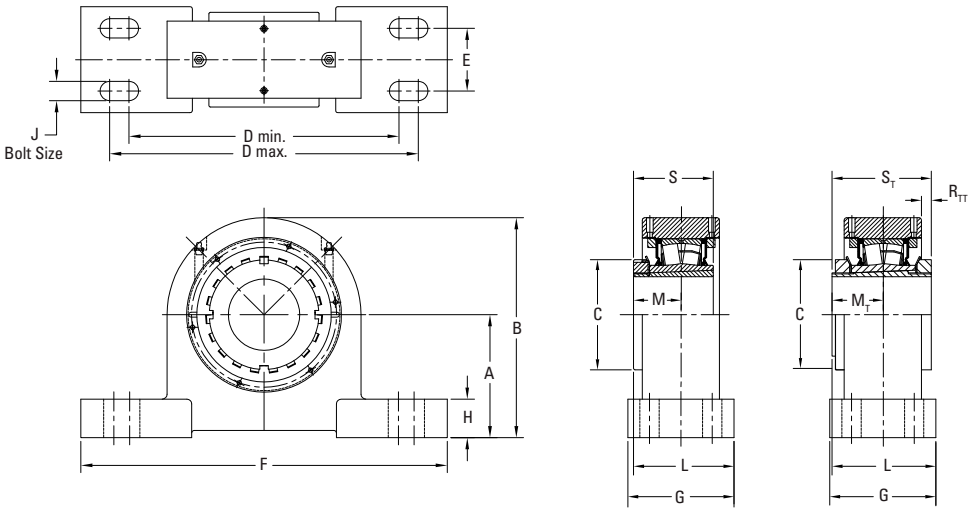

Bearing Part No.	Shaft Dia.	Bearing No.	A	B	C	D min.	D max.	E	F	G	H	J	L	M	M_T	R_{TT}	S	S_T	Wt.
	mm in.		**mm** in.	**mm** in.	**mm** in.	**mm** in.	**mm** in.	**mm** in.	**mm** in.	**mm** in.	**mm** in.	**mm** in.	**mm** in.	**mm** in.	**mm** in.	**mm** in.	**mm** in.	**mm** in.	**kg** lbs.
TA4DI15K207S TAA4DI15K207S	2 7/16 in.	22215	**82.6** 3.25	**162.1** 6.38	**98.0** 3.86	**235.0** 9.20	**260.4** 10.25	**44.5** 1.75	**304.8** 12.00	**76.2** 3.00	**31.8** 1.25	**M12** ½	**78.9** 3.11	**43.9** 1.73	**47.0** 1.85	**8.60** 0.34	**72.9** 2.87	**92.3** 3.46	**14** 30
TA4DI15K208S TAA4DI15K208S	2 ½ in.																		
TA4DI15K065S TAA4DI15K065S	**65 mm**																		
TA4DI17K215S TAA4DI17K215S	2 15/16 in.	22217	**95.3** 3.75	**185.7** 7.32	**110.0** 4.33	**250.8** 9.88	**292.1** 11.50	**47.6** 1.88	**341.4** 13.44	**88.9** 3.50	**31.8** 1.25	**M16** 5/8	**94.2** 3.71	**49.8** 1.96	**53.6** 2.11	**11.9** 0.47	**82.0** 3.23	**104.3** 3.92	**19** 42
TA4DI17K300S TAA4DI17K300S	3 in.																		
TA4DI17K075S TAA4DI17K075S	**75 mm**																		
TA4DI20K307S TAA4DI20K307S	3 7/16 in.	22220	**114.3** 4.50	**220.4** 8.68	**130.0** 5.12	**325.4** 12.81	**350.8** 13.81	**50.8** 2.00	**406.4** 16.00	**95.3** 3.75	**39.6** 1.56	**M20** ¾	**106.0** 4.18	**58.4** 2.30	**56.1** 2.21	**15.5** 0.61	**97.0** 3.82	**108.8** 4.10	**29** 65
TA4DI20K308S TAA4DI20K308S	3 ½ in.																		
TA4DI20K090S TAA4DI20K090S	**90 mm**																		
TA4DI22K315S TAA4DI22K315S	3 15/16 in.	22222	**127.0** 5.00	**250.8** 9.88	**145.0** 5.71	**333.4** 13.13	**374.7** 14.75	**50.8** 2.00	**443.0** 17.44	**101.6** 4.00	**44.5** 1.75	**M20** ¾	**113.8** 4.48	**63.0** 2.48	**62.5** 2.46	**16.6** 0.66	**105.0** 4.13	**121.8** 4.60	**40** 88
TA4DI22K400S TAA4DI22K400S	4 in.																		
TA4DI22K100S TAA4DI22K100S	**100 mm**																		
TA4DI26K407S TAA4DI26K407S	4 7/16 in.	22226	**146.1** 5.75	**279.4** 11.00	**165.0** 6.50	**365.1** 14.38	**412.8** 16.25	**57.2** 2.25	**482.6** 19.00	**114.3** 4.50	**50.8** 2.00	**M20** ¾	**122.7** 4.83	**71.9** 2.83	**73.9** 2.91	**20.1** 0.79	**121.0** 4.76	**121.0** 4.76	**54** 118
TA4DI26K408S TAA4DI26K408S	4 ½ in.																		
TA4DI26K115S TAA4DI26K115S	**115 mm**																		

(1) Insert size 23132K and above come standard with double nut tapered adapter

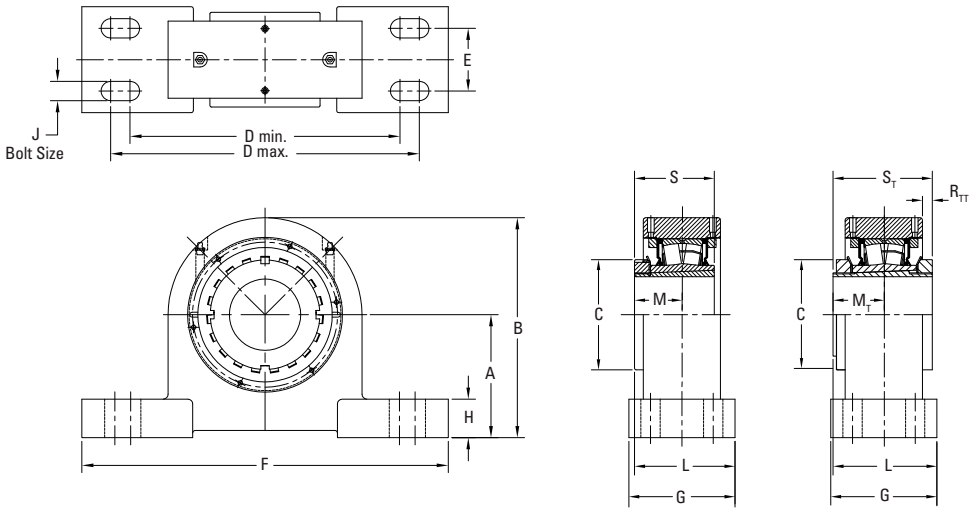

Bearing Part No.	Shaft Dia.	Bearing No.	A	B	C	D min.	D max.	E	F	G	H	J	L	M	M_T	R_{TT}	S	S_T	Wt.
	mm in.		**mm** in.	**mm** in.	**mm** in.	**mm** in.	**mm** in.	**mm** in.	**mm** in.	**mm** in.	**mm** in.	**mm** in.	**mm** in.	**mm** in.	**mm** in.	**mm** in.	**mm** in.	**mm** in.	**kg** lbs.
TA4DI28K415S TAA4DI28K415S	4 15⁄16 in.	22228	**158.8** 6.25	**311.2** 12.25	**180.0** 7.09	**393.7** 15.50	**458.7** 18.06	**63.5** 2.50	**520.7** 20.50	**120.4** 4.74	**50.8** 2.00	**M24** 7⁄8	**134.6** 5.30	**77.5** 3.05	**79.3** 3.12	**10.5** 0.41	**131.0** 5.16	**131.0** 5.16	**72** 159
TA4DI28K500S TAA4DI28K500S	5 in.																		
TA4DI28K125S TAA4DI28K125S	**125 mm**																		
TAA4DI32K140S	**140 mm**	23132[1]	**181.1** 7.13	**352.6** 13.88	**210.0** 8.27	**482.6** 19.00	**524.0** 20.63	**76.2** 3.00	**601.7** 23.69	**165.1** 6.50	**63.5** 2.50	**M24** 1	**168.7** 6.64	-	**90.5** 3.56	**19.1** 0.75	-	**185.0** 7.28	**119** 263
TAA4DI32K506S	5 3⁄8 in.																		
TAA4DI32K507S	5 7⁄16 in.																		
TAA4DI32K508S	5 1⁄2 in.																		
TAA4DI34K150S	**150 mm**	23134[1]	**181.1** 7.13	**352.6** 13.88	**220.0** 8.66	**482.6** 19.00	**524.0** 20.63	**76.2** 3.00	**601.7** 23.69	**167.6** 6.60	**63.5** 2.50	**M24** 1	**169.6** 6.68	-	**94.7** 3.73	**15.0** 0.59	-	**186.7** 7.35	**120** 264
TAA4DI34K513S	5 13⁄16 in.																		
TAA4DI34K514S	5 7⁄8 in.																		
TAA4DI34K515S	5 15⁄16 in.																		
TAA4DI34K600S	6 in.																		

[1]Insert size 23132K and above come standard with double nut tapered adapter

TAPH AND TAAPH SAF-STYLE FOUR-BOLT PILLOW BLOCKS

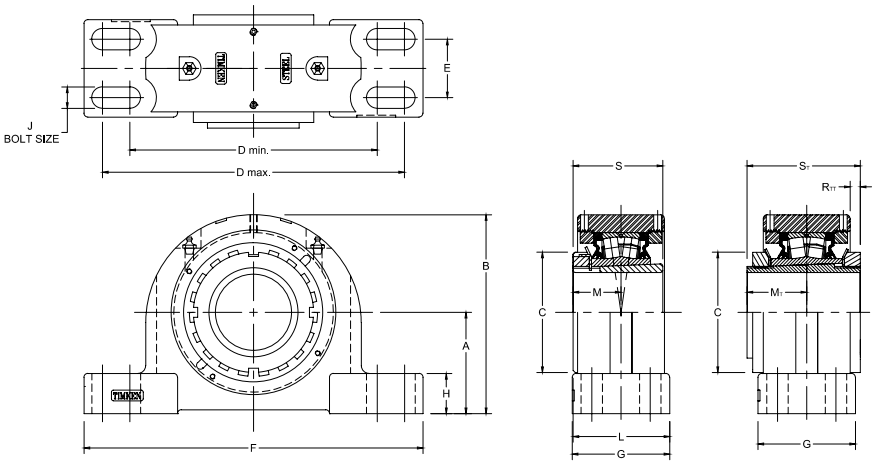

Bearing Part No.	Shaft Dia.	Bearing No.	A	B	C	D min.	D max.	E	F	G	H	J	L	M	M_T	R_{TT}	S	S_T	Wt.
	mm in.		**mm** in.	**mm** in.	**mm** in.	**mm** in.	**mm** in.	**mm** in.	**mm** in.	**mm** in.	**mm** in.	**mm** in.	**mm** in.	**mm** in.	**mm** in.	**mm** in.	**mm** in.	**mm** in.	**mm** lbs.
TAPH11K115S TAAPH11K115S	1 15/16 in.	22211	**69.9** 2.75	**134.9** 5.31	**74.9** 2.95	**182.4** 7.18	**217.4** 8.56	**39.9** 1.57	**251.0** 9.88	**68.6** 2.70	**31.8** 1.25	**16** 5/8	**69.9** 2.75	**35.6** 1.40	**39.1** 1.54	**7.1** 0.28	**58.9** 2.32	**76.33** 3.01	**8.6** 19
TAPH11K200S TAAPH11K200S	2 in.																		
TAPH11K050S TAAPH11K050S	**50 mm**																		
TAPH13K203S TAAPH13K203S	2 3/16 in.	22213	**76.2** 3.00	**151.1** 5.95	**85.1** 3.35	**182.4** 7.18	**217.4** 8.56	**50.8** 2.00	**261.9** 10.31	**82.6** 3.25	**31.2** 1.23	**12** 1/2	**81.0** 3.19	**39.6** 1.56	**43.7** 1.72	**5.1** 0.20	**65.0** 2.56	**82.83** 3.26	**11.3** 25
TAPH13K204S TAAPH13K204S	2 1/4 in.																		
TAPH13K060S TAAPH13K060S	**60 mm**																		
TAPH15K207S TAAPH15K207S	2 7/16 in.	22215	**82.6** 3.25	**162.1** 6.38	**98.0** 3.86	**201.7** 7.94	**246.1** 9.69	**47.8** 1.88	**276.4** 10.88	**79.5** 3.13	**32.8** 1.29	**12** 1/2	**83.6** 3.29	**43.9** 1.73	**48.7** 1.92	**8.3** 0.33	**72.9** 2.87	**92.33** 3.64	**13.2** 29
TAPH15K208S TAAPH15K208S	2 1/2 in.																		
TAPH15K065S TAAPH15K065S	**65 mm**																		
TAPH16K211S TAAPH16K211S	2 11/16 in.	22216	**88.9** 3.50	**176.6** 6.96	**104.7** 4.12	**228.6** 9.00	**279.4** 11.00	**53.9** 2.13	**330.2** 13.00	**88.9** 3.50	**31.7** 1.25	**16** 5/8	**91.7** 3.61	**47.5** 1.87	**51.7** 2.04	**11.3** 0.45	**77.7** 3.06	**99.33** 3.91	**14.5** 32
TAPH16K212S TAAPH16K212S	2 3/4 in.																		
TAPH16K070S TAAPH16K070S	**70 mm**																		
TAPH17K215S TAAPH17K215S	2 15/16 in.	22217	**95.3** 3.75	**182.9** 7.20	**110.0** 4.33	**239.8** 9.44	**287.3** 11.31	**53.9** 2.13	**320.8** 12.63	**92.2** 3.63	**32.0** 1.26	**16** 5/8	**96.0** 3.78	**49.8** 1.96	**50.2** 1.98	**16.0** 0.63	**82.0** 3.23	**104.33** 4.12	**16.8** 37
TAPH17K300S TAAPH17K300S	3 in.																		
TAPH17K075S TAAPH17K075S	**75 mm**																		
TAPH18K303S TAAPH18K303S	3 3/16 in.	22218	**101.6** 4.00	**202.1** 7.96	**119.6** 4.71	**254.0** 10.00	**298.5** 11.75	**54.0** 2.13	**349.3** 13.75	**98.4** 3.88	**41.3** 1.63	**16** 5/8	**101.2** 3.98	**52.0** 2.05	**56.6** 2.23	**12.3** 0.49	**86.0** 3.39	**108.83** 4.28	**19.1** 42
TAPH18K304S TAAPH18K304S	3 1/4 in.																		
TAPH18K080S TAAPH18K080S	**80 mm**																		

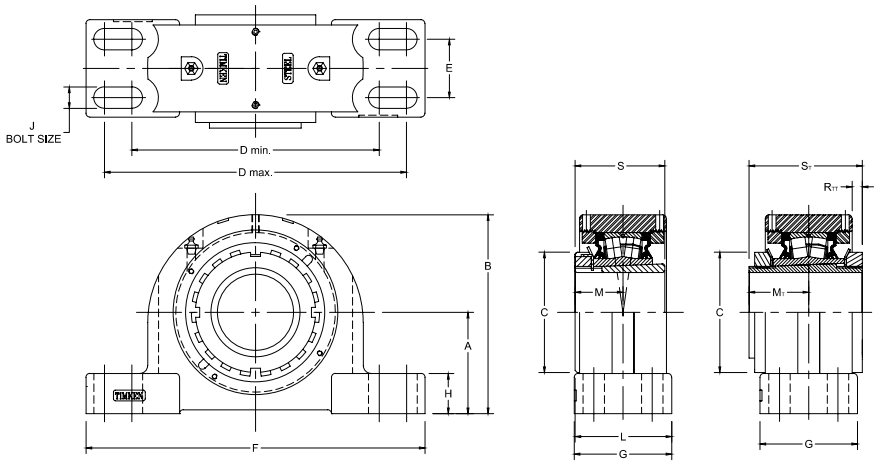

Bearing Part No.	Shaft Dia.	Bearing No.	A	B	C	D min.	D max.	E	F	G	H	J	L	M	Mт	Rтт	S	Sт	Wt.
	mm in.		**mm** in.	**mm** in.	**mm** in.	**mm** in.	**mm** in.	**mm** in.	**mm** in.	**mm** in.	**mm** in.	**mm** in.	**mm** in.	**mm** in.	**mm** in.	**mm** in.	**mm** in.	**mm** in.	**mm** lbs.
TAPH20K307S TAAPH20K307S	3 7/16 in.	22220	**114.3** 4.50	**216.9** 8.54	**130.0** 5.12	**276.4** 10.88	**339.9** 13.38	**60.5** 2.38	**381** 15.00	**109.5** 4.31	**41.9** 1.65	**20** 3/4	**113.3** 4.46	**58.4** 2.30	**63.6** 2.51	**10.6** 0.42	**97.0** 3.82	**121.83** 4.80	**31.8** 70
TAPH20K308S TAAPH20K308S	3 1/2 in.																		
TAPH20K090S TAAPH20K090S	**90 mm**																		
TAPH22K315S TAAPH22K315S	3 15/16 in.	22222	**125.5** 4.94	**238.3** 9.38	**145.0** 5.71	**301.8** 11.88	**368.3** 14.50	**69.9** 2.75	**406.4** 16.00	**120.7** 4.75	**45.0** 1.77	**20** 3/4	**123.4** 4.86	**63.0** 2.48	**65.8** 2.59	**14.1** 0.56	**104.9** 4.13	**130.7** 5.15	**39.5** 87
TAPH22K400S TAAPH22K400S	4 in.																		
TAPH22K100S TAAPH22K100S	**100 mm**																		
TAPH24K403S TAAPH24K403S	4 3/16 in.	22224	**133.4** 5.25	**256.7** 10.11	**154.5** 6.08	**330.2** 13.00	**368.3** 14.50	**69.9** 2.75	**419.1** 16.50	**120.7** 4.75	**50.8** 2.00	**20** 3/4	**127.3** 5.01	**67.0** 2.64	**71.6** 2.82	**18.7** 0.73	**112.0** 4.41	**139.15** 5.48	**49.9** 110
TAPH24K404S TAAPH24K404S	4 1/4 in.																		
TAPH24K110S TAAPH24K110S	**110 mm**																		
TAPH26K407S TAAPH26K407S	4 7/16 in.	22226	**152.4** 6.00	**284.0** 11.18	**165.1** 6.50	**362.0** 14.25	**406.4** 16.00	**82.6** 3.25	**450.85** 17.75	**128.0** 5.04	**51.8** 2.04	**22** 7/8	**135.9** 5.35	**71.9** 2.83	**76.6** 3.01	**20.4** 0.80	**120.9** 4.76	**149.65** 5.89	**61.7** 136
TAPH26K408S TAAPH26K408S	4 1/2 in.																		
TAPH26K115S TAAPH26K115S	**115 mm**																		
TAPH28K415S TAAPH28K415S	4 15/16 in.	22228	**152.4** 6.00	**290.8** 11.45	**180.1** 7.09	**406.4** 16.00	**435.1** 17.13	**85.9** 3.38	**500.4** 19.70	**128.0** 5.04	**51.8** 2.04	**24** 1	**141.5** 5.57	**77.5** 3.05	**85.2** 3.35	**18.3** 0.72	**131.1** 5.16	**161.15** 6.34	**61.8** 136
TAPH28K500S TAAPH28K500S	5 in.																		
TAPH28K125S TAAPH28K125S	**125 mm**																		

TAAPH SAF 500-STYLE FOUR-BOLT PILLOW BLOCKS

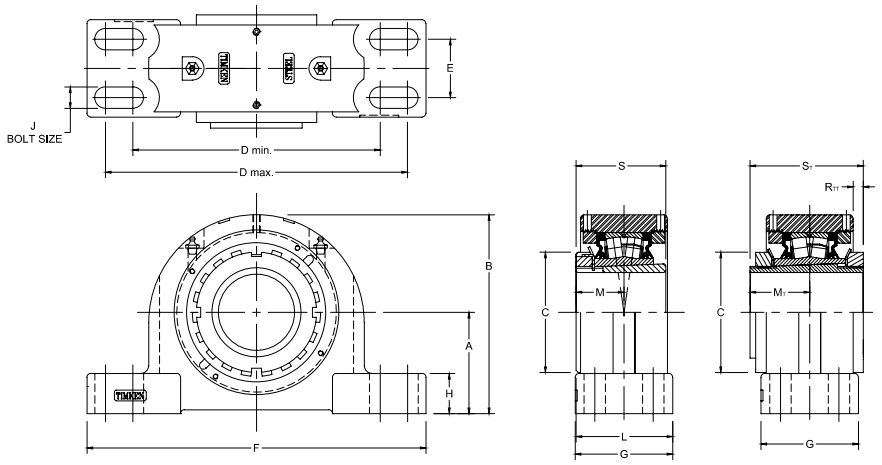

Bearing Part No.[1]	Shaft Dia.	Bearing No.	A	B	C	D min.	D max.	E	F	G	H	J	L	M_T	R_{T1}	S_T	Wt.
	mm in.		**mm** in.	**mm** in.	**mm** in.	**mm** in.	**mm** in.	**mm** in.	**mm** in.	**mm** in.	**mm** in.	**mm** in.	**mm** in.	**mm** in.	**mm** in.	**mm** in.	**kg** lbs.
TAAPH30K503SO	5 3⁄16 in.	23130	**160.3** 6.31	**320.6** 12.62	**200.0** 7.89	**431.8** 17.00	**463.6** 18.25	**95.2** 3.75	**539.8** 21.25	**171.5** 6.75	**66.2** 2.61	**M24** 1	**170** 6.69	**84** 3.32	**8** 0.32	**175** 6.89	**95.2** 210
TAAPH30K504SO	5 1⁄4 in.																
TAAPH30K135SO	**135 mm**																
TAAPH32K140SO	**140 mm**	23132	**169.9** 6.69	**330.2** 13.00	**210.0** 8.27	**441.3** 17.38	**489.0** 19.25	**95.2** 3.75	**558.8** 22.00	**171.5** 6.75	**76.2** 3.00	**M24** 1	**176** 6.94	**91** 3.56	**12** 0.47	**185** 7.28	**122.4** 270
TAAPH32K506SO	5 3⁄8 in.																
TAAPH32K507SO	5 7⁄16 in.																
TAAPH32K508SO	5 1⁄2 in.																
TAAPH34K150SO	**150 mm**	23134	**179.4** 7.06	**339.8** 13.38	**220.0** 8.66	**493.6** 19.38	**549.4** 21.63	**108.0** 4.25	**628.7** 24.75	**171.5** 6.75	**85.9** 3.38	**M24** 1	**180** 7.10	**95** 3.73	**13** 0.52	**188** 7.38	**132.9** 293
TAAPH34K513SO	5 13⁄16 in.																
TAAPH34K514SO	5 7⁄8 in.																
TAAPH34K515SO	5 15⁄16 in.																
TAAPH34K600SO	6 in.																
TAAPH36K160SO	**160 mm**	23136	**190.5** 7.50	**391.2** 15.40	**230.0** 9.06	**531.8** 20.88	**600.2** 23.63	**117.5** 4.63	**679.5** 26.75	**190.5** 7.5	**76.2** 3.00	**M24** 1	**196** 7.72	**99** 3.90	**14** 0.57	**197** 7.74	**159.2** 351
TAAPH36K605SO	6 5⁄16 in.																
TAAPH36K606SO	6 3⁄8 in.																
TAAPH36K607SO	6 7⁄16 in.																
TAAPH36K608SO	6 1⁄2 in.																
TAAPH38K170SO	**170 mm**	23138	**200.0** 7.88	**400.1** 15.75	**240.0** 9.45	**550.9** 21.63	**619.3** 24.38	**114.3** 4.50	**711.2** 28.00	**190.5** 7.50	**85.9** 3.38	**M30** 1 1⁄4	**206.7** 8.14	**105** 4.13	**13.2** 0.52	**208** 8.17	**185.9** 410
TAAPH38K613SO	6 13⁄16 in.																
TAAPH38K614SO	6 7⁄8 in.																
TAAPH38K615SO	6 15⁄16 in.																
TAAPH38K700SO	7 in.																
TAAPH40K180SO	**180 mm**	23140	**209.6** 8.25	**429.3** 16.16	**250.0** 9.84	**573.1** 22.50	**635.0** 25.00	**127.0** 5.00	**749.3** 29.50	**210.0** 8.27	**80.0** 3.15	**M30** 1 1⁄4	**215** 8.46	**110** 4.32	**16** 0.65	**218** 8.57	**207.7** 458
TAAPH40K702SO	7 1⁄8 in.																
TAAPH40K703SO	7 3⁄16 in.																
TAAPH40K704SO	7 1⁄4 in.																
TAAPH44K200SO	**200 mm**	23144	**241.3** 9.50	**455.3** 17.93	**280.0** 11.02	**630.4** 24.75	**708.2** 27.88	**133.4** 5.25	**831.9** 32.75	**225.0** 8.86	**85.1** 3.35	**M36** 1 1⁄2	**231** 9.11	**119** 4.68	**21** 0.81	**235** 9.24	**284.4** 627
TAAPH44K713SO	7 13⁄16 in.																
TAAPH44K714SO	7 7⁄8 in.																
TAAPH44K715SO	7 15⁄16 in.																
TAAPH44K800SO	8 in.																

[1] Insert size 23132K and above come standard with double nut tapered adapter

TAAPHD SDAF 500-STYLE FOUR-BOLT PILLOW BLOCKS

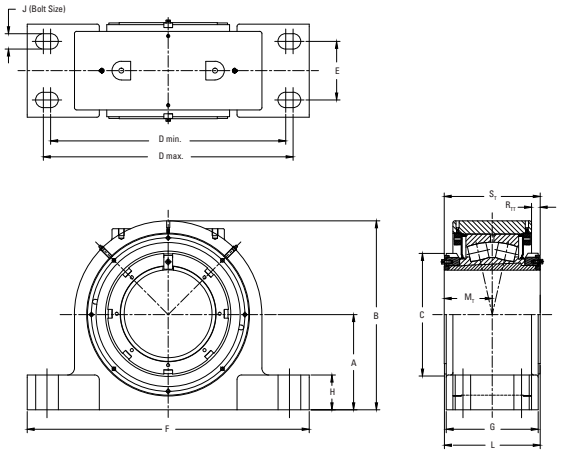

Bearing Part No.[1]	Shaft Dia.	Bearing No.	A	B	C	D min.	D max.	E	F	G	H	J	L	M_T	R_{TT}	S_T	Wt.
	mm in.		**mm** in.	**mm** in.	**mm** in.	**mm** in.	**mm** in.	**mm** in.	**mm** in.	**mm** in.	**mm** in.	**mm** in.	**mm** in.	**mm** in.	**mm** in.	**mm** in.	**kg** lbs.
TAAPH34DK150SO	**150 mm**	23134	**179.3** 7.06	**370.0** 14.60	**199.9** 7.87	**492.3** 19.38	**549.4** 21.63	**139.7** 5.50	**628.7** 24.75	**215.9** 8.50	**65.0** 2.56	**M30** 1 ¼	**203** 7.98	**95** 3.73	**13** 0.52	**188** 7.38	**132.9** 293
TAAPH34DK513SO	5 13/16 in.																
TAAPH34DK514SO	5 7/8 in.																
TAAPH34DK515SO	5 15/16 in.																
TAAPH34DK600SO	6 in.																
TAAPH36DK160SO	**160 mm**	23136	**190.5** 7.50	**391.2** 15.40	**210.1** 8.27	**530.4** 20.88	**600.2** 23.63	**149.4** 5.88	**679.5** 26.75	**219.5** 8.64	**69.9** 2.75	**M30** 1 ¼	**209** 8.22	**99** 3.90	**14** 0.57	**197** 7.74	**158.3** 349
TAAPH36DK605SO	6 5/16 in.																
TAAPH36DK606SO	6 3/8 in.																
TAAPH36DK607SO	6 7/16 in.																
TAAPH36DK608SO	6 ½ in.																
TAAPH38DK170SO	**170 mm**	23138	**200.1** 7.88	**410.8** 16.17	**219.9** 8.66	**546.1** 21.50	**596.9** 23.50	**158.8** 6.25	**701.8** 27.63	**235.0** 9.25	**74.9** 2.95	**M30** 1 3/8	**199** 7.83	**104** 4.08	**13** 0.52	**208** 8.17	**186.8** 412
TAAPH38DK613SO	6 13/16 in.																
TAAPH38DK614SO	6 7/8 in.																
TAAPH38DK615SO	6 15/16 in.																
TAAPH38DK700SO	7 in.																
TAAPH40DK180SO	**180 mm**	23140	**209.5** 8.25	**429.2** 16.90	**240.0** 9.45	**584.2** 23.00	**635.0** 25.00	**171.5** 6.75	**730.3** 28.75	**247.7** 9.75	**80.0** 3.15	**M30** 1 3/8	**234** 9.21	**110** 4.32	**16** 0.65	**218** 8.57	**220.4** 486
TAAPH40DK702SO	7 1/8 in.																
TAAPH40DK703SO	7 3/16 in.																
TAAPH40DK704SO	7 1/4 in.																
TAAPH44DK200SO	**200 mm**	23144	**241.3** 9.50	**477.1** 18.78	**279.9** 11.02	**651.0** 25.63	**708.1** 27.88	**184.2** 7.25	**812.8** 32.00	**260.4** 10.25	**85.1** 3.35	**M36** 1 ½	**249** 9.81	**119** 4.68	**21** 0.81	**235** 9.24	**278.0** 613
TAAPH44DK713SO	7 13/16 in.																
TAAPH44DK714SO	7 7/8 in.																
TAAPH44DK715SO	7 15/16 in.																
TAAPH44DK800SO	8 in.																

TAAPH6 SAF 600-STYLE FOUR-BOLT PILLOW BLOCKS

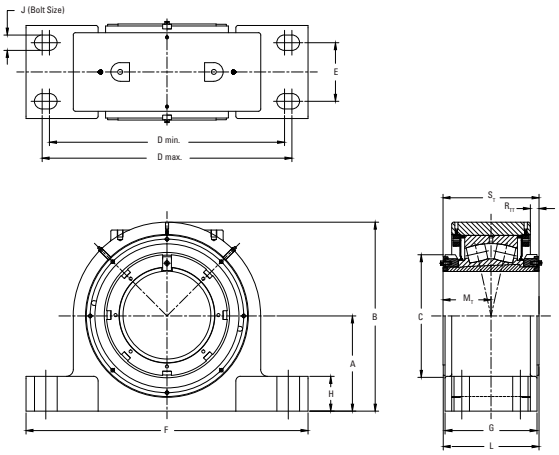

Bearing Part No.[1]	Shaft Dia.	Bearing No.	A	B	C	D min.	D max.	E	F	G	H	J	L	M_T	R_{TT}	S_T	Wt.
	mm in.		**mm** in.	**mm** in.	**mm** in.	**mm** in.	**mm** in.	**mm** in.	**mm** in.	**mm** in.	**mm** in.	**mm** in.	**mm** in.	**mm** in.	**mm** in.	**mm** in.	**kg** lbs.
TAAPH634K150SO	**150 mm**	23134	**209.6** 8.25	**400.4** 15.76	**220.0** 8.66	**571.5** 22.50	**635.0** 25.00	**127.0** 5.00	**749.3** 29.50	**203.2** 8.00	**65.0** 2.56	**M30** 1 ¼	**196** 7.73	**95** 3.73	**13** 0.53	**187.5** 7.38	**161.1** 355
TAAPH634K513SO	5 13⁄16 in.																
TAAPH634K514SO	5 7⁄8 in.																
TAAPH634K515SO	5 15⁄16 in.																
TAAPH634K600SO	6 in.																
TAAPH636K160SO	**160 mm**	23136	**225.4** 8.88	**426.7** 16.80	**230.0** 9.06	**609.6** 24.00	**676.3** 26.63	**133.4** 5.25	**793.8** 31.25	**250.8** 9.88	**69.9** 2.75	**M30** 1 ¼	**224** 8.84	**99** 3.90	**14** 0.57	**197** 7.74	**193.6** 427
TAAPH636K605SO	6 5⁄16 in.																
TAAPH636K606SO	6 3⁄8 in.																
TAAPH636K607SO	6 7⁄16 in.																
TAAPH636K608SO	6 ½ in.																
TAAPH638K170SO	**170 mm**	23138	**241.3** 9.50	**452.1** 17.80	**240.0** 9.45	**268.7** 24.75	**708.0** 27.88	**133.4** 5.25	**831.9** 32.75	**209.6** 8.25	**74.9** 2.95	**M36** 1 ½	**210** 8.26	**105** 4.13	**15** 0.60	**208** 8.17	**229.1** 505
TAAPH638K613SO	6 13⁄16 in.																
TAAPH638K614SO	6 7⁄8 in.																
TAAPH638K615SO	6 15⁄16 in.																
TAAPH638K700SO	7 in.																
TAAPH640K180SO	**180 mm**	23140	**250.8** 9.88	**472.4** 18.6	**250.0** 9.84	**666.8** 26.25	**749.3** 29.50	**139.7** 5.50	**870.0** 34.3	**215.9** 8.50	**80.0** 3.15	**M36** 1 ½	**217.9** 8.58	**110** 4.32	**16** 0.65	**218** 8.57	**272.4** 601
TAAPH640K702SO	7 1⁄8 in.																
TAAPH640K703SO	7 3⁄16 in.																
TAAPH640K704SO	7 ¼ in.																

TAAPH6D SDAF 600-STYLE FOUR-BOLT PILLOW BLOCKS

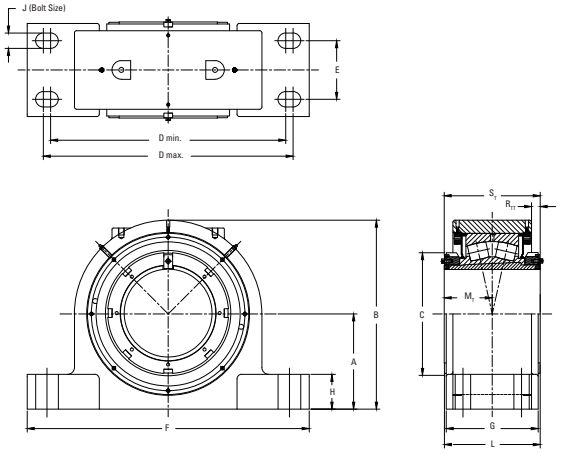

Bearing Part No.[1]	Shaft Dia.	Bearing No.	A	B	C	D min.	D max.	E	F	G	H	J	L	M_T	R_{TT}	S_T	Wt.
	mm in.		**mm** in.	**mm** in.	**mm** in.	**mm** in.	**mm** in.	**mm** in.	**mm** in.	**mm** in.	**mm** in.	**mm** in.	**mm** in.	**mm** in.	**mm** in.	**mm** in.	**kg** lbs.
TAAPH634DK150SO	**150 mm**	23134	**209.6** 8.25	**400.4** 15.76	**220.0** 8.66	**584.2** 23.00	**635.0** 25.00	**171.5** 6.75	**730.3** 28.75	**247.7** 9.75	**65.0** 2.56	**M30** 1 3/8	**219** 8.60	**95** 3.73	**13** 0.53	**187.5** 7.38	**158.4** 349
TAAPH634DK513SO	5 13/16 in.																
TAAPH634DK514SO	5 7/8 in.																
TAAPH634DK515SO	5 15/16 in.																
TAAPH634DK600SO	6 in.																
TAAPH636DK160SO	**160 mm**	23136	**225.4** 8.88	**426.7** 16.80	**230.0** 9.06	**612.8** 24.13	**669.9** 26.38	**174.6** 6.88	**774.7** 30.50	**250.8** 9.88	**69.9** 2.75	**M36** 1 ½	**224** 8.84	**99** 3.90	**14** 0.57	**197** 7.74	**189.6** 418
TAAPH636DK605SO	6 5/16 in.																
TAAPH636DK606SO	6 3/8 in.																
TAAPH636DK607SO	6 7/16 in.																
TAAPH636DK608SO	6 ½ in.																
TAAPH638DK170SO	**170 mm**	23138	**241.3** 9.50	**452.1** 17.80	**240.0** 9.45	**650.9** 25.63	**708.0** 27.88	**184.2** 7.25	**812.8** 32.00	**260.4** 10.25	**74.9** 2.95	**M36** 1 ½	**235** 9.26	**105** 4.13	**15** 0.60	**208** 8.17	**226.4** 500
TAAPH638DK613SO	6 13/16 i n.																
TAAPH638DK614SO	6 7/8 in.																
TAAPH638DK615SO	6 15/16 in.																
TAAPH638DK700SO	7 in.																
TAAPH640DK180SO	**180 mm**	23140	**250.8** 9.88	**472.4** 18.6	**250.0** 9.84	**676.3** 26.63	**743.0** 29.25	**193.7** 7.63	**850.9** 33.5	**269.9** 10.63	**80.0** 3.15	**M36** 1 5/8	**244.9** 9.64	**110** 4.32	**16** 0.65	**218** 8.57	**268.3** 592
TAAPH640DK702SO	7 1/8 in.																
TAAPH640DK703SO	7 3/16 in.																
TAAPH640DK704SO	7 1/4 in.																

TAAPH0 SAF 230-STYLE FOUR-BOLT PILLOW BLOCKS

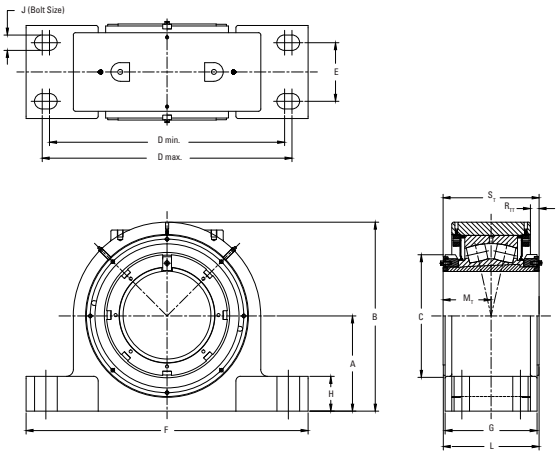

Bearing Part No.	Shaft Dia.	Bearing No.	A	B	C	D min.	D max.	E	F	G	H	J	L	M_T	R_{TT}	S_T	Wt.
	mm in.		**mm** in.	**mm** in.	**mm** in.	**mm** in.	**mm** in.	**mm** in.	**mm** in.	**mm** in.	**mm** in.	**mm** in.	**mm** in.	**mm** in.	**mm** in.	**mm** in.	**kg** lbs.
TAAPH034K150SO	**150 mm**	23134	**152.4** 6.00	**330.2** 13.00	**220** 8.66	**406.4** 16.00	**435.1** 17.13	**85.7** 3.38	**511.3** 20.13	**171.5** 6.75	**65.0** 2.56	**M24** 1	**184.8** 7.28	**99** 3.90	**9.10** 0.36	**188** 7.38	**106** 234
TAAPH034K513SO	5 13/16 in.																
TAAPH034K514SO	5 7/8 in.																
TAAPH034K515SO	5 15/16 in.																
TAAPH034K600SO	6 in.																
TAAPH036K160SO	**160 mm**	23136	**169.9** 6.69	342.9 13.5	**230** 9.06	**441.4** 17.38	**488.9** 19.25	**95.3** 3.75	**558.8** 22.00	**180.1** 7.09	**59.9** 2.36	**M24** 1	**189.1** 7.45	**99** 3.90	**14.0** 0.57	**197** 7.74	**131** 289
TAAPH036K605SO	6 5/16 in.																
TAAPH036K606SO	6 3/8 in.																
TAAPH036K607SO	6 7/16 in.																
TAAPH036K608SO	6 1/2 in.																
TAAPH038K170SO	**170 mm**	23138	**169.9** 6.69	**355.6** 14.00	**240** 9.45	**441.5** 17.38	**488.9** 19.25	**95.2** 3.75	**558.8** 22.00	**196.2** 7.72	**54.9** 2.16	**M24** 1	**203.0** 7.99	**105** 4.13	**15.3** 0.60	**208** 8.17	**145** 319
TAAPH038K613SO	6 13/16 in.																
TAAPH038K614SO	6 7/8 in.																
TAAPH038K615SO	6 15/16 in.																
TAAPH034K700SO	7 in.																
TAAPH040K180SO	**180 mm**	23140	**179.3** 7.06	**380.5** 14.98	**250** 9.84	**492.3** 19.38	**549.4** 21.63	**107.0** 4.25	**628.6** 24.75	**206.2** 8.12	**49.3** 1.94	**M24** 1	**213.1** 8.39	**110** 4.32	**16.4** 0.65	**218** 8.57	**182** 401
TAAPH040K702SO	7 1/8 in.																
TAAPH040K703SO	7 3/16 in.																
TAAPH040K704SO	7 1/4 in.																
TAAPH044K200SO	**200 mm**	23144	**200.1** 7.88	**513.1** 20.20	**280** 11.02	**549.4** 21.63	**619.2** 24.38	**114.3** 4.50	**711.2** 28.00	**289.6** 11.40	**85.1** 3.35	**M30** 1 1/4	**214.1** 8.43	**119** 4.68	**20.6** 0.81	**235** 9.24	**225** 497
TAAPH044K713SO	7 13/16 in.																
TAAPH044K714SO	7 7/8 in.																
TAAPH044K715SO	7 15/16 in.																
TAAPH044K800SO	8 in.																
TAAPH048K220SO	**220 mm**	23148	**209.5** 8.25	**459.7** 18.10	**300** 11.81	**571.5** 22.50	**635.0** 25.00	**127.0** 5.00	**749.3** 29.50	**203.2** 8.00	**89.9** 3.54	**M30** 1 1/4	**226.6** 8.92	**125** 4.93	**22.4** 0.88	**247** 9.71	**270** 595
TAAPH048K807SO	8 7/16 in.																
TAAPH048K808SO	8 1/2 in.																
TAAPH048K815SO	8 15/16 in.																
TAAPH048K900SO	9 in.																
TAAPH052K240SO	**240 mm**	23152	**241.3** 9.5	**512.1** 20.16	**330** 12.99	**628.6** 24.75	**708.1** 27.88	**133.3** 5.25	**831.8** 32.75	**236.2** 9.30	**76.2** 3.00	**M36** 1 1/2	**256.5** 10.10	**138.4** 5.45	**29.1** 1.15	**275** 10.82	**346** 764
TAAPH052K907SO	9 7/16 in.																
TAAPH052K908SO	9 1/2 in.																

TAAPH0 SDAF 230-STYLE FOUR-BOLT PILLOW BLOCKS

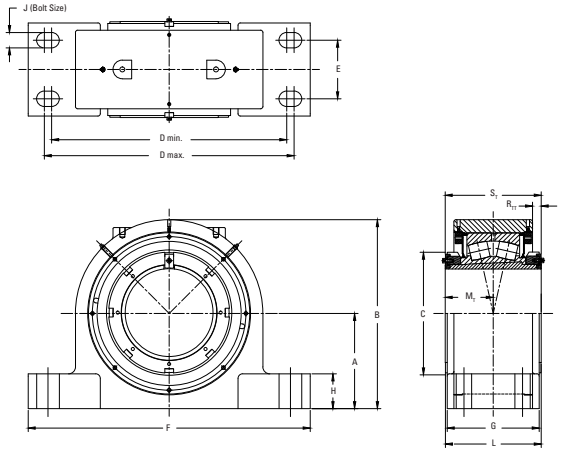

Bearing Part No.[1]	Shaft Dia.	Bearing No.	A	B	C	D min.	D max.	E	F	G	H	J	L	M_T	R_{TT}	S_T	Wt.
	mm in.		**mm** in.	**mm** in.	**mm** in.	**mm** in.	**mm** in.	**mm** in.	**mm** in.	**mm** in.	**mm** in.	**mm** in.	**mm** in.	**mm** in.	**mm** in.	**mm** in.	**kg** lbs.
TAAPH056K260SO	**260 mm**	23156	**250.9** 9.88	**522.0** 20.55	**350** 13.78	**666.7** 26.25	**749.3** 29.50	**139.7** 5.50	**869.0** 34.25	**236.2** 9.30	**71.1** 2.80	**M36** 1 ½	**256.8** 10.11	**139** 5.46	**20.2** 0.80	**275** 10.83	**421** 928
TAAPH056K915SO	9 15/16 in.																
TAAPH056K1000SO	10 in.																
TAAPH056K1007SO	10 7/16 in.																
TAAPH056K1008SO	10 ½ in.																
TAAPH060K280SO	**280 mm**	23160	**304.8** 12.00	**595.9** 23.46	**380** 14.96	**831.8** 32.75	**850.9** 33.50	**228.6** 9.00	**971.6** 38.25	**304.8** 12.00	**104.9** 4.13	**M42** 1 5/8	**297.9** 11.73	**146** 5.73	**146** 5.73	**287** 11.29	**569** 1255
TAAPH060K1015SO	10 15/16 in.																
TAAPH060K1100SO	11 in.																
TAAPH064K300SO	**300 mm**	23164	**304.8** 12.00	**616.0** 24.25	**400** 15.75	**831.9** 32.75	**850.9** 33.50	**228.6** 9.00	**971.6** 38.25	**342.9** 13.50	**89.4** 3.52	**M42** 1 5/8	**327.1** 12.88	**156** 6.13	**19.8** 0.78	**307** 12.07	**618** 1362
TAAPH064K1107SO	11 7/16 in.																
TAAPH064K1108SO	11 ½ in.																
TAAPH064K1115SO	11 15/16 in.																
TAAPH064K1200SO	12 in.																
TAAPH068K320SO	**320 mm**	23168	**304.8** 12.00	**645.6** 25.42	**440** 17.32	**812.8** 32.00	**850.9** 33.50	**254.0** 10.00	**990.6** 39.00	**349.3** 13.75	**64.3** 2.53	**M48** 1 7/8	**350.4** 13.80	**176** 6.92	**32.7** 1.29	**347** 13.65	**709** 1564
TAAPH068K1207SO	12 7/16 in.																
TAAPH068K1208SO	12 ½ in.																
TAAPH072K340SO	**340 mm**	23172	**325.3** 12.81	**670.6** 26.39	**460** 18.11	**889.0** 35.00	**927.1** 36.50	**266.7** 10.50	**1060.4** 41.75	**368.3** 14.50	**72.1** 2.84	**M48** 1 7/8	**357.5** 14.08	**180** 7.08	**35.8** 1.41	**355** 13.96	**802** 1770
TAAPH072K1215SO	12 15/16 in.																
TAAPH072K1300SO	13 in.																
TAAPH072K1307SO	13 7/16 in.																
TAAPH072K1308SO	13 ½ in.																
TAAPH076K360SO	**360 mm**	23176	**325.3** 12.81	**680.5** 26.79	**490** 19.29	**889.0** 35.00	**927.1** 36.50	**266.7** 10.50	**1060.4** 41.75	**342.9** 13.50	**115.0** 4.53	**M48** 1 7/8	**354.5** 13.96	**183** 7.21	**37.4** 1.47	**361** 14.20	**845** 1863
TAAPH076K1315SO	13 15/16 in.																
TAAPH076K1400SO	14 in.																
TAAPH080K380SO	**380 mm**	23180	**368.3** 14.50	**763.3** 30.05	**520** 20.47	**996.9** 39.25	**1035.0** 40.75	**279.4** 11.00	**1168.4** 46.00	**406.4** 16.00	**94.5** 3.72	**M50** 2	**381.7** 15.03	**188** 7.40	**39.4** 1.55	**371** 14.59	**1126** 2482
TAAPH080K1415SO	14 15/16 in.																
TAAPH080K1500SO	15 in.																

[1] Insert size 23132K and above come standard with double nut tapered adapter

TAAPH1 SDAF 231-STYLE FOUR-BOLT PILLOW BLOCKS

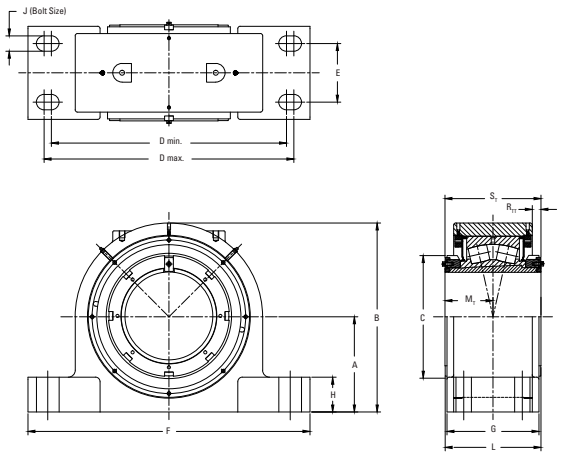

Bearing Part No.[1]	Shaft Dia.	Bearing No.	A	B	C	D min.	D max.	E	F	G	H	J	L	M_T	R_{TT}	S_T	Wt.
	mm in.		**mm** in.	**mm** in.	**mm** in.	**mm** in.	**mm** in.	**mm** in.	**mm** in.	**mm** in.	**mm** in.	**mm** in.	**mm** in.	**mm** in	**mm** in	**mm** in.	**kg** lbs.
TAAPH152K240SO	**240 mm**	23152	**260.3** 10.25	**531** 20.91	**330** 12.99	**736.6** 29.00	**774.7** 30.50	**222.2** 8.75	**889.0** 35.00	**298.5** 11.75	**95.0** 3.74	**M42** 1 ¾	**288** 11.33	**138** 5.45	**29** 1.15	**275** 10.82	**379** 836
TAAPH152K907SO	9 7⁄16 in.																
TAAPH152K908SO	9 ½ in.																
TAAPH156K260SO	**260 mm**	23156	**304.8** 12.00	**576** 22.67	**350** 13.78	**762** 30.00	**851** 33.50	**228.6** 9.00	**971.5** 38.25	**330.2** 13.00	**101.6** 4.00	**M42** 1 ¾	**304** 11.96	**139** 5.46	**20** 0.88	**275** 10.83	**512** 1130
TAAPH156K915SO	9 15⁄16 in.																
TAAPH156K1000SO	10 in.																
TAAPH156K1007SO	10 7⁄16 in.																
TAAPH156K1008SO	10 ½ in.																
TAAPH160K280SO	**280 mm**	23160	**304.8** 12.00	**596** 23.46	**380** 14.96	**831.8** 32.75	**850.9** 33.50	**228.6** 9.00	**971.6** 38.25	**305.0** 12.00	**104.9** 4.33	**M42** 1 ¾	**298** 11.73	**146** 5.73	**18** 0.71	**287** 11.29	**569** 1255
TAAPH160K1015SO	10 15⁄16 in.																
TAAPH160K1100SO	11 in.																
TAAPH164K300SO	**300 mm**	23164	**325.4** 12.81	**636** 25.06	**400** 15.75	**889.0** 35.00	**927.1** 36.50	**266.7** 10.50	**1060.5** 41.75	**342.9** 13.50	**109.9** 4.33	**M42** 1 ¾	**327** 12.88	**156** 6.13	**20** 0.78	**307** 12.07	**676** 1490
TAAPH164K1107SO	11 7⁄16 in.																
TAAPH164K1108SO	11 ½ in.																
TAAPH164K1115SO	11 15⁄16 in.																
TAAPH164K1200SO	12 in.																
TAAPH168K320SO	**320 mm**	23168	**355.6** 14.00	**696** 27.42	**440** 17.32	**933.5** 36.75	**971.6** 38.25	**273.1** 10.75	**1111.3** 43.75	**349** 13.75	**115.0** 4.53	**M50** 2	**350** 13.80	**176** 6.92	**33** 1.29	**347** 13.65	**841** 1855
TAAPH168K1207SO	12 7⁄16 in.																
TAAPH168K1208SO	12 ½ in.																
TAAPH172K340SO	**340 mm**	23172	**368.3** 14.50	**713** 28.08	**460** 18.11	**996.9** 39.25	**1035.0** 40.75	**279.4** 11.00	**1168.4** 46.00	**368.3** 14.5	**115.0** 4.53	**M50** 2	**358** 14.08	**180** 7.08	**36** 1.41	**355** 13.96	**920** 2029
TAAPH172K1215SO	12 15⁄16 in.																
TAAPH172K1300SO	13 in.																
TAAPH172K1307SO	13 7⁄16 in.																
TAAPH172K1308SO	13 ½ in.																
TAAPH176K360SO	**360 mm**	23176	**368.3** 14.50	**729** 28.71	**490** 19.29	**996.9** 39.25	**1035.0** 40.75	**279.4** 11.00	**1168.4** 46.00	**368.3** 14.5	**115.0** 4.53	**M50** 2	**361** 14.2	**183** 7.21	**37** 1.5	**361** 14.20	**965** 2128
TAAPH176K1315SO	13 15⁄16 in.																
TAAPH176K1400SO	14 in.																
TAAPH180K380SO	**380 mm**	23180	**393.7** 15.50	**789** 31.0	**520** 20.47	**1060.4** 41.75	**1104.9** 43.50	**311.1** 12.25	**1238.2** 48.75	**406.4** 16.00	**119.9** 4.72	**M60** 2 1⁄4	**382** 15.0	**188** 7.40	**39** 1.6	**371** 14.59	**1205** 2657
TAAPH180K1415SO	14 15⁄16 in.																
TAAPH180K1500SO	15 in.																

[1] Insert size 23132K and above come standard with double nut tapered adapter

TAAPG SN-STYLE FOUR-BOLT PILLOW BLOCKS

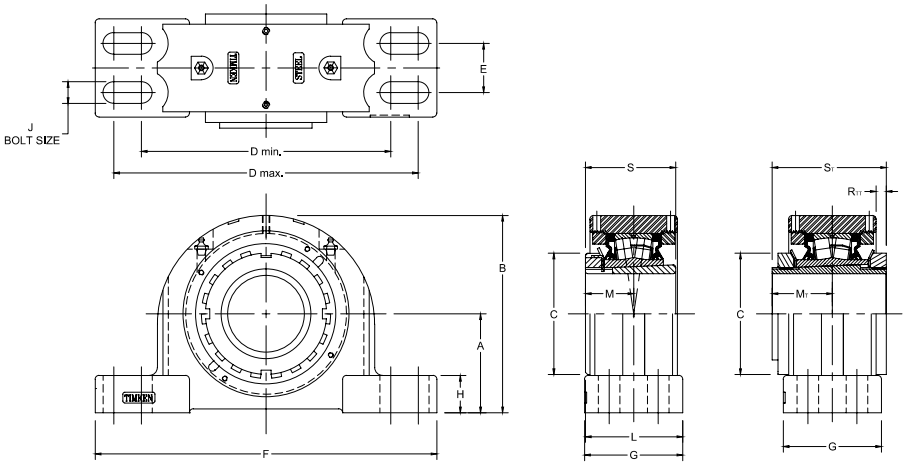

Bearing Part No.	Shaft Dia.	Bearing No.	A	B	C	D min.	D max.	E	F	G	H	J	L	M	M_T	R_{TT}	S	S_T	Wt.
	mm in.		**mm** in.	**mm** in.	**mm** in.	**mm** in.	**mm** in.	**mm** in.	**mm** in.	**mm** in.	**mm** in.	**mm** in.	**mm** in.	**mm** in.	**mm** in.	**mm** in.	**mm** in.	**mm** in.	**kg** lbs.
TAPG11K115S TAAPG11K115S	1 15/16 in.	22211	**69.9** 2.75	**134.9** 5.31	**74.9** 2.95	**182.4** 7.18	**217.4** 8.56	**39.9** 1.57	**251.0** 9.88	**68.6** 2.70	**31.8** 1.25	**16** 5/8	**69.9** 2.75	**35.6** 1.40	**39.1** 1.54	**7.1** 0.28	**58.9** 2.32	**76.33** 3.01	**8.6** 19
TAPG11K200S TAAPG11K200S	2 in.																		
TAPG11K050S TAAPG11K050S	**50 mm**																		
TAPG12K055S TAAPG12K055S	**55 mm**	22212	**70.0** 2.756	**140.5** 5.53	**79.8** 3.14	**177.8** 7.00	**219.2** 8.63	**35.1** 1.38	**254.0** 10.00	**69.9** 2.75	**31.8** 1.25	**16** 5/8	**72.6** 2.86	**37.6** 1.48	**41.1** 1.62	**7.0** 0.28	**62.0** 2.44	**78.33** 3.08	**9.9** 22
TAPG13K203S TAAPG13K203S	2 3/16 in.	22213	**80.0** 3.15	**154.9** 6.10	**85.1** 3.35	**182.4** 7.18	**217.4** 8.56	**48.0** 1.89	**261.9** 10.31	**82.6** 3.25	**35.1** 1.38	**16** 5/8	**81.0** 3.19	**39.6** 1.56	**43.7** 1.72	**5.1** 0.20	**65.0** 2.56	**82.83** 3.26	**11.3** 25
TAPG13K204S TAAPG13K204S	2 1/4 in.																		
TAPG13K060S TAAPG13K060S	**60 mm**																		
TAPG15K207S TAAPG15K207S	2 7/16 in.	22215	**80.0** 3.15	**162.1** 6.38	**98.0** 3.86	**201.7** 7.94	**246.1** 9.69	**39.6** 1.56	**276.4** 10.88	**79.5** 3.13	**30.2** 1.19	**16** 5/8	**83.8** 3.30	**43.9** 1.73	**48.7** 1.92	**8.3** 0.33	**72.9** 2.87	**92.33** 3.64	**13.2** 29
TAPG15K208S TAAPG15K208S	2 1/2 in.																		
TAPG15K065S TAAPG15K065S	**65 mm**																		
TAPG16K211S TAAPG16K211S	2 11/16 in.	22216	**95.0** 3.74	**180.3** 7.10	**104.6** 4.12	**235.0** 9.25	**266.7** 10.50	**50.0** 1.97	**315.0** 12.40	**89.9** 3.54	**31.8** 1.25	**16** 5/8	**92.5** 3.64	**47.5** 1.87	**51.7** 2.04	**11.3** 0.45	**78.0** 3.07	**99.33** 3.91	**14.9** 33
TAPG16K212S TAAPG16K212S	2 3/4 in.																		
TAPG16K070S TAAPG16K070S	**70 mm**																		
TAPG17K215S TAAPG17K215S	2 15/16 in.	22217	**95.0** 3.74	**182.9** 7.20	**110.0** 4.33	**239.8** 9.44	**287.3** 11.31	**52.3** 2.06	**320.8** 12.63	**92.2** 3.63	**31.8** 1.25	**20** 3/4	**96.0** 3.78	**49.8** 1.96	**50.2** 1.98	**16.0** 0.63	**82.0** 3.23	**104.33** 4.12	**16.8** 37
TAPG17K300S TAAPG17K300S	3 in.																		
TAPG17K075S TAAPG17K075S	**75 mm**																		
TAPG18K080S TAAPG18K080S	**80 mm**	22218	**100.0** 3.937	**195.3** 7.69	**119.6** 4.71	**282.7** 11.13	**298.5** 11.75	**50.0** 1.97	**344.9** 13.58	**100.1** 3.94	**39.6** 1.56	**16** 5/8	**102.1** 4.02	**52.1** 2.05	**56.6** 2.23	**12.3** 0.49	**86.1** 3.39	**108.83** 4.28	**24.5** 54
TAPG18K303S TAAPG18K303S	3 3/16 in.																		
TAPG18K304S TAAPG18K304S	3 1/4 in.																		
TAPG19K085S TAAPG19K085S	**85 mm**	22219	**112.0** 4.409	**212.3** 8.36	**124.7** 4.91	**282.7** 11.13	**298.5** 11.75	**50.0** 1.97	**344.9** 13.58	**100.1** 3.94	**39.6** 1.56	**16** 5/8	**104.6** 4.12	**54.6** 2.15	**59.2** 2.33	**13.2** 0.52	**89.9** 3.54	**113.83** 4.48	**25.4** 56

Continued on next page.

TAAPG SN-STYLE FOUR-BOLT PILLOW BLOCKS – *continued*

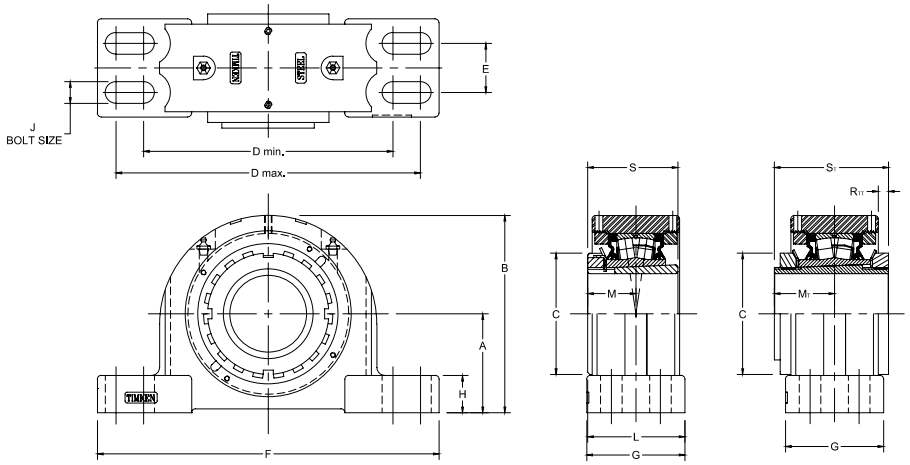

Continued from previous page.

Bearing Part No.	Shaft Dia.	Bearing No.	A	B	C	D min.	D max.	E	F	G	H	J	L	M	M_T	R_{TT}	S	S_T	Wt.
	mm in.		**mm** in.	**mm** in.	**mm** in.	**mm** in.	**mm** in.	**mm** in.	**mm** in.	**mm** in.	**mm** in.	**mm** in.	**mm** in.	**mm** in.	**mm** in.	**mm** in.	**mm** in.	**mm** in.	**kg** lbs.
TAPG20K307S TAAPG20K307S	3 7⁄16 in.	22220	**112.0** 4.409	**214.6** 8.45	**130.0** 5.12	**276.4** 10.88	**339.9** 13.38	**60.5** 2.38	**381.0** 15.00	**109.5** 4.31	**39.6** 1.56	**20** 3⁄4	**113.3** 4.46	**58.4** 2.30	**63.6** 2.51	**10.6** 0.42	**97.0** 3.82	**121.83** 4.80	**31.8** 70
TAPG20K308S TAAPG20K308S	3 ½ in.																		
TAPG20K090S TAAPG20K090S	**90 mm**																		
TAPG22K315S TAAPG22K315S	3 15⁄16 in.	22222	**125.0** 4.921	**238.3** 9.38	**145.0** 5.71	**301.8** 11.88	**368.3** 14.50	**69.9** 2.75	**406.4** 16.00	**120.7** 4.75	**44.5** 1.75	**20** 3⁄4	**123.4** 4.86	**63.0** 2.48	**65.8** 2.59	**14.1** 0.56	**104.9** 4.13	**130.7** 5.15	**39.5** 87
TAPG22K400S TAAPG22K400S	4 in.																		
TAPG22K100S TAAPG22K100S	**100 mm**																		
TAPG24K403S TAAPG24K403S	4 3⁄16 in.	22224	**140.0** 5.512	**262.9** 10.35	**154.4** 6.08	**330.2** 13.00	**355.6** 14.00	**70.1** 2.76	**410.0** 16.14	**120.7** 4.75	**50.8** 2.00	**16** 5⁄8	**127.5** 5.02	**67.1** 2.64	**71.6** 2.82	**16.8** 0.66	**112.0** 4.41	**139.15** 5.48	**49.9** 110
TAPG24K404S TAAPG24K404S	4 ¼ in.																		
TAPG24K110S TAAPG24K110S	**110 mm**																		
TAPG26K407S TAAPG26K407S	4 7⁄16 in.	22226	**150.0** 5.906	**281.7** 11.09	**165.1** 6.50	**367.28** 14.46	**400.1** 15.75	**81.0** 3.19	**444.5** 17.50	**128.0** 5.04	**49.3** 1.94	**24** 1	**135.9** 5.35	**71.88** 2.83	**76.6** 3.01	**20.4** 0.80	**120.9** 4.76	**149.65** 5.89	**61.7** 136
TAPG26K408S TAAPG26K408S	4 ½ in.																		
TAPG26K115S TAAPG26K115S	**115 mm**																		
TAPG28K415S TAAPG28K415S	4 15⁄16 in.	22228	**150.0** 5.906	**288.4** 11.36	**180.1** 7.09	**384.3** 15.13	**447.8** 17.63	**80.0** 3.15	**500.4** 19.70	**128.0** 5.04	**49.3** 1.94	**24** 1	**141.5** 5.57	**77.5** 3.05	**85.2** 3.35	**18.3** 0.72	**131.1** 5.16	**161.15** 6.34	**61.8** 136
TAPG28K500S TAAPG28K500S	5 in.																		
TAPG28K125S TAAPG28K125S	**125 mm**																		
TAAPG30K503S	5 3⁄16 in.	23130	**160.0** 6.30	**320.7** 12.62	**200.5** 7.89	**444.0** 17.48	**456.0** 17.95	**90.0** 3.54	**530.0** 20.87	160.0 6.30	**60.0** 2.36	**24** 1	**164.2** 6.46	N/A	**84.2** 3.32	**10.8** 0.43	N/A	**175.0** 6.89	**84** 185
TAAPG30K504S	5 ¼ in.																		
TAAPG30K135S	**135 mm**																		
TAAPG32K140SO	**140 mm**	23132	**170.0** 6.69	**330.4** 13.01	**210.0** 8.27	**450.0** 17.72	**477.0** 18.78	**90.0** 3.54	**550.0** 21.65	**171.5** 6.75	**76.3** 3.01	**M24** 1	**176.6** 6.95	N/A	**90.5** 3.56	**11.6** 0.46	**185.0** 7.28	N/A	**113** 250
TAAPG32K506SO	5 3⁄8 in.																		
TAAPG32K507SO	5 7⁄16 in.																		
TAAPG32K508SO	5 ½ in.																		

TAASN 3000 SERIES FOUR-BOLT PILLOW BLOCK

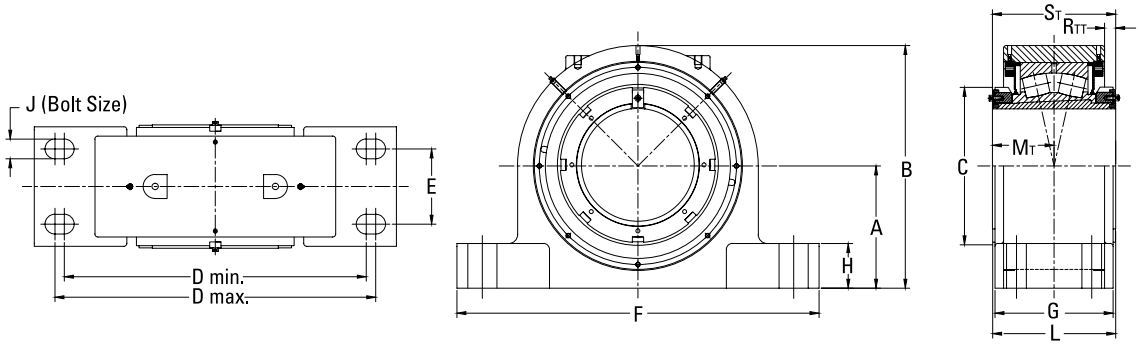

Bearing Part No.[1]	Shaft Dia.	Bearing No.	A	B	C	D min.	D max.	E	F	G	H	J	L	MT	N	RTT	ST	Wt.
	mm in.		**mm** in.	**mm** in.	**mm** in.	**mm** in.	**mm** in.	**mm** in.	**mm** in.	**mm** in.	**mm** in.	**mm** in.	**mm** in.	**mm** in.	**mm** in.	**mm** in.	**mm** in.	**kg** lbs.
TAA30SN36K160SO	**160 mm**	23136	**170** 6.69	**343** 13.50	**210** 8.27	**410** 16.14	**450** 17.72	**100** 3.94	**510** 20.08	**180** 7.09	**60** 2.36	**24** 1	**189** 7.44	**99** 3.90	**48** 1.89	**14** 0.56	**197** 7.74	**112** 248
TAA30SN36K605SO	6 5⁄16 in.																	
TAA30SN36K606SO	6 3⁄8 in.																	
TAA30SN36K607SO	6 7⁄16 in.																	
TAA30SN36K608SO	6 1⁄2 in.																	
TAA30SN38K170SO	**170 mm**	23138	**180** 7.09	**365** 14.37	**220** 8.66	**430** 16.93	**470** 18.50	**110** 4.33	**530** 20.87	**196** 7.72	**65** 2.56	**24** 1	**203** 8.21	**105** 4.13	**48** 1.89	**15** 0.60	**208** 8.17	**131** 289
TAA30SN38K613SO	6 13⁄16 in.																	
TAA30SN38K614SO	6 7⁄8 in.																	
TAA30SN38K615SO	6 15⁄16 in.																	
TAA30SN38K700SO	7 in.																	
TAA30SN40K180SO	**180 mm**	23140	**190** 7.48	**391** 15.39	**240** 9.45	**460** 18.11	**500** 19.69	**120** 4.72	**560** 22.05	**206** 8.13	**60** 2.36	**24** 1	**213** 8.38	**110** 4.32	**48** 1.89	**17** 0.66	**218** 8.57	**153** 339
TAA30SN40K702SO	7 1⁄8 in.																	
TAA30SN40K703SO	7 3⁄16 in.																	
TAA30SN40K704SO	7 1⁄4 in.																	
TAA30SN44K200SO	**200 mm**	23144	**210** 8.27	**446** 17.56	**280** 11.02	**490** 19.29	**530** 20.87	**130** 5.12	**610** 24.02	**216** 8.51	**75** 2.96	**30** 1 1⁄4	**277** 8.94	**119** 4.68	**55** 2.17	**21** 0.87	**235** 9.24	**199** 439
TAA30SN44K713SO	7 13⁄16 in.																	
TAA30SN44K714SO	7 7⁄8 in.																	
TAA30SN44K715SO	7 15⁄16 in.																	
TAA30SN44K800SO	8 in.																	
TAA30SN48K220SO	**220 mm**	23148	**220** 8.27	**454** 17.87	**300** 11.81	**520** 20.47	**560** 22.05	**140** 5.51	**640** 25.20	**240** 9.45	**90** 3.54	**30** 1 1⁄4	**238** 9.38	**125** 4.93	**55** 2.17	**22** 0.87	**247** 9.71	**230** 506
TAA30SN48K807SO	8 7⁄16 in.																	
TAA30SN48K808SO	8 1⁄2 in.																	
TAA30SN48K815SO	8 15⁄16 in.																	
TAA30SN48K900SO	9 in.																	
TAA30SN52K240SO	**240 mm**	23152	**240** 9.45	**496** 19.53	**330** 12.99	**580** 22.83	**620** 24.41	**150** 5.91	**700** 27.56	**254** 10	**75** 2.96	**30** 1 1⁄4	**257** 10.10	**91** 5.45	**55** 2.17	**18** 0.72	**275** 10.82	**289** 637
TAA30SN52K907SO	9 7⁄16 in.																	
TAA30SN52K908SO	9 1⁄2 in.																	

[1]SN 3000 Series comes standard with double nut tapered adapter

Continued on next page.

TAASN 3000 SERIES FOUR-BOLT PILLOW BLOCK – *continued*

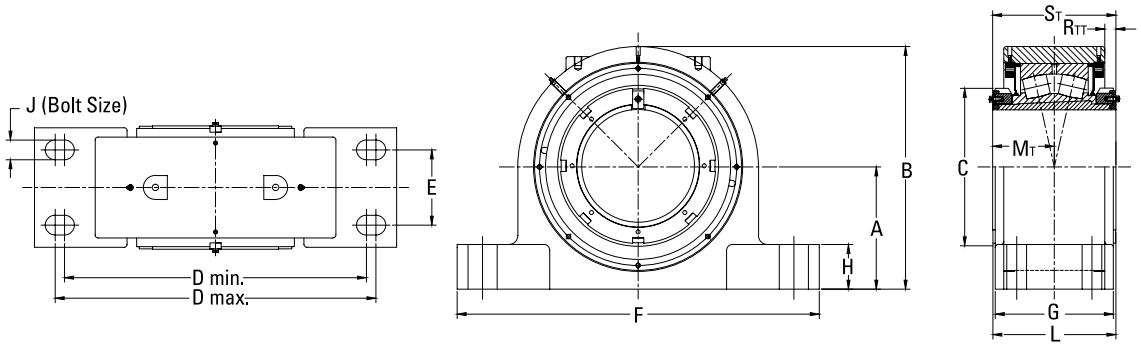

Continued from previous page.

Bearing Part No.[1]	Shaft Dia.	Bearing No.	A	B	C	D min.	D max.	E	F	G	H	J	L	M_T	N	R_{TT}	S_T	Wt.
	mm in.		**mm** in.	**mm** in.	**mm** in.	**mm** in.	**mm** in.	**mm** in.	**mm** in.	**mm** in.	**mm** in.	**mm** in.	**mm** in.	**mm** in.	**mm** in.	**mm** in.	**mm** in.	**kg** lbs.
TAA30SN56K260SO	**260 mm**	23156	**260** 10.24	**531** 20.91	**350** 13.78	**642** 25.28	**682** 26.85	**160** 6.30	**770** 30.31	**236** 9.30	**82** 3.22	**36** 1 ½	**257** 10.11	**139** 5.46	**62** 2.44	**20** 0.80	**275** 10.83	**358** 790
TAA30SN56K915SO	9 15/16 in.																	
TAA30SN56K1000SO	10 in.																	
TAA30SN56K1007SO	10 7/16 in.																	
TAA30SN56K1008SO	10 ½ in.																	
TAA30SN60K280SO	**280 mm**	23160	**280** 11.02	**571** 22.48	**380** 14.96	**650** 25.59	**690** 27.17	**160** 6.30	**790** 31.10	**266** 10.48	**105** 4.13	**36** 1 ½	**279** 10.97	**146** 5.73	**62** 2.44	**18** 0.71	**287** 11.29	**442** 975
TAA30SN60K1015SO	10 15/16 in.																	
TAA30SN60K1100SO	11 in.																	
TAA30SN64K300SO	**300 mm**	23164	**300** 11.81	**611** 24.06	**400** 15.75	**690** 27.17	**730** 28.74	**190** 7.48	**830** 32.68	**276** 10.87	**90** 3.54	**36** 1 ½	**294** 11.57	**156** 6.13	**62** 2.44	**20** 0.78	**307** 12.07	**524** 1156
TAA30SN64K1107SO	11 7/16 in.																	
TAA30SN64K1108SO	11 ½ in.																	
TAA30SN64K1115SO	11 15/16 in.																	
TAA30SN64K1200SO	12 in.																	
TAA30SN68K320SO	**320 mm**	23168	**320** 12.60	**655** 25.79	**440** 17.32	**730** 28.74	**770** 30.31	**200** 7.87	**880** 34.65	**296** 11.66	**115** 4.53	**36** 1 ½	**324** 12.75	**176** 6.92	**62** 2.44	**33** 1.29	**347** 13.65	**634** 1398
TAA30SN68K1207SO	12 7/16 in.																	
TAA30SN68K1208SO	12 ½ in.																	
TAA30SN72K340SO	**340 mm**	23172	**320** 12.60	**665** 26.18	**460** 18.11	**730** 28.74	**770** 30.31	**200** 7.87	**950** 37.40	**296** 11.66	**115** 4.53	**36** 1 ½	**328** 12.91	**180** 7.08	**62** 2.44	**36** 1.40	**355** 13.96	**760** 1676
TAA30SN72K1215SO	12 15/16 in.																	
TAA30SN72K1300SO	13 in.																	
TAA30SN72K1307SO	13 7/16 in.																	
TAA30SN72K1308SO	13 ½ in.																	
TAA30SN76K360SO	**360 mm**	23176	**340** 13.39	**695** 27.36	**490** 19.29	**790** 31.10	**830** 32.68	**220** 8.66	**1000** 39.37	**296** 11.66	**95** 3.74	**36** 1 ½	**331** 13.04	**183** 7.21	**62** 2.44	**37** 1.47	**361** 14.20	**838** 1848
TAA30SN76K1315SO	13 15/16 in.																	
TAA30SN76K1400SO	14 in.																	
TAA30SN80K380SO	**380 mm**	23180	**350** 13.78	**745** 29.33	**520** 20.47	**820** 32.28	**860** 33.86	**220** 8.66	**1040** 40.94	**316** 12.45	**90** 3.54	**36** 1 ½	**346** 13.63	**188** 7.40	**62** 2.44	**39** 1.55	**371** 14.59	**921** 2031
TAA30SN80K1415SO	14 15/16 in.																	
TAA30SN80K1500SO	15 in.																	

[1] SN 3000 Series comes standard with double nut tapered adapter

TAASN 3100 SERIES FOUR-BOLT PILLOW BLOCK

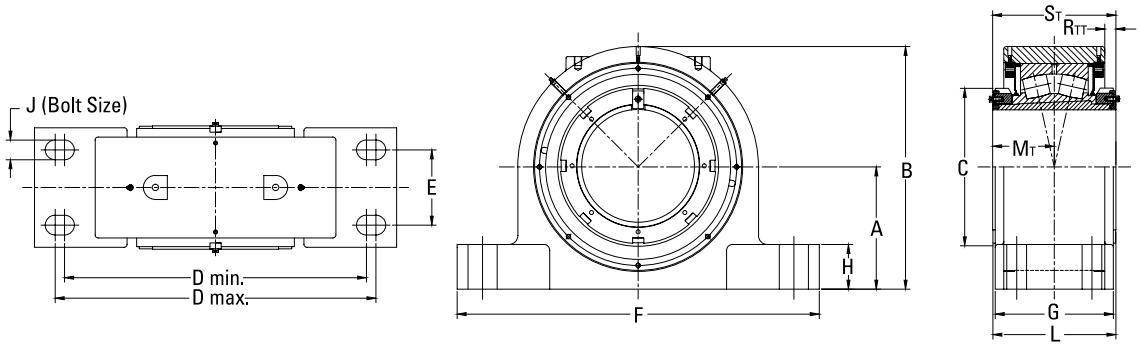

Bearing Part No.[1]	Shaft Dia.	Bearing No.	A	B	C	D min.	D max.	E	F	G	H	J (Bolt Size)	L	MT	N	RTT	ST	Wt.
	mm in.		**mm** in.	**mm** in.	**mm** in.	**mm** in.	**mm** in.	**mm** in.	**mm** in.	**mm** in.	**mm** in.	**mm** in.	**mm** in.	**mm** in.	**mm** in.	**mm** in.	**mm** in.	**kg** lbs.
TAA31SN34K150SO	**150 mm**	23134	**170** 6.69	**333** 13.11	**220** 8.66	**410** 16.14	**450** 17.72	**100** 3.94	**510** 20.08	**171.5** 6.75	**65** 2.56	**24** 1	**180** 7.08	**95** 3.73	**48** 1.89	**14** 0.53	**188** 7.38	**104** 230
TAA31SN34K513SO	5 13⁄16 in.																	
TAA31SN34K514SO	5 7⁄8 in.																	
TAA31SN34K515SO	5 15⁄16 in.																	
TAA31SN34K600SO	6 in.																	
TAA31SN36K160SO	**160 mm**	23136	**180** 7.09	**353** 13.90	**230** 9.06	**430** 16.93	**470** 18.50	**110** 4.33	**530** 20.87	**180** 7.09	**70** 2.76	**24** 1	**189** 7.45	**99** 3.90	**48** 1.89	**14** 0.57	**197** 7.74	**122** 268
TAA31SN36K605SO	6 5⁄16 in.																	
TAA31SN36K606SO	6 3⁄8 in.																	
TAA31SN36K607SO	6 7⁄16 in.																	
TAA31SN36K608SO	6 1⁄2 in.																	
TAA31SN38K170SO	**170 mm**	23138	**190** 7.48	**375** 14.76	**240** 9.45	**460** 18.11	**500** 19.69	**120** 4.72	**560** 22.05	**196.2** 7.72	**75** 2.95	**24** 1	**200** 7.87	**105** 4.13	**48** 1.89	**16** 0.61	**208** 8.17	**144** 317
TAA31SN38K613SO	6 13⁄16 in.																	
TAA31SN38K614SO	6 7⁄8 in.																	
TAA31SN38K615SO	6 15⁄16 in.																	
TAA31SN38K700SO	7 in.																	
TAA31SN40K180SO	**180 mm**	23140	**210** 8.27	**411** 16.18	**250** 9.84	**490** 19.29	**530** 20.87	**130** 5.12	**610** 24.02	**206** 8.12	**80** 3.15	**30** 1-1⁄4	**215** 8.46	**110** 4.32	**55** 2.17	**16** 0.64	**218** 8.57	**182** 401
TAA31SN40K702SO	7 1⁄8 in.																	
TAA31SN40K703SO	7 3⁄16 in.																	
TAA31SN40K704SO	7 1⁄4 in.																	
TAA31SN44K200SO	**200 mm**	23144	**220** 8.27	**456** 17.95	**280** 11.02	**520** 20.47	**560** 22.05	**140** 5.51	**640** 25.20	**216.2** 8.51	**85** 3.35	**30** 1-1⁄4	**231** 9.11	**119** 4.68	**55** 2.17	**21** 0.81	**235** 9.24	**212** 468
TAA31SN44K713SO	7 13⁄16 in.																	
TAA31SN44K714SO	7 7⁄8 in.																	
TAA31SN44K715SO	7 15⁄16 in.																	
TAA31SN44K800SO	8 in.																	
TAA31SN48K220SO	**220 mm**	23148	**240** 9.45	**474** 18.66	**300** 11.81	**580** 22.83	**620** 24.41	**150** 5.91	**700** 27.56	**240** 9.45	**90** 3.54	**30** 1-1⁄4	**245** 9.66	**125** 4.93	**55** 2.17	**22** 0.88	**247** 9.71	**265** 584
TAA31SN48K807SO	8 7⁄16 in.																	
TAA31SN48K808SO	8 1⁄2 in.																	
TAA31SN48K815SO	8 15⁄16 in.																	
TAA31SN48K900SO	9 in.																	

[1] SN 3100 Series comes standard with double nut tapered adapter

Continued on next page.

TAASN 3100 SERIES FOUR-BOLT PILLOW BLOCK – *continued*

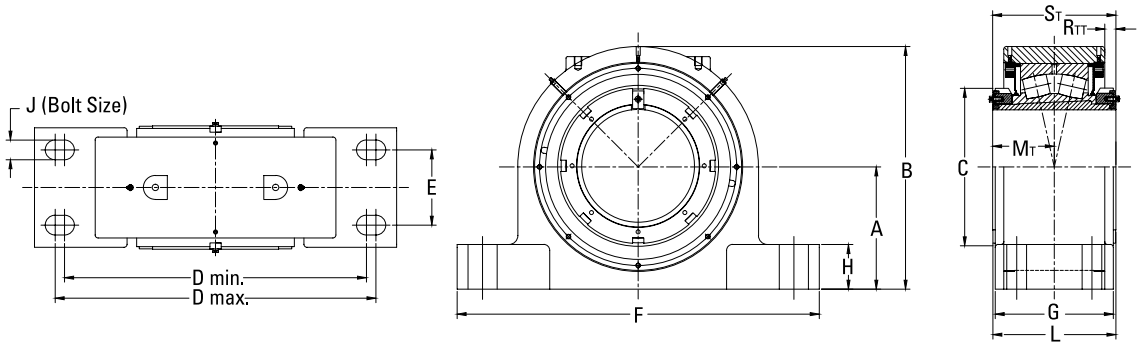

Continued from previous page.

Bearing Part No.[1]	Shaft Dia.	Bearing No.	A	B	C	D min.	D max.	E	F	G	H	J (Bolt Size)	L	M_T	N	R_{TT}	S_T	Wt.
	mm in.		**mm** in.	**mm** in.	**mm** in.	**mm** in.	**mm** in.	**mm** in.	**mm** in.	**mm** in.	**mm** in.	**mm** in.	**mm** in.	**mm** in.	**mm** in.	**mm** in.	**mm** in.	**kg** lbs.
TAA31SN52K240SO	**240 mm**	23152	**260** 10.24	**530.6** 20.89	**330** 12.99	**642** 25.28	**682** 26.85	**160** 6.30	**770** 30.31	**236** 9.30	**95** 3.74	**36** 1 ½	**265** 10.45	**91** 5.45	**62** 2.44	**29** 1.15	**275** 10.82	**327** 721
TAA31SN52K907SO	9 7⁄16 in.																	
TAA31SN52K908SO	9 ½ in.																	
TAA31SN56K260SO	**260 mm**	23156	**280** 11.02	**551** 21.69	**350** 13.78	**650** 25.59	**690** 27.17	**160** 6.30	**790** 31.10	**236** 9.30	**100** 3.94	**36** 1 ½	**266** 10.46	**139** 5.46	**62** 2.44	**20** 0.80	**275** 10.83	**403** 888
TAA31SN56K915SO	9 15⁄16 in.																	
TAA31SN56K1000SO	10 in.																	
TAA31SN56K1007SO	10 7⁄16 in.																	
TAA31SN56K1008SO	10 ½ in.																	
TAA31SN60K280SO	**280 mm**	23160	**300** 11.81	**591** 23.27	**380** 14.96	**690** 27.17	**730** 28.74	**190** 7.48	**830** 32.68	**266** 10.48	**125** 4.92	**36** 1 ½	**296** 11.63	**146** 5.73	**62** 2.44	**18** 0.71	**287** 11.29	**487** 1074
TAA31SN60K1015SO	10 15⁄16 in.																	
TAA31SN60K1100SO	11 in.																	
TAA31SN64K300SO	**300 mm**	23164	**320** 12.60	**631** 24.84	**400** 15.75	**730** 28.74	**770** 30.31	**200** 7.87	**880** 34.65	**276** 10.82	**110** 4.33	**36** 1 ½	**311** 12.23	**156** 6.13	**62** 2.44	**20** 0.78	**307** 12.07	**573** 1263
TAA31SN64K1107SO	11 7⁄16 in.																	
TAA31SN64K1108SO	11 ½ in.																	
TAA31SN64K1115SO	11 15⁄16 in.																	
TAA31SN64K1200SO	12 in.																	
TAA31SN68K320SO	**320 mm**	23168	**340** 13.39	**675** 26.57	**440** 17.32	**790** 31.10	**830** 32.68	**220** 8.66	**950** 37.40	**296** 11.66	**115** 4.53	**36** 1 ½	**346** 13.62	**176** 6.92	**62** 2.44	**33** 1.29	**347** 13.65	**713** 1572
TAA31SN68K1207SO	12 7⁄16 in.																	
TAA31SN68K1208SO	12 ½ in.																	
TAA31SN72K340SO	**340 mm**	23172	**350** 13.78	**695** 27.36	**460** 18.11	**820** 32.28	**860** 33.86	**220** 8.66	**1000** 39.37	**296** 11.66	**115** 4.53	**36** 1 ½	**350** 13.77	**180** 7.08	**62** 2.44	**36** 1.41	**355** 13.96	**787** 1736
TAA31SN72K1215SO	12 15⁄16 in.																	
TAA31SN72K1300SO	13 in.																	
TAA31SN72K1307SO	13 7⁄16 in.																	
TAA31SN72K1308SO	13 ½ in.																	
TAA31SN76K360SO	**360 mm**	23176	**360** 14.17	**715** 28.15	**490** 19.29	**850** 33.46	**890** 35.04	**220** 8.66	**1040** 40.94	**296** 11.66	**115** 4.53	**36** 1 ½	**353** 13.90	**183** 7.21	**62** 2.44	**37** 1.47	**361** 14.20	**862** 1901
TAA31SN76K1315SO	13 15⁄16 in.																	
TAA31SN76K1400SO	14 in.																	
TAA31SN80K380SO	**380 mm**	23180	**380** 14.96	**775** 30.51	**520** 20.47	**930** 36.61	**970** 38.19	**240** 9.45	**1120** 44.09	**316** 12.45	**120** 4.72	**42** 1 ⅝	**373** 14.69	**188** 7.40	**68** 2.68	**39** 1.55	**371** 14.59	**1088** 2398
TAA31SN80K1415SO	14 15⁄16 in.																	
TAA31SN80K1500SO	15 in.																	

[1] SN 3100 Series comes standard with double nut tapered adapter

DVC AND DAAC PILOTED FLANGE CARTRIDGES

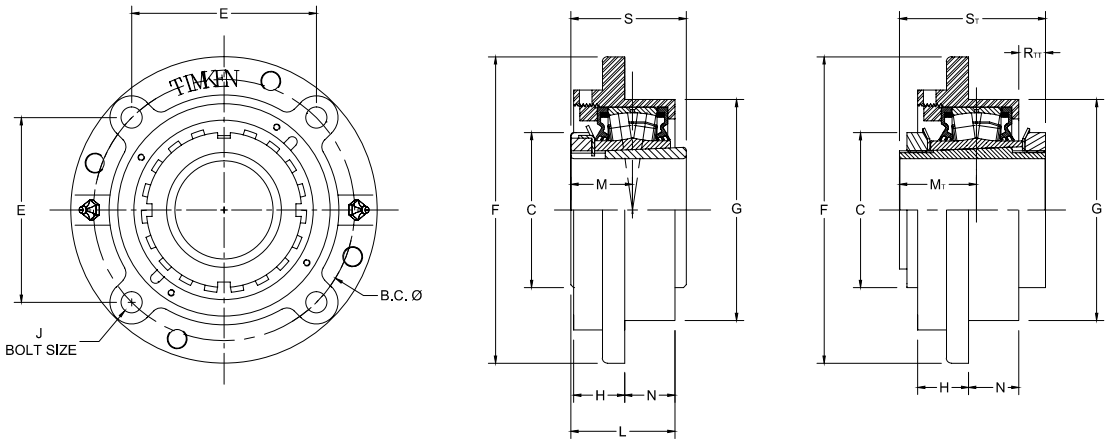

Bearing Part No.	Shaft Dia.	Bearing No.	B.C.	C	E	F	G[1]	H	I	J	L	M	M_T	N	R	R_{TT}	S	S_T	Wt.
	mm in.		**mm** in.	**mm** in.	**mm** in.	**mm** in.	**mm** in.	**mm** in.	**mm** in.	**mm** in.	**mm** in.	**mm** in.	**mm** in.	**mm** in.	**mm** in.	**mm** in.	**mm** in.	**mm** in.	**kg** lbs.
DVC09K107S DAAC09K107S	1 7/16 in.	22209	**111.3** 4.38	**65.0** 2.56	**78.5** 3.09	**133.4** 5.25	**92.1** 3.625	**26.7** 1.05	**48.3** 1.90	**10** 7/16	**55.4** 2.18	**30.7** 1.21	**34.2** 1.34	**23.9** 0.94	**5.1** 0.20	**6.4** 0.25	**50.3** 1.98	**65.33** 2.57	**4.1** 9
DVC09K108S DAAC09K108S	1 ½ in.																		
DVC09K040S DAAC09K040S	**40 mm**																		
DVC10K111S DAAC10K111S	1 11/16 in.	22210	**130.3** 5.13	**70.1** 2.76	**91.9** 3.62	**155.7** 6.13	**107.95** 4.250	**26.7** 1.05	**58.9** 2.32	**10** 7/16	**60.1** 2.37	**33.5** 1.32	**37.6** 1.48	**25.4** 1.00	**5.1** 0.20	**7.1** 0.28	**55.1** 2.17	**71.33** 2.81	**4.5** 10
DVC10K112S DAAC10K112S	1 ¾ in.																		
DVC10K045S DAAC10K045S	**45 mm**																		
DVC11K115S DAAC11K115S	1 15/16 in.	22211	**136.7** 5.38	**74.9** 2.95	**96.5** 3.80	**162.1** 6.38	**114.3** 4.500	**31.5** 1.24	**62.2** 2.45	**10** 7/16	**63.2** 2.49	**35.6** 1.40	**39.1** 1.54	**25.4** 1.00	**4.1** 0.16	**9.6** 0.38	**58.9** 2.32	**76.33** 3.01	**5.0** 11
DVC11K200S DAAC11K200S	2 in.																		
DVC11K050S DAAC11K050S	**50 mm**																		
DVC13K203S DAAC13K203S	2 3/16 in.	22213	**152.4** 6.00	**82.6** 3.35	**107.7** 4.24	**181.1** 7.13	**127.0** 5.000	**37.3** 1.47	**84.8** 3.34	**12** 1/2	**65.5** 2.58	**39.6** 1.56	**43.7** 1.72	**25.4** 1.00	**-2.8** -0.11	**13.2** 0.52	**65.0** 2.56	**82.83** 3.26	**7.3** 16
DVC13K204S DAAC13K204S	2 ¼ in.																		
DVC13K060S DAAC13K060S	**60 mm**																		
DVC15K207S DAAC15K207S	2 7/16 in.	22215	**165.1** 6.50	**98.0** 3.86	**116.8** 4.60	**193.8** 7.63	**139.7** 5.500	**32.3** 1.27	**79.0** 3.11	**12** 1/2	**69.9** 2.75	**43.9** 1.73	**48.7** 1.92	**31.8** 1.25	**3.6** 0.14	**17.6** 0.69	**72.9** 2.87	**92.33** 3.64	**8.2** 18
DVC15K208S DAAC15K208S	2 ½ in.																		
DVC15K065S DAAC15K065S	**65 mm**																		
DVC17K215S DAAC17K215S	2 15/16 in.	22217	**190.5** 7.50	**110.0** 4.33	**134.6** 5.30	**222.3** 8.75	**161.9** 6.375	**32.5** 1.28	**90.2** 3.55	**16** 5/8	**79.8** 3.14	**49.8** 1.96	**50.2** 1.98	**35.1** 1.38	**2.3** 0.09	**24.1** 0.95	**82.0** 3.23	**104.33** 4.12	**11.3** 25
DVC17K300S DAAC17K300S	3 in.																		
DVC17K075S DAAC17K075S	**75 mm**																		

Continued on next page.

DVC AND DAAC PILOTED FLANGE CARTRIDGES – *continued*

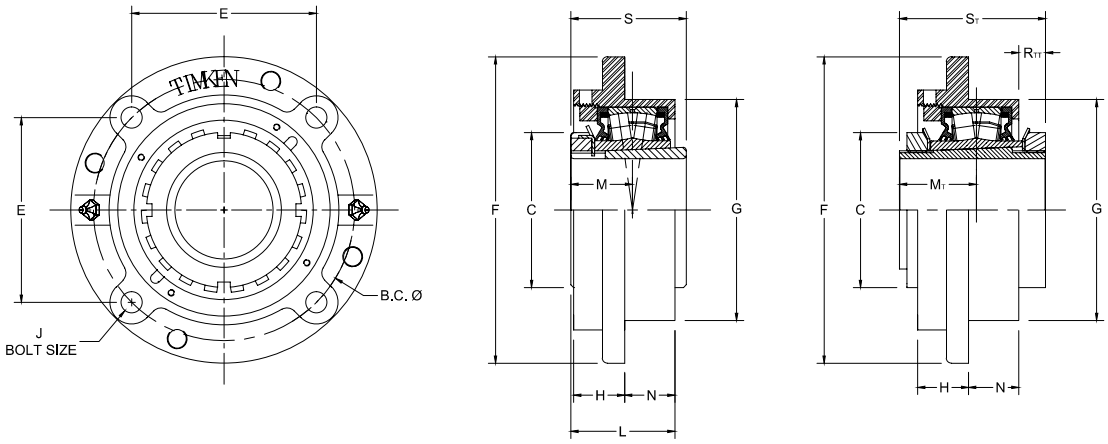

Bearing Part No.	Shaft Dia.	Bearing No.	B.C.	C	E	F	G[1]	H	I	J	L	M	M_T	N	R	R_{TT}	S	S_T	Wt.
	mm in.		**mm** in.	**mm** in.	**mm** in.	**mm** in.	**mm** in.	**mm** in.	**mm** in.	**mm** in.	**mm** in.	**mm** in.	**mm** in.	**mm** in.	**mm** in.	**mm** in.	**mm** in.	**mm** in.	**kg** lbs.
DVC20K307S DAAC20K307S	3 7/16 in.	22220	**219.2** 8.63	**130.0** 5.12	**154.9** 6.10	**260.4** 10.25	**187.3** 7.375	**41.1** 1.62	**106.2** 4.18	**20** 3/4	**91.9** 3.62	**58.4** 2.30	**63.6** 2.51	**35.1** 1.38	**5.1** 0.20	**24.7** 0.97	**97.0** 3.82	**121.83** 4.80	**16.8** 37
DVC20K308S DAAC20K308S	3 1/2 in.																		
DVC20K090S DAAC20K090S	**90 mm**																		
DVC22K315S DAAC22K315S	3 15/16 in.	22222	**238.3** 9.38	**145.0** 5.71	**168.4** 6.63	**276.4** 10.88	**206.4** 8.125	**48.0** 1.89	**116.8** 4.60	**20** 3/4	**100.1** 3.94	**63.0** 2.48	**65.8** 2.59	**38.1** 1.50	**4.6** 0.18	**27.8** 1.09	**104.9** 4.13	**130.7** 5.15	**26.3** 58
DVC22K400S DAAC22K400S	4 in.																		
DVC22K100S DAAC22K100S	**100 mm**																		
DVC26K407S[2] DAAC26K407S[2]	4 7/16 in.	22226	**298.5** 11.75[2]	**165.1** 6.50	**149.4** 5.88[2]	**342.9** 13.50	**260.4** 10.250	**47.0** 1.85	**137.9** 5.43	**20** 3/4[2]	**116.8** 4.60	**71.9** 2.83	**76.6** 3.01	**48.3** 1.90	**4.1** 0.16	**28.2** 1.11	**120.9** 4.76	**149.65** 5.89	**34.5** 76
DVC26K408S[2] DAAC26K408S[2]	4 1/2 in.																		
DVC26K115S[2] DAAC26K115S[2]	**115 mm**																		

[1]Pilot tolerance: +0/-0.05 mm (+0/-0.002 in.).
[2]Six-bolt housing.

TACK AND TAACK PILOTED FLANGE CARTRIDGES

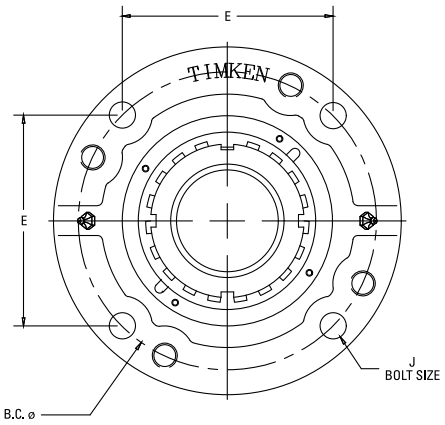

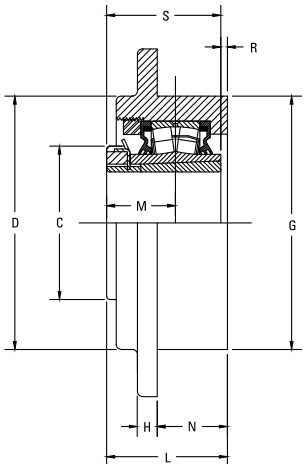

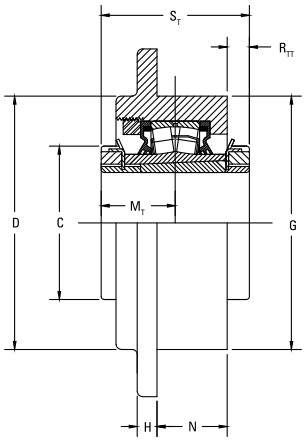

Bearing Part No.[1]	Shaft Dia.	Bearing No.	B.C.	C	D	E	F	G[2]	H	J	L	M	M_T	N	R	R_{TT}	S	S_T	Wt.
	mm in.		**mm** in.	**mm** in.	**mm** in.	**mm** in.	**mm** in.	**mm** in.	**mm** in.	**mm** in.	**mm** in.	**mm** in.	**mm** in.	**mm** in.	**mm** in.	**mm** in.	**mm** in.	**mm** in.	**mm** in.	**kg** lbs.
TACK10K111S TAACK10K111S	1 11/16 in.	22210	**152.4** 6.00	**70.0** 2.76	**127.0** 5.00	**107.7** 4.24	**181.1** 7.13	**127.0** 5.000	**12.4** 0.50	**12** 1/2	**60.1** 2.37	**33.5** 1.32	**37.6** 1.48	**25.4** 1.00	**-5.1** -0.20	**7.1** 0.28	**55.0** 2.17	**71.3** 2.81	**3.8** 8.4
TACK10K112S TAACK10K112S	1 3/4 in.																		
TACK10K045S TAACK10K045S	**45 mm**																		
TACK11K115S TAACK11K115S	1 15/16 in.	22211	**152.4** 6.00	**75.0** 2.95	**127.0** 5.00	**107.7** 4.24	**181.1** 7.13	**127.0** 5.000	**14.2** 0.56	**12** 1/2	**71.9** 2.83	**35.5** 1.40	**39.1** 1.54	**39.7** 1.56	**-13.0** -0.51	**1.0** 0.04	**59.0** 2.32	**76.3** 3.01	**5.8** 12.8
TACK11K200S TAACK11K200S	2 in.																		
TACK11K050S TAACK11K050S	**50 mm**																		
TACK12K055S TAACK12K055S	**55 mm**	22212	**165.1** 6.50	**80.0** 3.15	**139.7** 5.50	**116.7** 4.60	**193.8** 7.63	**139.7** 5.500	**12.4** 0.50	**12** 1/2	**67.6** 2.66	**37.5** 1.48	**41.1** 1.62	**25.4** 1.00	**-5.6** -0.22	**7.1** 0.28	**62.0** 2.44	**78.3** 3.08	**7.4** 16.4
TACK13K203S TAACK13K203S	2 3/16 in.	22213	**165.1** 6.50	**85.0** 3.35	**139.7** 5.50	**116.7** 4.60	**193.8** 7.63	**139.7** 5.500	**12.4** 0.50	**12** 1/2	**78.0** 3.07	**39.5** 1.55	**43.7** 1.72	**42.9** 1.69	**-13.0** -0.51	**0.5** 0.02	**65.0** 2.56	**82.8** 3.26	**8.5** 18.8
TACK13K204S TAACK13K204S	2 1/4 in.																		
TACK13K060S TAACK13K060S	**60 mm**																		
TACK15K207S TAACK15K207S	2 7/16 in.	22215	**190.5** 7.50	**98.0** 3.86	**162.1** 6.38	**134.7** 5.30	**222.3** 8.75	**161.9** 6.375	**16.0** 0.63	**16** 5/8	**82.7** 3.26	**44.0** 1.73	**48.7** 1.92	**47.6** 1.88	**-9.9** -0.39	**4.6** 0.18	**73.0** 2.87	**92.3** 3.63	**9.6** 21.1
TACK15K208S TAACK15K208S	2 1/2 in.																		
TACK15K065S TAACK15K065S	**65 mm**																		
TACK16K211S TAACK16K211S	2 11/16 in.	22216	**219.2** 8.63	**105.0** 4.13	**187.5** 7.38	**154.9** 6.10	**260.4** 10.25	**187.3** 7.375	**19.1** 0.75	**20** 3/4	**79.0** 3.11	**47.5** 1.87	**49.7** 1.96	**34.9** 1.38	**-1.0** -0.04	**18.0** 0.71	**78.0** 3.07	**99.3** 3.91	**11.7** 25.8
TACK16K212S TAACK16K212S	2 3/4 in.																		
TACK16K070S TAACK16K070S	**70 mm**																		
TACK17K215S TAACK17K215S	2 15/16 in.	22217	**219.2** 8.63	**110.0** 4.33	**187.5** 7.38	**154.9** 6.10	**260.4** 10.25	**187.3** 7.375	**19.1** 0.75	**20** 3/4	**80.5** 3.17	**50.0** 1.97	**51.7** 2.03	**34.9** 1.38	**1.5** 0.06	**22.4** 0.88	**82.0** 3.23	**104.3** 4.11	**13.8** 30.5
TACK17K300S TAACK17K300S	3 in.																		
TACK17K075S TAACK17K075S	**75 mm**																		

[1] Double-nut (TAA/DAA) part number shown. Single-nut (TA/DV) version available upon request.
[2] Pilot tolerance: +0/-0.05 mm (+0/-0.002 in.).
[3] Six-bolt housing.

Continued on next page.

TACK AND TAACK PILOTED FLANGE CARTRIDGES – *continued*

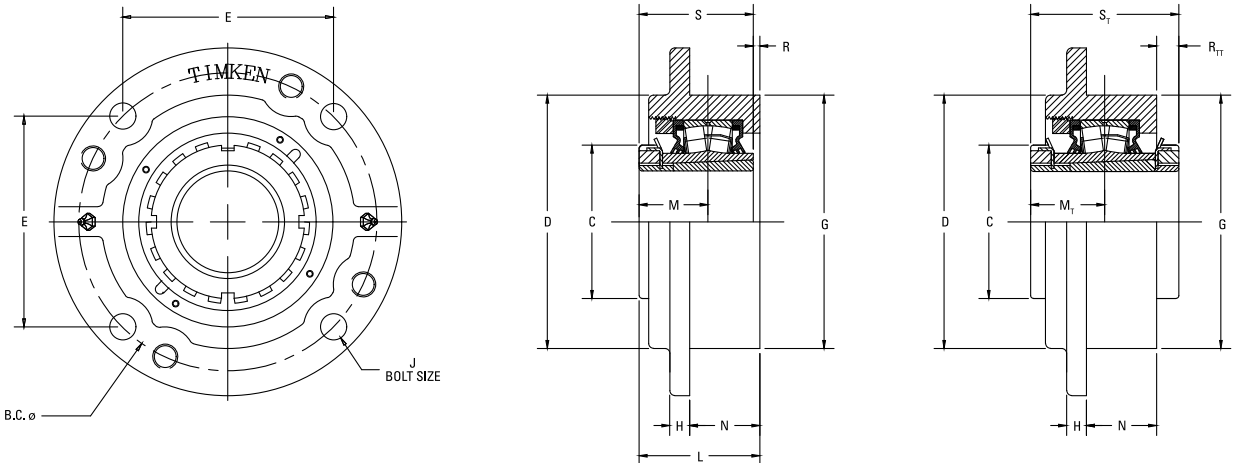

Bearing Part No.[1]	Shaft Dia.	Bearing No.	B.C.	C	D	E	F	G[2]	H	J	L	M	M_T	N	R	R_{TT}	S	S_T	Wt.
	mm in.		**mm** in.	**mm** in.	**mm** in.	**mm** in.	**mm** in.	**mm** in.	**mm** in.	**mm** in.	**mm** in.	**mm** in.	**mm** in.	**mm** in.	**mm** in.	**mm** in.	**mm** in.	**mm** in.	**kg** lbs.
TACK18K080S TAACK18K080S	**80 mm**	22218	**238.3** 9.38	**120.0** 4.72	**203.2** 8.00	**168.4** 6.63	**276.4** 10.88	**206.5** 8.125	**19.1** 0.75	**20** 3/4	**86.9** 3.42	**52.0** 2.05	**54.4** 2.14	**34.9** 1.38	**-0.8** -0.03	**19.6** 0.77	**86.0** 3.39	**108.8** 4.28	**15.9** 35.1
TACK18K303S TAACK18K303S	3 3⁄16 in.																		
TACK18K304S TAACK18K304S	3 ¼ in.																		
TACK20K307S TAACK20K307S	3 7⁄16 in.	22220	**238.3** 9.38	**130.0** 5.12	**206.5** 8.13	**168.4** 6.63	**276.4** 10.88	**206.5** 8.125	**25.4** 1.00	**20** 3/4	**110.1** 4.33	**59.4** 2.34	**62.7** 2.47	**57.2** 2.25	**-13.0** -0.51	**8.6** 0.34	**97.0** 3.82	**121.8** 4.80	**26.9** 59.2
TACK20K308S TAACK20K308S	3 ½ in.																		
TACK20K090S TAACK20K090S	**90 mm**																		
TACK22K315S[3] TAACK22K315S[3]	3 15⁄16 in.	22222	**298.5** 11.75	**145.0** 5.71	**260.4** 10.25	**149.2** 5.88[2]	**342.9** 13.50	**260.4** 10.250	**25.4** 1.00	**20** 3/4[2]	**119.1** 4.69	**63.0** 2.48	**67.7** 2.67	**68.1** 2.68	**-14.2** -0.56	**6.9** 0.27	**105.0** 4.13	**130.7** 5.15	**37.8** 83.4
TACK22K400S[3] TAACK22K400S[3]	4 in.																		
TACK22K100S[3] TAACK22K100S[3]	**100 mm**																		
TACK24K403S[3] TAACK24K403S[3]	4 3⁄16 in.	22224	**323.9** 12.75	**155.0** 6.10	**260.4** 10.25	**161.9** 6.38[2]	**374.7** 14.75	**279.4** 11.000	**25.4** 1.00	**24** 7/8[2]	**115.9** 4.56	**67.0** 2.64	**70.3** 2.77	**48.3** 1.90	**-3.81** -0.15	**20.1** 0.79	**112.0** 4.41	**139.2** 5.48	**41.6** 91.8
TACK24K404S[3] TAACK24K404S[3]	4 ¼ in.																		
TACK24K110S[3] TAACK24K110S[3]	**110 mm**																		
TACK26K407S[3] TAACK26K407S[3]	4 7⁄16 in.	22226	**323.9** 12.75	**165.0** 6.50	**266.7** 10.50	**161.9** 6.38[2]	**374.7** 14.75	**279.4** 11.000	**25.4** 1.00	**24** 7/8[2]	**129.8** 5.11	**72.0** 2.83	**76.6** 3.01	**77.9** 3.07	**-8.9** -0.35	**15.2** 0.60	**121.0** 4.76	**149.7** 5.89	**45.4** 100.2
TACK26K408S[3] TAACK26K408S[3]	4 ½ in.																		
TACK26K115S[3] TAACK26K115S[3]	**115 mm**																		
TACK28K415S[3] TAACK28K415S[3]	4 15⁄16 in.	22228	**368.3** 14.50	**180.0** 7.09	**304.8** 12.00	**184.2** 7.25	**431.8** 17.00	**330.2** 13.000	**25.4** 1.00	**24** 7/8[2]	**133.5** 5.25	**77.5** 3.05	**85.3** 3.36	**65.0** 2.56	**-2.3** -0.09	**20.1** 0.79	**131.0** 5.16	**161.2** 6.35	**83.1** 183.3
TACK28K500[3] TAACK28K500S[3]	5 in.																		
TACK28K125S[3] TAACK28K125S[3]	**125 mm**																		
TAACK32K507S[3]	5 7⁄16 in.	23132	**419.1** 16.50	**210.0** 8.27	**330.2** 13.00	**209.6** 8.25	**482.6** 19.00	**355.6** 14.000	**31.8** 1.25	**M24** 1[2]	**173.2** 6.82	–	**90.5** 3.56	**104.9** 4.13	–	**11.7** 0.46	–	**185.0** 7.28	**110.7** 244
TAACK34K515S[3]	5 15⁄16 in.	23134	**431.8** 17.00	**220.0** 8.66	**355.6** 14.00	**215.9** 8.50	**482.6** 19.00	**381.0** 15.000	**31.8** 1.25	**M24** 1[2]	**177.3** 6.98	–	**94.6** 3.73	**104.9** 4.13	–	**9.4** 0.37	–	**186.7** 7.35	**112.5** 248
TAACK34K600S[3]	6 in.																		
TAACK36K607S[3]	6 7⁄16 in.	23136	**431.8** 17.00	**230.0** 9.06	**355.6** 14.00	**215.9** 8.50	**482.6** 19.00	**381.0** 15.000	**31.8** 1.25	**M24** 1[2]	**182.3** 7.18	–	**98.9** 3.90	**104.9** 4.13	–	**14.2** 0.56	–	**196.7** 7.74	**130.4** 287.4

[1] Double-nut (TAA/DAA) part number shown. Single-nut (TA/DV) version available upon request.
[2] Pilot tolerance: +0/-0.05 mm (+0/-0.002 in.).
[3] Six-bolt housing.

TAFC AND TAAFC SQUARE PILOTED FLANGE CARTRIDGES

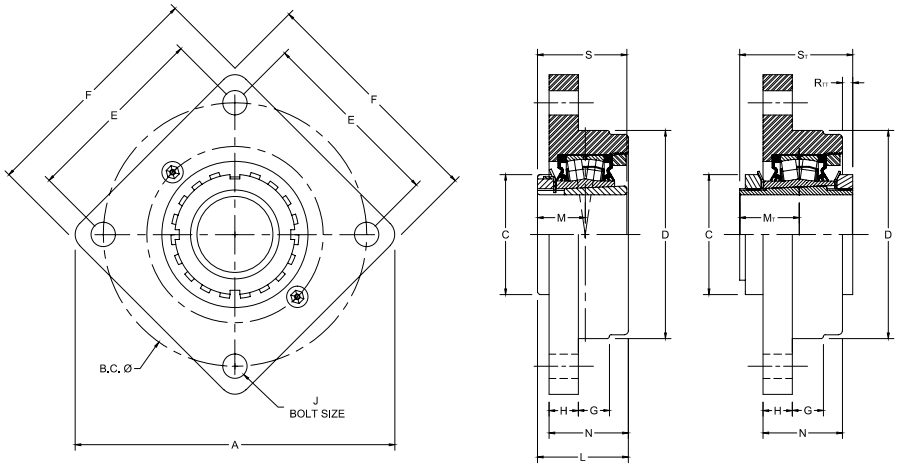

Bearing Part No.	Shaft Dia.	Bearing No.	A	B.C.	C	D[1]	E	F	G	H	J	L	M	M_T	N	R_{TT}	S	S_T	Wt.
	mm in.		**mm** in.	**mm** in.	**mm** in.	**mm** in.	**mm** in.	**mm** in.	**mm** in.	**mm** in.	**mm** in.	**mm** in.	**mm** in.	**mm** in.	**mm** in.	**mm** in.	**mm** in.	**mm** in.	**kg** lbs.
TAFC15K207S TAAFC15K207S	2 7/16 in.	22215	**255.0** 10.04	**215.1** 8.47	**98.0** 3.86	**169.9** 6.690	**152.4** 6.00	**192.0** 7.56	**25.4** 1.00	**23.9** 0.94	**16** 5/8	**79.5** 3.13	**43.9** 1.73	**48.7** 1.92	**64.8** 2.55	**8.0** 0.32	**72.9** 2.87	**92.33** 3.64	**11.3** 25
TAFC15K208S TAAFC15K208S	2 1/2 in.																		
TAFC15K065S TAAFC15K065S	**65 mm**																		
TAFC17K215S TAAFC17K215S	2 15/16 in.	22217	**282.4** 11.12	**240.0** 9.45	**110.0** 4.33	**190.0** 7.480	**169.7** 6.68	**212.1** 8.35	**25.4** 1.00	**25.4** 1.00	**16** 5/8	**88.6** 3.49	**49.8** 1.96	**50.2** 1.98	**69.9** 2.75	**15.3** 0.60	**82.0** 3.23	**104.33** 4.12	**13.6** 30
TAFC17K300S TAAFC17K300S	3 in.																		
TAFC17K075S TAAFC17K075S	**75 mm**																		
TAFC20K307S TAAFC20K307S	3 7/16 in.	22220	**330.2** 13.00	**279.9** 11.02	**130.0** 5.12	**230.1** 9.060	**197.9** 7.79	**247.9** 9.76	**31.8** 1.25	**28.7** 1.13	**20** 3/4	**105.7** 4.16	**58.4** 2.30	**63.6** 2.51	**94.2** 3.71	**10.9** 0.43	**97.0** 3.82	**121.83** 4.80	**18.1** 40
TAFC20K308S TAAFC20K308S	3 1/2 in.																		
TAFC20K090S TAAFC20K090S	**90 mm**																		
TAFC22K315S TAAFC22K315S	3 15/16 in.	22222	**367.0** 14.45	**309.9** 12.20	**145.0** 5.71	**255.0** 10.039	**219.2** 8.63	**274.3** 10.80	**44.5** 1.75	**26.4** 1.04	**20** 3/4	**113.0** 4.45	**63.0** 2.48	**65.8** 2.59	**101.1** 3.98	**14.9** 0.59	**104.9** 4.13	**130.7** 5.15	**27.2** 60
TAFC22K400S TAAFC22K400S	4 in.																		
TAFC22K100S TAAFC22K100S	**100 mm**																		
TAFC26K407S TAAFC26K407S	4 7/16 in.	22226	**411.5** 16.20	**355.1** 13.98	**165.1** 6.50	**290.0** 11.417	**251.0** 9.88	**298.5** 11.75	**41.9** 1.65	**32.0** 1.26	**24** 7/8	**130.6** 5.14	**71.9** 2.83	**76.6** 3.01	**114.3** 4.50	**14.4** 0.56	**120.9** 4.76	**149.65** 5.89	**42.6** 94
TAFC26K408S TAAFC26K408S	4 1/2 in.																		
TAFC26K115S TAAFC26K115S	**115 mm**																		

[1] Pilot tolerance: +0/-0.05 mm (+0/-0.002 in.).

TAFB AND TAAFB SQUARE FLANGE BLOCKS

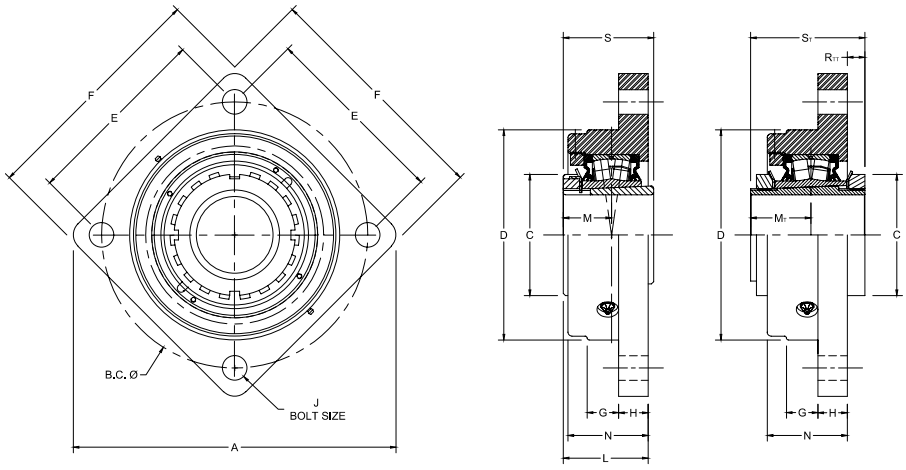

Bearing Part No.	Shaft Dia.	Bearing No.	A	B.C.	C	D	E	F	G	H	J	L	M	M_T	N	R_{T1}	S	S_T	Wt.
	mm in.		**mm** in.	**mm** in.	**mm** in.	**mm** in.	**mm** in.	**mm** in.	**mm** in.	**mm** in.	**mm** in.	**mm** in.	**mm** in.	**mm** in.	**mm** in.	**mm** in.	**mm** in.	**mm** in.	**kg** lbs.
TAFB15K207S TAAFB15K207S	2 7/16 in.	22215	**255.0** 10.04	**215.1** 8.47	**98.0** 3.86	**169.9** 6.69	**152.4** 6.00	**192.0** 7.56	**25.4** 1.00	**23.9** 0.94	**16** 5/8	**73.7** 2.90	**43.9** 1.73	**48.7** 1.92	**64.8** 2.55	**13.8** 0.54	**72.9** 2.87	**92.33** 3.64	**11.3** 25
TAFB15K208S TAAFB15K208S	2 1/2 in.																		
TAFB15K065S TAAFB15K065S	**65 mm**																		
TAFB17K215S TAAFB17K215S	2 15/16 in.	22217	**282.4** 11.12	**240.0** 9.45	**110.0** 4.33	**190.0** 7.48	**169.7** 6.68	**212.1** 8.35	**25.4** 1.00	**25.4** 1.00	**16** 5/8	**88.6** 3.49	**49.8** 1.96	**50.2** 1.98	**69.9** 2.75	**15.3** 0.60	**82.0** 3.23	**104.33** 4.12	**13.6** 30
TAFB17K300S TAAFB17K300S	3 in.																		
TAFB17K075S TAAFB17K075S	**75 mm**																		
TAFB20K307S TAAFB20K307S	3 7/16 in.	22220	**330.2** 13.00	**280.0** 11.02	**130.0** 5.12	**230.1** 9.06	**197.9** 7.79	**247.9** 9.76	**31.8** 1.25	**28.7** 1.13	**20** 3/4	**105.7** 4.16	**58.4** 2.30	**63.6** 2.51	**94.2** 3.71	**10.9** 0.43	**97.0** 3.82	**121.83** 4.80	**18.1** 40
TAFB20K308S TAAFB20K308S	3 1/2 in.																		
TAFB20K090S TAAFB20K090S	**90 mm**																		
TAFB22K315S TAAFB22K315S	3 15/16 in.	22222	**367.0** 14.45	**309.9** 12.20	**145.0** 5.71	**255.0** 10.04	**219.2** 8.63	**279.4** 11.00	**44.5** 1.75	**26.4** 1.04	**20** 3/4	**113.0** 4.45	**63.0** 2.48	**65.8** 2.59	**101.1** 3.98	**14.9** 0.59	**104.9** 4.13	**130.7** 5.15	**27.2** 60
TAFB22K400S TAAFB22K400S	4 in.																		
TAFB22K100S TAAFB22K100S	**100 mm**																		
TAFB26K407S TAAFB26K407S	4 7/16 in.	22226	**411.5** 16.20	**354.8** 13.97	**165.1** 6.50	**290.0** 11.42	**251.0** 9.88	**298.5** 11.75	**41.9** 1.65	**32.0** 1.26	**24** 7/8	**130.6** 5.14	**71.9** 2.83	**76.6** 3.01	**114.3** 4.50	**14.4** 0.56	**120.9** 4.76	**149.65** 5.89	**42.6** 94
TAFB26K408S TAAFB26K408S	4 1/2 in.																		
TAFB26K115S TAAFB26K115S	**115 mm**																		

TAFNL SERIES FLANGE BLOCKS - TAPERED BORE EQUIVALENT

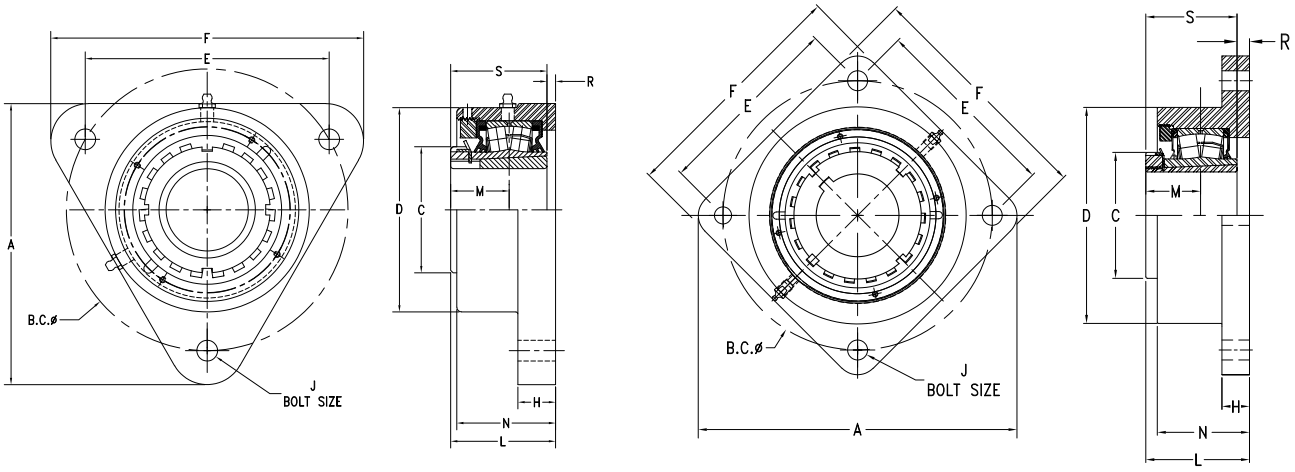

Bearing Part No.	Shaft Dia.	Bearing No.	A	B.C	C	D	E	F	H	J	L	M	N	R	S	Wt.
	mm in.		**mm** in.	**mm** in.	**mm** in.	**mm** in.	**mm** in.	**mm** in.	**mm** in.	**mm** in.	**mm** in.	**mm** in.	**mm** in.	**mm** in.	**mm** in.	**kg** lbs.
TAFNL09K040S[1] TAFNL09K107S[1] TAFNL09K108S[1]	**40 mm** 1 7⁄16 in. 1 ½ in.	22209	**161.5** 6.36	**160.0** 6.3	**65** 2.56	**118.4** 4.66	**138.6** 5.46	**179** 7.05	**12** 0.47	**12** ½	**57.0** 2.24	**30.8** 1.21	**53.2** 2.10	**19.6** 0.77	**50.3** 1.98	**4.0** 8.8
TAFNL10K045S[1] TAFNL10K111S[1] TAFNL10K112S[1]	**45 mm** 1 11⁄16 in. 1 ¾ in.	22210	**161.5** 6.36	**160** 6.3	**70** 2.76	**118.4** 4.66	**138.6** 5.46	**179** 7.05	**15** 0.59	**12** ½	**62.6** 2.46	**33.6** 1.32	**56.2** 2.21	**21.3** 0.84	**54.8** 2.16	**5.0** 11
TAFNL11K050S[1] TAFNL11K115S[1] TAFNL11K200S[1]	**50 mm** 1 15⁄16 in. 2 in.	22211	**172.3** 6.78	**170** 6.69	**75** 2.95	**121.9** 4.8	**147.2** 5.8	**192** 7.56	**15** 0.59	**12** ½	**65.1** 2.56	**35.5** 1.40	**60.0** 2.36	**23.4** 0.92	**59** 2.32	**5.0** 11
TAFNL12K055S[1]	**55 mm**	22212	**173.2** 6.82	**180** 7.09	**80** 3.15	**127.0** 5.00	**155.9** 6.14	**210** 8.27	**15** 0.59	**12** ½	**67.8** 2.67	**37.5** 1.48	**59.0** 2.32	**24.4** 0.96	**62** 11.9	**5.4** 11
TAFNL13K060S TAFNL13K203S TAFNL13K204S	**60 mm** 2 3⁄16 in. 2 ¼ in.	22213	**200.2** 7.88	**190** 7.48	**85** 3.35	**137.8** 5.43	**164.5** 6.48	**223.3** 8.79	**15** 0.59	**12** ½	**70.8** 2.79	**39.5** 1.55	**66.6** 2.62	**25.7** 1.01	**65** 2.56	**6.3** 13.9
TAFNL15K065S TAFNL15K207S TAFNL15K208S	**65 mm** 2 7⁄16 in. 2 ½ in.	22215	**258.2** 10.16	**215.0** 8.46	**98.0** 3.86	**169.9** 6.69	**152.0** 5.98	**190.0** 7.48	**25** 0.98	**16** ⅝	**74.0** 2.91	**44.0** 1.73	**65.4** 2.58	**29** 1.14	**73.0** 2.87	**11.3** 25
TAFNL16K070S TAFNL16K211S TAFNL16K212S	**70 mm** 2 11⁄16 in. 2 ¾ in.	22216	**258.2** 10.16	**215.0** 8.46	**105.0** 4.13	**170.0** 6.69	**152.0** 5.98	**190.0** 7.48	**25** 0.98	**16** ⅝	**79.2** 3.12	**47.5** 1.87	**65.4** 2.58	**30.5** 1.20	**78.0** 3.07	**11.3** 25
TAFNL17K075S TAFNL17K215S TAFNL17K300S	**75 mm** 2 15⁄16 in. 3 in.	22217	**279.4** 11.00	**240.0** 9.47	**110.0** 4.33	**190.0** 7.48	**170.0** 6.69	**210.0** 8.27	**25** 0.98	**16** ⅝	**86.9** 3.42	**50.0** 1.97	**73.1** 2.88	**32.0** 1.26	**82.0** 3.23	**13.6** 30
TAFNL18K080S TAFNL18K303S TAFNL18K304S	**80 mm** 3 3⁄16 in. 3 ¼ in.	22218	**279.4** 11.00	**240.0** 9.47	**120.0** 4.72	**190.0** 7.48	**170.0** 6.69	**210.0** 8.27	**25.0** 0.98	**16** ⅝	**87.4** 3.44	**52.0** 2.05	**73.1** 2.88	**34** 1.34	**86.0** 3.39	**13.6** 30
TAFNL20K090S TAFNL20K307S TAFNL20K308S	**90 mm** 3 7⁄16 in. 3 ½ in.	22220	**332.5** 13.09	**279.9** 11.02	**130.0** 5.12	**198.1** 7.80	**197.9** 7.79	**250.0** 9.87	**30.0** 1.18	**20** ¾	**103.4** 4.08	**59.4** 2.34	**90.8** 3.58	**37.6** 1.48	**97.0** 3.82	**18.1** 40
TAFNL22K100S TAFNL22K315S TAFNL22K400S	**100 mm** 3 15⁄16 in. 4 in.	22222	**360.8** 14.21	**309.9** 12.20	**145.0** 5.71	**218.4** 8.60	**219.1** 8.63	**270.0** 10.63	**30.0** 1.18	**20** ¾	**112.5** 4.43	**62.7** 2.47	**99.6** 3.92	**42.2** 1.66	**105.0** 4.13	**27.2** 60

[1]Three-bolt triangle housing.

DVF AND DAAF SQUARE FLANGE BLOCKS

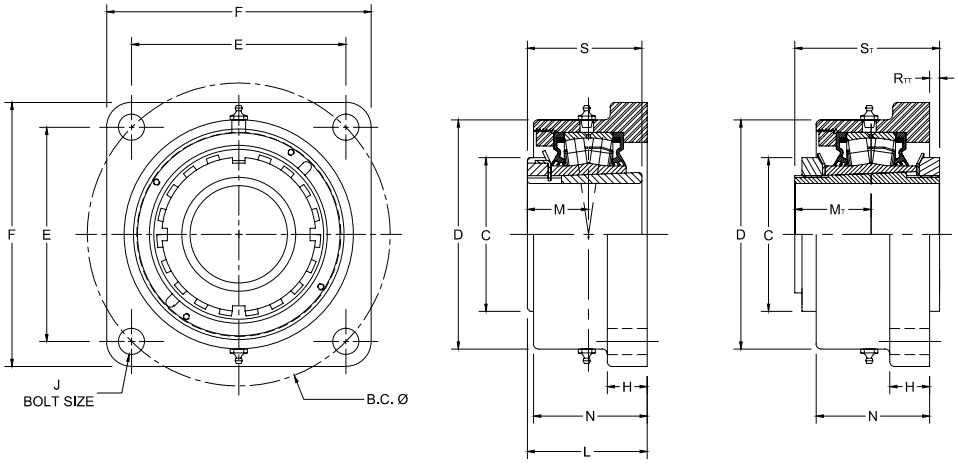

Bearing Part No.	Shaft Dia.	Bearing No.	B.C.	C	D	E	F	H	J	L FIX	L EXP	M	M_T	N	R_{TT}	S	S_T	Wt.
	mm in.		**mm** in.	**mm** in.	**mm** in.	**mm** in.	**mm** in.	**mm** in.	**mm** in.	**mm** in.	**mm** in.	**mm** in.	**mm** in.	**mm** in.	**mm** in.	**mm** in.	**mm** in.	**kg** lbs.
DVF09K107S DAAF09K107S	1 7⁄16 in.	22209	**125.7** 4.95	**65.0** 2.56	**101.6** 4.00	**88.9** 3.50	**117.6** 4.63	**19.1** 0.75	**12** 1⁄2	**61.1** 2.41	**62.4** 2.46	**30.7** 1.21	**34.2** 1.34	**56.1** 2.21	**0.7** 0.03	**50.3** 1.98	**65.33** 2.57	**5.0** 11
DVF09K108S DAAF09K108S	1 1⁄2 in.	22209	**148.3**	**65.0**	**107.8**	**104.9**	**136.7**	**19.1**	**12**	**61.1**	**62.4**	**30.7**	**34.2**	**56.1**	**0.7**	**50.3**	**65.33**	**5.0**
DVF09K040S DAAF09K040S	**40 mm**		5.84	2.56	4.25	4.13	5.38	0.75	1⁄2	2.41	2.46	1.21	1.34	2.21	0.03	1.98	2.57	11
DVF10K111S DAAF10K111S	1 11⁄16 in.	22210	**148.3** 5.84	**70.1** 2.76	**118.4** 4.66	**104.9** 4.13	**136.7** 5.38	**22.4** 0.88	**12** 1⁄2	**59.0** 2.32	**60.3** 2.37	**33.5** 1.32	**37.6** 1.48	**52.3** 2.06	**8.2** 0.32	**55.1** 2.17	**71.33** 2.81	**5.5** 12
DVF10K112S DAAF10K112S	1 3⁄4 in.	22210	**157.2**	**70.1**	**118.4**	**111.3**	**143.0**	**22.4**	**12**	**59.0**	**60.3**	**33.5**	**37.6**	**52.3**	**8.2**	**55.1**	**71.33**	**5.5**
DVF10K045S DAAF10K045S	**45 mm**		6.19	2.76	4.66	4.38	5.63	0.88	1⁄2	2.32	2.37	1.32	1.48	2.06	0.32	2.17	2.81	12
DVF11K115S DAAF11K115S	1 15⁄16 in.	22211																
DVF11K200S DAAF11K200S	2 in.	22211	**157.2** 6.19	**74.9** 2.95	**121.9** 4.80	**111.3** 4.38	**139.7** 5.50	**22.4** 0.88	**12** 1⁄2	**67.1** 2.64	**68.4** 2.69	**35.6** 1.40	**39.1** 1.54	**65.0** 2.56	**5.7** 0.23	**58.9** 2.32	**76.33** 3.01	**5.44** 12
DVF11K050S DAAF11K050S	**50 mm**	22211																
DVF13K203S DAAF13K203S	2 3⁄16 in.	22213																
DVF13K204S DAAF13K204S	2 1⁄4 in.	22213	**175.0** 6.89	**85.1** 3.35	**137.9** 5.43	**124.0** 4.88	**157.2** 6.19	**25.4** 1.00	**16** 5⁄8	**70.8** 2.79	**72.9** 2.87	**39.6** 1.56	**43.7** 1.72	**66.8** 2.63	**7.9** 0.31	**65.0** 2.56	**82.83** 3.26	**6.8** 15
DVF13K060S DAAF13K060S	**60 mm**	22213																
DVF15K207S DAAF15K207S	2 7⁄16 in.	22215																
DVF15K208S DAAF15K208S	2 1⁄2 in.	22215	**193.0** 7.60	**98.0** 3.86	**146.0** 5.75	**136.7** 5.38	**168.4** 6.63	**25.4** 1.00	**16** 5⁄8	**81.4** 3.20	**83.5** 3.29	**43.9** 1.73	**48.7** 1.92	**72.4** 2.85	**6.1** 0.24	**72.9** 2.87	**92.33** 3.64	**8.2** 18
DVF15K065S DAAF15K065S	**65 mm**	22215																

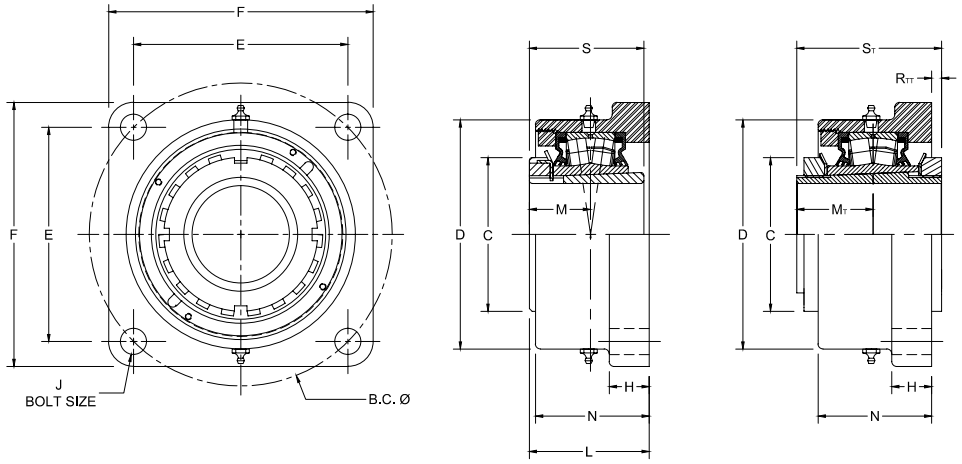

Bearing Part No.	Shaft Dia.	Bearing No.	B.C.	C	D	E	F	H	J	L FIX	L EXP	M	M_T	N	R_{TT}	S	S_T	Wt.
	mm in.		**mm** in.	**mm** in.	**mm** in.	**mm** in.	**mm** in.	**mm** in.	**mm** in.	**mm** in.	**mm** in.	**mm** in.	**mm** in.	**mm** in.	**mm** in.	**mm** in.	**mm** in.	**kg** lbs.
DVF17K215S DAAF17K215S	2 15⁄16 in.	22217	**215.4** 8.48	**110.0** 4.33	**170.7** 6.72	**152.4** 6.00	**189.0** 7.44	**26.9** 1.06	**20** 3⁄4	**87.9** 3.46	**90.0** 3.54	**49.8** 1.96	**50.2** 1.98	**77.0** 3.03	**16.0** 0.63	**82.0** 3.23	**104.33** 4.12	**12.7** 28
DVF17K300S DAAF17K300S	3 in.																	
DVF17K075S DAAF17K075S	**75 mm**																	
DVF20K307S DAAF20K307S	3 7⁄16 in.	22220	**251.5** 9.90	**130.0** 5.12	**193.8** 7.63	**177.8** 7.00	**219.2** 8.63	**33.3** 1.31	**20** 3⁄4	**100.9** 3.97	**103.0** 4.06	**58.4** 2.30	**63.6** 2.51	**84.1** 3.31	**15.7** 0.62	**97.0** 3.82	**121.83** 4.80	**17.7** 39
DVF20K308S DAAF20K308S	3 ½ in.																	
DVF20K090S DAAF20K090S	**90 mm**																	
DVF22K315S DAAF22K315S	3 15⁄16 in.	22222	**278.4** 10.96	**145.0** 5.71	**215.9** 8.50	**196.9** 7.75	**253.2** 9.97	**38.1** 1.50	**24** 7⁄8	**119.9** 4.72	**122.0** 4.80	**63.0** 2.48	**65.8** 2.59	**103.1** 4.06	**8.0** 0.31	**104.9** 4.13	**130.7** 5.15	**24.0** 53
DVF22K400S DAAF22K400S	4 in.																	
DVF22K100S DAAF22K100S	**100 mm**																	
DVF26K407S DAAF26K407S	4 7⁄16 in.	22226	**314.5** 12.38	**165.1** 6.50	**263.7** 10.38	**222.3** 8.75	**276.4** 10.88	**38.1** 1.50	**24** 7⁄8	**124.7** 4.91	**126.8** 4.99	**71.9** 2.83	**76.6** 3.01	**106.9** 4.21	**20.3** 0.80	**120.9** 4.76	**149.65** 5.89	**34.0** 75
DVF26K408S DAAF26K408S	4 ½ in.																	
DVF26K115S DAAF26K115S	**115 mm**																	

DVFBB BRACKET FLANGE BLOCKS

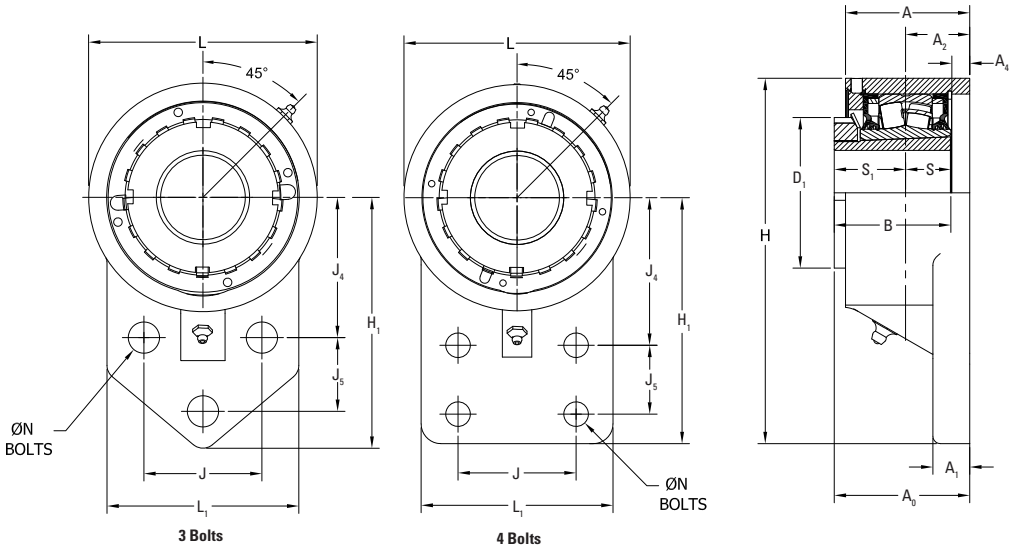

Bearing Part No.	Shaft Dia.	Bolt Pattern	Bearing No.	H	H1	J	J4	J5	L	L1	A	A0	A1	A2	A4	B	D1	S	S1	Bolt Size	Wt.
	mm in.			**mm** in.	**mm** in.	**mm** in.	**mm** in.	**mm** in.	**mm** in.	**mm** in.	**mm** in.	**mm** in.	**mm** in.	**mm** in.	**mm** in.	**mm** in.	**mm** in.	**mm** in.	**mm** in.	**mm** in.	**kg** lbs.
DVFBB09K107S	1 7⁄16 in.	**3-Bolt**	22209	**157.2** 6.19	**108.0** 4.25	**50.8** 2.00	**60.3** 2.38	**31.8** 1.25	**98.6** 3.88	**82.6** 3.25	**53.6** 2.11	**57.5** 2.27	**16.0** 0.63	**26.2** 1.03	**7.2** 0.29	**50.3** 1.98	**65.0** 2.56	**19.6** 0.77	**30.7** 1.21	**M12** 1⁄2	**2** 4.2
DVFBB09K108S	1 1⁄2 in.																				
DVFBB09K040S	**40 mm**																				
DVFBB11K115S	1 15⁄16 in.	**3-Bolt**	22211	**192.3** 7.57	**131.8** 5.19	**69.9** 2.75	**74.6** 2.94	**41.3** 1.63	**120.7** 4.75	**101.6** 4.00	**60.2** 2.37	**65.7** 2.59	**17.5** 0.69	**30.1** 1.19	**6.7** 0.27	**58.9** 2.32	**74.9** 2.95	**23.4** 0.92	**35.6** 1.40	**M12** 1⁄2	**3** 7.5
DVFBB11K200S	2 in.																				
DVFBB11K050S	**50 mm**																				
DVFBB15K207S	2 7⁄16 in.	**4-Bolt**	22215	**231.9** 9.13	**158.9** 6.26	**76.2** 3.00	**95.4** 3.75	**44.5** 1.75	**146.1** 5.75	**123.8** 4.88	**70.1** 2.76	**79.0** 3.11	**19.1** 0.75	**35.1** 1.38	**6.1** 0.24	**72.9** 2.87	**98.0** 3.86	**29.0** 1.14	**43.9** 1.73	**M16** 5⁄8	**5** 12.0
DVFBB15K208S	2 1⁄2 in.																				
DVFBB15K065S	**65 mm**																				
DVFBB16K211S	2 11⁄16 in.	**4-Bolt**	22216	**262.4** 10.33	**177.9** 7.01	**101.6** 4.00	**98.6** 3.88	**57.2** 2.25	**168.9** 6.65	**146.1** 5.75	**73.2** 2.88	**84.1** 3.31	**22.4** 0.88	**36.6** 1.44	**6.1** 0.24	**78.0** 3.07	**104.6** 4.12	**30.5** 1.20	**47.5** 1.87	**M16** 5⁄8	**9** 19.4
DVFBB17K215S	2 15⁄16 in.	**4-Bolt**	22217	**262.4** 10.33	**177.9** 7.01	**101.6** 4.00	**98.6** 3.88	**57.2** 2.25	**168.9** 6.65	**146.1** 5.75	**73.2** 2.88	**86.6** 3.41	**22.4** 0.88	**36.6** 1.44	**4.6** 0.18	**82.0** 3.23	**110.0** 4.33	**32.0** 1.26	**50.0** 1.97	**M20** 3⁄4	**8** 17.7
DVFBB17K300S	3 in.																				
DVFBB17K075S	**75 mm**																				

TAFK AND TAAFK 9000 SERIES SQUARE FLANGE BLOCKS

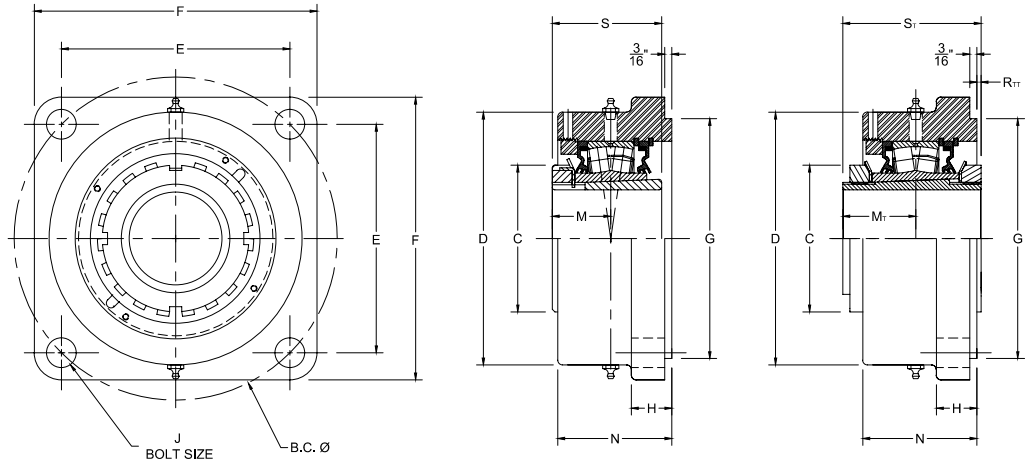

Bearing Part No.	Shaft Dia.	Bearing No.	B.C.	C	D	E	F	G[1][2][3]	H	J	L FIX	L EXP	M	M_T	N	R	R_{TT}	S	S_T	Wt.
	mm in.		**mm** in.	**mm** in.	**mm** in.	**mm** in.	**mm** in.	**mm** in.	**mm** in.	**mm** in.	**mm** in.	**mm** in.	**mm** in.	**mm** in.	**mm** in.	**mm** in.	**mm** in.	**mm** in.	**mm** in.	**kg** lbs.
TAFK11K115S TAAFK11K115S	1 15/16 in.	22211	**161.5** 6.36	**74.9** 2.95	**130.3** 5.13	**114.3** 4.50	**149.4** 5.88	**127.00** 5.000	**25.4** 1.00	**16** 5/8	**71.6** 2.82	**72.9** 2.87	**35.6** 1.40	**39.1** 1.54	**66.8** 2.63	**12.7** 0.50	**1.2** 0.05	**58.9** 2.32	**76.33** 3.01	**5.0** 11
TAFK11K200S TAAFK11K200S	2 in.																			
TAFK11K050S TAAFK11K050S	**50 mm**																			
TAFK13K203S TAAFK13K203S	2 3/16 in.	22213	**180.8** 7.12	**85.1** 3.35	**146.1** 5.75	**127.8** 5.03	**157.2** 6.19	**138.13** 5.438	**25.4** 1.00	**16** 5/8	**77.7** 3.06	**79.8** 3.14	**39.6** 1.56	**43.7** 1.72	**72.4** 2.85	**12.7** 0.50	**1.0** 0.04	**65.0** 2.56	**82.83** 3.26	**6.** 14
TAFK13K204S TAAFK13K204S	2 1/4 in.																			
TAFK13K060S TAAFK13K060S	**60 mm**																			
TAFK15K207S TAAFK15K207S	2 7/16 in.	22215	**215.9** 8.50	**98.0** 3.86	**168.9** 6.65	**152.7** 6.01	**189.0** 7.44	**160.35** 6.313	**26.9** 1.06	**20** 3/4	**84.8** 3.34	**86.9** 3.42	**43.9** 1.73	**48.7** 1.92	**76.2** 3.00	**11.9** 0.47	**2.7** 0.11	**72.9** 2.87	**92.33** 3.64	**7.7** 17
TAFK15K208S TAAFK15K208S	2 1/2 in.																			
TAFK15K065S TAAFK15K065S	**65 mm**																			
TAFK17K215S TAAFK17K215S	2 15/16 in.	22217	**241.3** 9.50	**110.0** 4.33	**193.8** 7.63	**170.7** 6.72	**212.9** 8.38	**187.33** 7.375	**33.3** 1.31	**20** 3/4	**96.3** 3.79	**98.3** 3.87	**49.8** 1.96	**50.2** 1.98	**84.1** 3.31	**14.2** 0.56	**7.6** 0.30	**82.0** 3.23	**104.33** 4.12	**10.4** 23
TAFK17K300S TAAFK17K300S	3 in.																			
TAFK17K075S TAAFK17K075S	**75 mm**																			
TAFK20K307S TAAFK20K307S	3 7/16 in.	22220	**298.5** 11.75	**130.0** 5.12	**215.9** 8.50	**211.1** 8.31	**268.2** 10.56	**225.43** 8.875	**38.1** 1.50	**24** 7/8	**114.6** 4.51	**116.6** 4.59	**58.4** 2.30	**63.6** 2.51	**103.1** 4.06	**17.5** 0.69	**2.0** 0.08	**97.0** 3.82	**121.83** 4.80	**15.9** 35
TAFK20K308S TAAFK20K308S	3 1/2 in.																			
TAFK20K090S TAAFK20K090S	**90 mm**																			
TAFK22K315S[4] TAAFK22K315S[4]	3 15/16 in.	22222	**327.2** 12.88[4]	**145.0** 5.71	**256.5** 10.10	**163.6** 6.44[4]	**384.3** 15.13	**263.53** 10.375	**38.1** 1.50	**24** 1[4]	**117.3** 4.62	**119.4** 4.70	**63.0** 2.48	**65.8** 2.59	**106.9** 4.21	**12.4** 0.49	**10.6** 0.42	**104.9** 4.13	**130.7** 5.15	**24.9** 55
TAFK22K400S[4] TAAFK22K400S[4]	4 in.																			
TAFK22K100S[4] TAAFK22K100S[4]	**100 mm**																			
TAFK26K407S[4] TAAFK26K407S[4]	4 7/16 in.	22226	**355.6** 14.00[4]	**165.1** 6.50	**284.2** 11.19	**177.8** 7.00[4]	**419.1** 16.50	**284.18** 11.188	**38.1** 1.50	**27** 1 1/8[4]	**147.3** 5.80	**149.4** 5.88	**71.9** 2.83	**76.6** 3.01	**135.1** 5.32	**26.4** 1.04	**-2.4** -0.09	**120.9** 4.76	**149.65** 5.89	**49.0** 108
TAFK26K408S[4] TAAFK26K408S[4]	4 1/2 in.																			
TAFK26K115S[4] TAAFK26K115S[4]	**115 mm**																			

[1] Pilot tolerance: +0/-0.05 mm (+0/-0.002 in.).
[2] Add (p) to the end of the housing designation in the part number to order with pilot using G dimension.
[3] Piloted flange blocks will be quoted (price and delivery) upon request. For optional spigot on flange side, insert the letter P as seen in the following example: QMFP**J***S.
[4] Six-bolt housing.

TAMC AND TAAMC CARTRIDGE BLOCKS

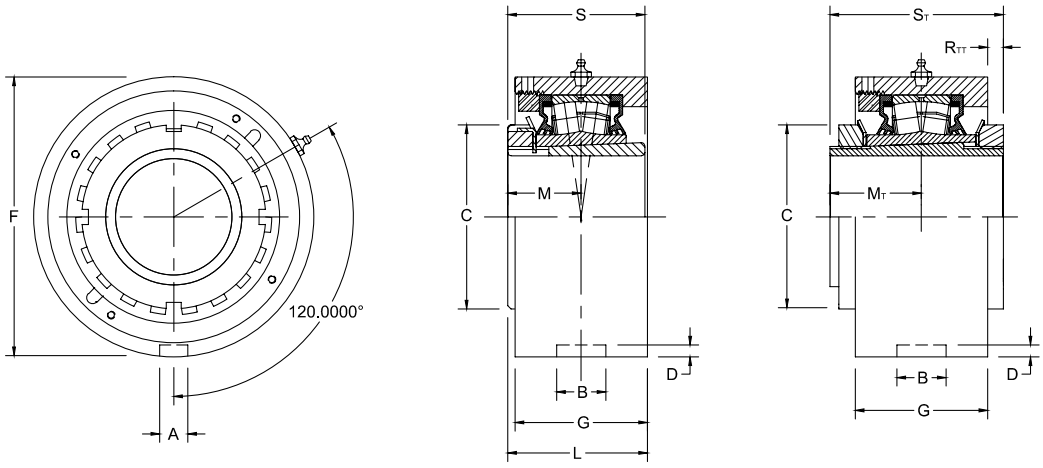

Bearing Part No.	Shaft Dia.	Bearing No.	A	B	C	D	F	G	L FIX	L EXP	M	M_T	R_{TT}	S	S_T	Wt.
	mm in.		**mm** in.	**mm** in.	**mm** in.	**mm** in.	**mm** in.	**mm** in.	**mm** in.	**mm** in.	**mm** in.	**mm** in.	**mm** in.	**mm** in.	**mm** in.	**kg** lbs.
TAMC11K115S TAAMC11K115S	1 15/16 in.	22211	**13.5** 0.530	**23.0** 0.906	**74.9** 2.95	**4.8** 0.188	**115.09 (+0/-0.05)** 4.531 (+0/-0.002)	**55.4** 2.18	**63.2** 2.49	**64.5** 2.54	**35.6** 1.40	**39.1** 1.54	**9.6** 0.38	**58.9** 2.32	**76.33** 3.01	**4.5** 10
TAMC11K200S TAAMC11K200S	2 in.															
TAMC11K050S TAAMC11K050S	**50 mm**															
TAMC13K203S TAAMC13K203S	2 3/16 in.	22213	**13.5** 0.530	**23.0** 0.906	**85.1** 3.35	**4.8** 0.188	**127.00 (+0/-0.05)** 5.000 (+0/-0.002)	**67.1** 2.64	**70.9** 2.79	**72.9** 2.87	**39.6** 1.56	**43.7** 1.72	**7.8** 0.31	**65.0** 2.56	**82.83** 3.26	**5.4** 12
TAMC13K204S TAAMC13K204S	2 1/4 in.															
TAMC13K060S TAAMC13K060S	**60 mm**															
TAMC15K207S TAAMC15K207S	2 7/16 in.	22215	**15.1** 0.594	**26.2** 1.032	**98.0** 3.86	**6.4** 0.250	**149.23 (+0/-0.05)** 5.875 (+0/-0.002)	**70.6** 2.78	**78.2** 3.08	**80.3** 3.16	**43.9** 1.73	**48.7** 1.92	**9.3** 0.37	**72.9** 2.87	**92.33** 3.64	**8.2** 18
TAMC15K208S TAAMC15K208S	2 1/2 in.															
TAMC15K065S TAAMC15K065S	**65 mm**															
TAMC17K215S TAAMC17K215S	2 15/16 in.	22217	**15.1** 0.594	**27.5** 1.083	**110.0** 4.33	**7.1** 0.281	**171.45 (+0/-0.05)** 6.750 (+0/-0.002)	**74.9** 2.95	**87.4** 3.44	**89.4** 3.52	**49.8** 1.96	**50.2** 1.98	**16.5** 0.65	**82.0** 3.23	**104.33** 4.12	**11.8** 26
TAMC17K300S TAAMC17K300S	3 in.															
TAMC17K075S TAAMC17K075S	**75 mm**															
TAMC20K307S TAAMC20K307S	3 7/16 in.	22220	**19.8** 0.781	**32.5** 1.281	**130.0** 5.12	**8.0** 0.313	**206.38 (+0/-0.05)** 8.125 (+0/-0.002)	**85.6** 3.37	**101.3** 3.99	**103.4** 4.07	**58.4** 2.30	**63.6** 2.51	**15.3** 0.60	**97.0** 3.82	**121.83** 4.80	**14.5** 32
TAMC20K308S TAAMC20K308S	3 1/2 in.															
TAMC20K090S TAAMC20K090S	**90 mm**															
TAMC22K315S TAAMC22K315S	3 15/16 in.	22222	**19.8** 0.781	**32.5** 1.281	**145.0** 5.71	**8.0** 0.313	**222.25 (+0/-0.08)** 8.750 (+0/-0.003)	**97.8** 3.85	**112.0** 4.41	**114.0** 4.49	**63.0** 2.48	**65.8** 2.59	**15.9** 0.63	**104.9** 4.13	**130.7** 5.15	**18.1** 40
TAMC22K400S TAAMC22K400S	4 in.															
TAMC22K100S TAAMC22K100S	**100 mm**															
TAMC26K407S TAAMC26K407S	4 7/16 in.	22226	**19.8** 0.780	**38.1** 1.500	**165.1** 6.50	**8.0** 0.313	**265.10 (+0/-0.08)** 10.437 (+0/-0.003)	**104.4** 4.11	**124.2** 4.89	**126.2** 4.97	**71.9** 2.83	**76.6** 3.01	**20.8** 0.82	**120.9** 4.76	**149.65** 5.89	**23.6** 52
TAMC26K408S TAAMC26K408S	4 1/2 in.															
TAMC26K115S TAAMC26K115S	**115 mm**															

TATU AND TAATU TAKE-UP UNITS

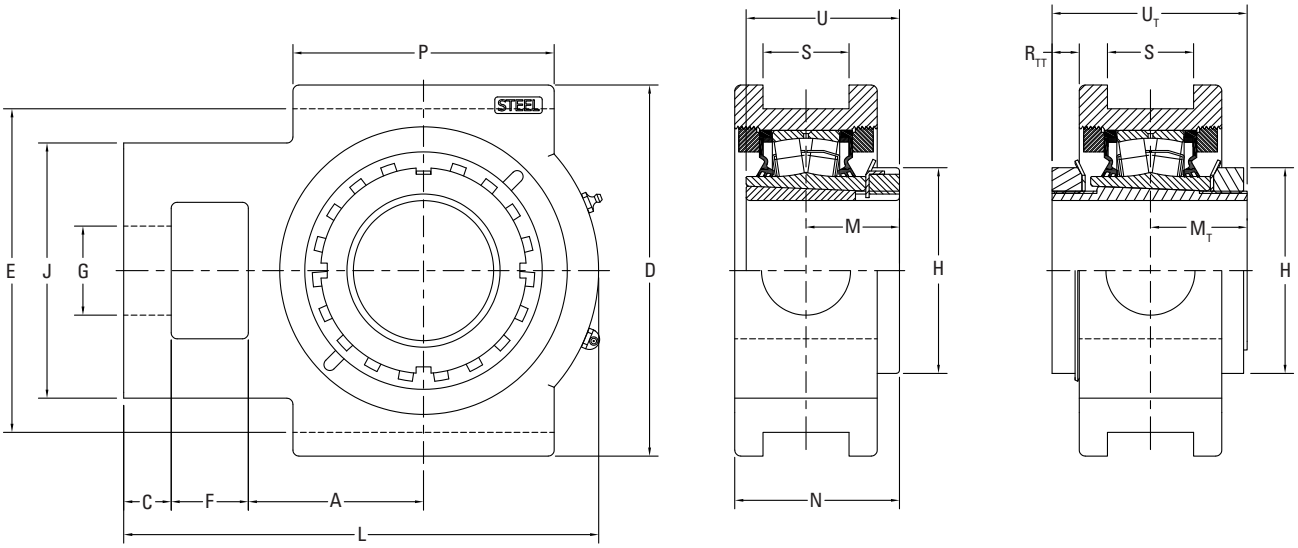

Bearing Part No.	Shaft Dia.	Bearing No.	A	C	D	E	F	G	H	J	L	M	M_T	N	P	R_{TT}	S	U	U_T	Wt.
	mm in.		**mm** in.	**mm** in.	**mm** in.	**mm** in.	**mm** in.	**mm** in.	**mm** in.	**mm** in.	**mm** in.	**mm** in.	**mm** in.	**mm** in.	**mm** in.	**mm** in.	**mm** in.	**mm** in.	**mm** in.	**kg** lbs.
TATU10K111S TAATU10K111S	1 1⁄16 in.	22210	**63.5** 2.5	**22.2** 0.88	**133.4** 5.25	**114.3** 4.5	**31.8** 1.25	**34.9** 1.38	**70.1** 2.76	**98.4** 3.88	**181** 7.13	**33.5** 1.32	**37.6** 1.48	**61** 2.4	**88.9** 3.5	**6.3** 0.25	**20.6** 0.81	**55.1** 2.17	**71.3** 2.81	**6.8** 15.1
TATU10K112S TAATU10K112S	1 ¾ in.																			
TATU10K045S TAATU10K045S	**45 mm**																			
TATU11K115S TAATU11K115S	1 15⁄16 in.	22211	**63.5** 2.5	**22.2** 0.88	**133.4** 5.25	**114.3** 4.5	**31.8** 1.25	**34.9** 1.38	**74.9** 2.95	**98.4** 3.88	**180** 7.13	**35.6** 1.4	**39.1** 1.54	**65.8** 2.59	**95.3** 3.75	**7** 0.27	**20.6** 0.81	**58.9** 2.32	**76.3** 3.01	**7.5** 16.7
TATU11K200S TAATU11K200S	2 in.																			
TATU11K050S TAATU11K050S	**50 mm**																			
TATU13K203S TAATU13K203S	2 3⁄16 in.	22213	**69.9** 2.75	**27.0** 1.06	**149.2** 5.88	**130.2** 5.13	**31.8** 1.25	**34.9** 1.38	**85.1** 3.35	**108.0** 4.25	**198.4** 7.81	**39.6** 1.56	**43.7** 1.72	**73.9** 2.91	**120.7** 4.75	**5.1** 0.20	**27.0** 1.06	**65.0** 2.56	**82.8** 3.26	**10.9** 24.2
TATU13K204S TAATU13K204S	2 ¼ in.																			
TATU13K060S TAATU13K060S	**60 mm**																			
TATU15K207S TAATU15K207S	2 7⁄16 in.	22215	**76.2** 3.00	**25.4** 1.00	**171.5** 6.75	**150.9** 5.94	**39.6** 1.56	**39.6** 1.56	**98.0** 3.86	**108.0** 4.25	**219.7** 8.65	**43.9** 1.73	**48.7** 1.92	**80.9** 3.19	**120.7** 4.75	**9.3** 0.37	**46.0** 1.81	**72.9** 2.87	**92.3** 3.64	**13.2** 29.3
TATU15K208S TAATU15K208S	2 ½ in.																			
TATU15K065S TAATU15K065S	**65 mm**																			
TATU16K211S TAATU16K211S	2 11⁄16 in.	22216	**93.7** 3.69	**25.4** 1.00	**198.4** 7.81	**173.0** 6.81	**41.3** 1.63	**47.6** 1.88	**104.7** 4.12	**136.5** 5.38	**254.0** 10.00	**47.5** 1.87	**51.7** 2.04	**85.6** 3.37	**139.7** 5.50	**9.4** 0.37	**46.0** 1.81	**77.7** 3.06	**99.3** 3.91	**18.9** 41.9
TATU16K212S TAATU16K212S	2 ¾ in.																			
TATU16K070S TAATU16K070S	**70 mm**																			
TATU17K215S TAATU17K215S	2 15⁄16 in.	22217	**93.6** 3.68	**25.4** 1.00	**198.4** 7.81	**173.0** 6.81	**41.3** 1.63	**47.6** 1.88	**110.0** 4.33	**136.5** 5.38	**254.0** 10.00	**49.8** 1.96	**50.2** 1.98	**88.1** 3.47	**139.7** 5.50	**16.0** 0.63	**46.0** 1.81	**82.0** 3.23	**104.3** 4.12	**19.5** 43.3
TATU17K300S TAATU17K300S	3 in.																			
TATU17K075S TAATU17K075S	**75 mm**																			
TATU18K080S TAATU18K080S	**80 mm**	22218	**112.7** 4.44	**28.6** 1.13	**239.7** 9.44	**219.1** 8.63	**54.0** 2.13	**54.0** 2.13	**119.6** 4.71	**136.5** 5.38	**308.0** 12.13	**52.0** 2.05	**56.6** 2.23	**91.9** 3.62	**158.8** 6.25	**12.3** 0.49	**52.4** 2.06	**86.0** 3.39	**108.8** 4.28	**27.3** 60.67
TATU18K303S TAATU18K303S	3 3⁄16 in.																			
TATU18K304S TAATU18K304S	3 ¼ in.																			

Continued on next page.

TATU AND TAATU TAKE-UP UNITS – *continued*

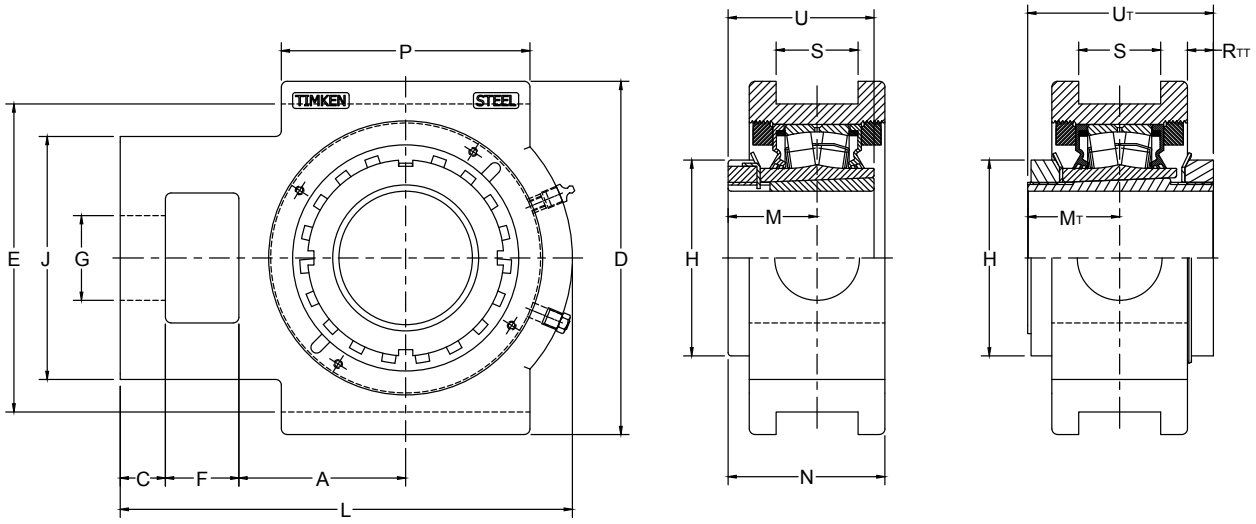

Continued from previous page.

Bearing Part No.	Shaft Dia.	Bearing No.	A	C	D	E	F	G	H	J	L	M	M_T	N	P	R_{TT}	S	U	U_T	Wt.
	mm in.		**mm** in.	**mm** in.	**mm** in.	**mm** in.	**mm** in.	**mm** in.	**mm** in.	**mm** in.	**mm** in.	**mm** in.	**mm** in.	**mm** in.	**mm** in.	**mm** in.	**mm** in.	**mm** in.	**mm** in.	**kg** lbs.
TATU20K307S TAATU20K307S	3 7⁄16 in.	22220	**104.9** 4.13	**28.7** 1.13	**239.8** 9.44	**219.2** 8.63	**54.1** 2.13	**52.3** 2.06	**130.0** 5.12	**143.0** 5.63	**296.9** 11.69	**58.4** 2.30	**63.6** 2.51	**105.2** 4.14	**177.8** 7.00	**11.9** 0.47	**52.3** 2.06	**97.0** 3.82	**121.8** 4.80	**23.1** 51.4
TATU20K308S TAATU20K308S	3 ½ in.																			
TATU20K090S TAATU20K090S	**90 mm**																			
TAATU22K311S	3 11⁄16 in.	22222	**128.5** 5.06	**38.1** 1.50	**263.7** 10.38	**241.3** 9.50	**54.1** 2.13	**54.1** 2.13	**145.0** 5.71	**162.1** 6.38	**341.3** 13.44	**63.0** 2.48	**65.8** 2.59	**113.1** 4.45	**200.0** 7.87	**15.2** 0.60	**52.3** 2.06	**104.9** 4.13	**130.7** 5.15	**37.6** 83.6
TATU22K315S TAATU22K315S	3 15⁄16 in.																			
TATU22K400S TAATU22K400S	4 in.																			
TATU22K100S TAATU22K100S	**100 mm**																			
TATU24K403S TAATU24K403S	4 3⁄16 in.	22224	**138.1** 5.44	**38.1** 1.50	**285.8** 11.25	**260.4** 10.25	**63.5** 2.50	**60.3** 2.38	**154.5** 6.08	**158.8** 6.25	**377.8** 14.88	**67.0** 2.64	**71.6** 2.82	**116.1** 4.57	**203.2** 8.00	**18.7** 0.73	**52.4** 2.06	**112.0** 4.41	**139.2** 5.48	**56.4** 125.3
TATU24K404S TAATU24K404S	4 ¼ in.																			
TATU24K110S TAATU24K110S	**110 mm**																			
TATU26K407S TAATU26K407S	4 7⁄16 in.	22226	**134.9** 5.31	**63.5** 2.50	**285.8** 11.25	**260.4** 10.25	**63.5** 2.50	**60.5** 2.38	**165.1** 6.50	**177.8** 7.00	**396.7** 15.62	**71.9** 2.83	**76.6** 3.01	**128.3** 5.05	**228.6** 9.00	**16.8** 0.66	**52.3** 2.06	**120.9** 4.76	**149.7** 5.89	**59.0** 131.2
TATU26K408S TAATU26K408S	4 ½ in.																			
TATU26K115S TAATU26K115S	**115 mm**																			
TATU28K415S TAATU28K415S	4 15⁄16 in.	22226	**182.6** 7.19	**44.5** 1.75	**406.4** 16.00	**358.8** 14.13	**88.9** 3.50	**79.4** 3.13	**180.1** 7.09	**203.2** 8.00	**482.6** 19.00	**77.5** 3.05	**85.2** 3.35	**131.6** 5.18	**254.0** 10.00	**22.0** 0.86	**65.1** 2.56	**131.1** 5.16	**161.2** 6.34	**99.8** 220.0
TATU28K500S TAATU28K500S	5 in.																			
TATU28K125S TAATU28K125S	**125 mm**																			
TAATU32K140S	**140 mm**	23132[1]	**195.3** 7.69	**44.5** 1.75	**406.4** 16.00	**358.8** 14.13	**88.9** 3.50	**79.4** 3.13	**210.0** 8.27	**203.2** 8.00	**523.9** 20.63	–	**90.5** 3.56	**173.0** 6.81	**273.1** 10.75	**11.9** 0.47	**65.1** 2.56	–	**185.0** 7.28	**151.5** 336.7
TAATU32K506S	5 ⅜ in.																			
TAATU32K507S	5 7⁄16 in.																			
TAATU32K508S	5 ½ in.																			
TAATU34K150S	**150 mm**	23134[1]	**182.6** 7.19	**57.2** 2.25	**406.4** 16.00	**358.8** 14.13	**88.9** 3.50	**79.4** 3.13	**220.0** 8.66	**203.2** 8.00	**501.7** 19.75	–	**94.7** 3.73	**170.9** 6.73	**264.4** 10.41	**19.6** 0.77	**65.1** 2.56	–	**187.5** 7.38	**134.3** 296.0
TAATU34K513S	5 13⁄16 in.																			
TAATU34K514S	5 ⅞ in.																			
TAATU34K515S	5 15⁄16 in.																			
TAATU34K600S	6 in.																			
TAATU36K160S	**160 mm**	23136[1]	**195.3** 7.69	**44.5** 1.75	**406.4** 16.00	**358.8** 14.13	**88.9** 3.50	**79.4** 3.13	**230.0** 9.06	**203.2** 8.00	**523.9** 20.63	–	**99.0** 3.90	**181.6** 7.15	**285.8** 11.25	**15.0** 0.59	**65.1** 2.56	–	**196.6** 7.74	**174.3** 387.4
TAATU36K605S	6 5⁄16 in.																			
TAATU36K606S	6 ⅜ in.																			
TAATU36K607S	6 7⁄16 in.																			
TAATU36K608S	6 ½ in.																			

[1] Insert size 23132K and above come standard with double nut tapered adapter.

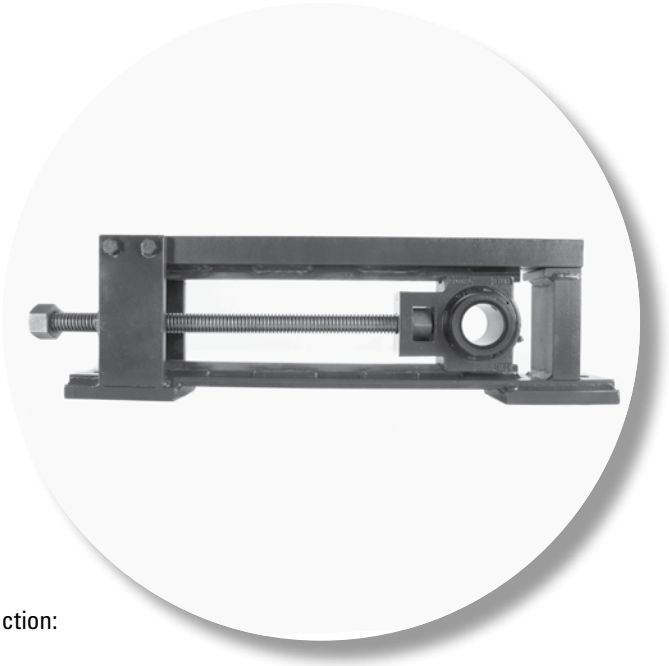

TAKE-UP FRAMES

The following topics are covered within this section:

QMTF Take-Up Frames 258
QMT Pillow Block Take-Up Frames 259
QMTPF Top Angle Take-Up Frames 260
THD Heavy Duty Take-Up Frames 261

QMTF TAKE-UP FRAMES[1]

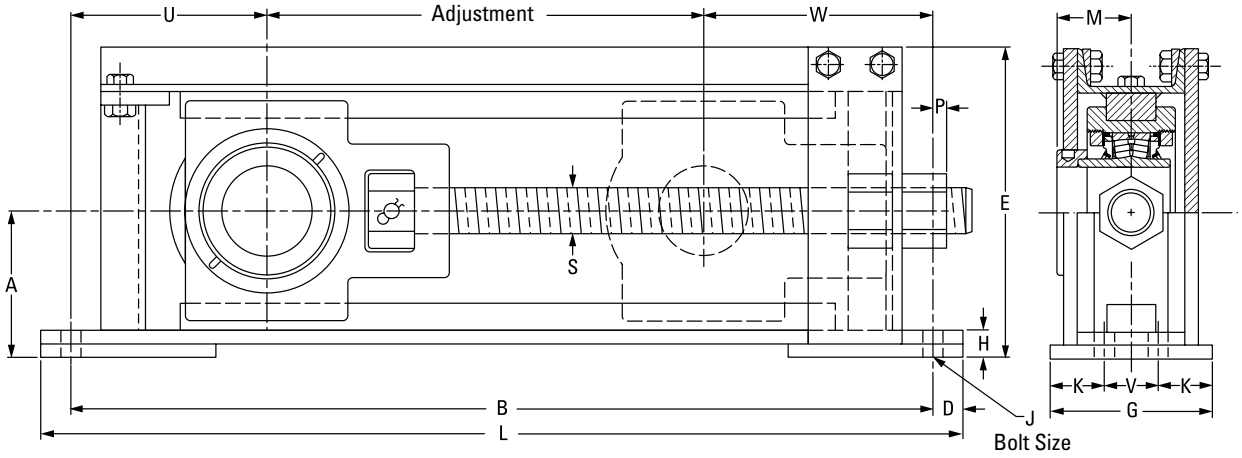

Frame Part No.	Travel Nom.	Travel Adj.	A	B	D	E	G	H	J	K	L	M	P	S	U	V	W	No. of Bolts Req.	Wt.
		mm in.	**mm** in.	**mm** in.	**mm** in.	**mm** in.	**mm** in.	**mm** in.	**mm** in.	**mm** in.	**mm** in.	**mm** in.	**mm** in.		**mm** in.	**mm** in.	**mm** in.		**kg** lbs.
QMTF12-115	12	**419.1** 16.50	**100.1** 3.94	**698.5** 27.50	**25.4** 1.00	**210.3** 8.28	**101.6** 4.00	**31.8** 1.25	**16** ⅝	–	**749.3** 29.50	**47.8** 1.88	**31.8** 1.25	**1-5** ACME	**136.7** 5.38	–	**143.0** 5.63	2	**27.2** 60
QMTF12-203	12	**431.8** 17.00	**106.4** 4.19	**698.5** 27.50	**25.4** 1.00	**220.0** 8.66	**101.6** 4.00	**35.1** 1.38	**16** ⅝	–	**749.3** 29.50	**50.8** 2.00	**41.4** 1.63	**1.125-5** ACME	**115.8** 4.56	–	**150.9** 5.94	2	**29.5** 65
QMTF12-207	12	**421.6** 16.60	**111.3** 4.38	**723.9** 28.50	**25.4** 1.00	**233.4** 9.19	**101.6** 4.00	**28.7** 1.13	**20** ¾	–	**774.7** 30.50	**54.1** 2.13	**44.5** 1.75	**1.25-5** ACME	**134.9** 5.31	–	**166.6** 6.56	2	**32.2** 71
QMTF12-215	12	**393.7** 15.50	**129.3** 5.09	**774.7** 30.50	**25.4** 1.00	**272.8** 10.74	**127.0** 5.00	**28.7** 1.13	**16** ⅝	**38.1** 1.50	**825.5** 32.50	**60.5** 2.38	**12.7** 0.50	**1.5-4** ACME	**165.1** 6.50	**50.8** 2.00	**215.9** 8.50	4	**49.4** 109
QMTF12-307	12	**393.7** 15.50	**143.0** 5.63	**812.8** 32.00	**28.7** 1.13	**295.4** 11.63	**127.0** 5.00	**26.2** 1.03	**20** ¾	**38.1** 1.50	**870.0** 34.25	**65.5** 2.58	**25.4** 1.00	**1.75-4** ACME	**185.7** 7.31	**50.8** 2.00	**233.4** 9.19	4	**62.6** 138
QMTF12-315	12	**457.2** 18.00	**177.8** 7.00	**914.4** 36.00	**31.8** 1.25	**367.5** 14.47	**152.4** 6.00	**36.6** 1.44	**20** ¾	**44.5** 1.75	**977.9** 38.50	**75.2** 2.96	**41.4** 1.63	**2-4** ACME	**190.5** 7.50	**63.5** 2.50	**265.2** 10.44	4	**86.6** 191
QMTF18-207	18	**574.0** 22.60	**111.3** 4.38	**876.3** 34.50	**25.4** 1.00	**234.2** 9.22	**101.6** 4.00	**26.9** 1.06	**20** ¾	–	**927.1** 36.50	**54.1** 2.13	**44.5** 1.75	**1.25-5** ACME	**139.7** 5.50	–	**162.6** 6.40	2	**36.7** 81
QMTF18-215	18	**546.1** 21.50	**129.3** 5.09	**927.1** 36.50	**25.4** 1.00	**272.8** 10.74	**127.0** 5.00	**28.7** 1.13	**16** ⅝	**38.1** 1.50	**977.9** 38.50	**60.5** 2.38	**12.7** 0.50	**1.5-4** ACME	**165.1** 6.50	**50.8** 2.00	**215.9** 8.50	4	**54.4** 120
QMTF18-307	18	**546.1** 21.50	**143.0** 5.63	**965.2** 38.00	**28.7** 1.13	**295.4** 11.63	**127.0** 5.00	**26.2** 1.03	**20** ¾	**38.1** 1.50	**1022.4** 40.25	**65.5** 2.58	**25.4** 1.00	**1.75-4** ACME	**185.7** 7.31	**50.8** 2.00	**233.4** 9.19	4	**70.8** 156
QMTF18-315	18	**609.6** 24.00	**177.8** 7.00	**1066.8** 42.00	**31.8** 1.25	**366.8** 14.44	**152.4** 6.00	**36.6** 1.44	**20** ¾	**44.5** 1.75	**1130.3** 44.50	**75.2** 2.96	**41.4** 1.63	**2-4** ACME	**190.5** 7.50	**63.5** 2.50	**265.2** 10.44	4	**101.2** 223
QMTF24-207	24	**726.4** 28.60	**111.3** 4.38	**1028.7** 40.50	**25.4** 1.00	**233.4** 9.19	**101.6** 4.00	**28.7** 1.13	**20** ¾	–	**1079.5** 42.50	**54.1** 2.13	**44.5** 1.75	**1.25-5** ACME	**115.8** 4.56	–	**166.6** 6.56	2	**41.3** 91
QMTF24-215	24	**698.5** 27.50	**129.3** 5.09	**1079.5** 42.50	**25.4** 1.00	**271.5** 10.69	**127.0** 5.00	**24.6** 0.97	**16** ¾	**38.1** 1.50	**1130.3** 44.50	**60.5** 2.38	**12.7** 0.50	**1.5-4** ACME	**165.1** 6.50	**50.8** 2.00	**215.9** 8.50	4	**64.0** 141
QMTF24-307	24	**698.5** 27.50	**143.0** 5.63	**1117.6** 44.00	**28.7** 1.13	**295.4** 11.63	**127.0** 5.00	**26.2** 1.03	**20** ¾	**38.1** 1.50	**1174.8** 46.25	**65.5** 2.58	**25.4** 1.00	**1.75-4** ACME	**185.7** 7.31	**50.8** 2.00	**233.4** 9.19	4	**81.2** 179
QMTF24-315	24	**762.0** 30.00	**177.8** 7.00	**1219.2** 48.00	**31.8** 1.25	**367.5** 14.47	**152.4** 6.00	**36.6** 1.44	**20** ¾	**44.5** 1.75	**1282.7** 50.50	**75.2** 2.96	**41.4** 1.63	**2-4** ACME	**190.5** 7.50	**63.5** 2.50	**265.2** 10.44	4	**112.9** 249

[1]Frame only. Bearing unit must be ordered separately. See pages 136 (V-Lock), 174-175 (CL) and 205 (EC) for information on take-up bearing units.
NOTE: Take-up frames come with NC threaded rod.

QMT PILLOW BLOCK TAKE-UP FRAMES(1)

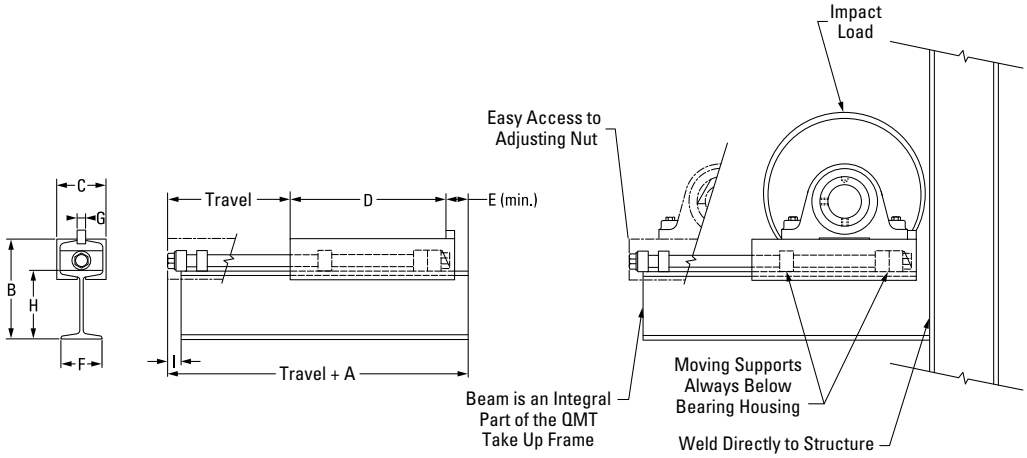

Frame Part No.	Bearing Size	Travel	A	B	C	D	E	F	G	H	I	Wt.
			mm in.	**mm** in.	**mm** in.	**mm** in.	**mm** in.	**mm** in.	**mm** in.	**mm** in.	**mm** in.	**kg** lbs.
QMT1 X 9	1 7⁄16 in. – 2 15⁄16 in.	9	**330.2** 13.0	**187.3** 7.375	**92.1** 3.625	**289.1** 11.38	**41.4** 1.63	**76.2** 3.00	**20** ¾	**127.0** 5.0	**25.4** 1.0	**11.8** 26
QMT1 X 12	1 7⁄16 in. – 2 15⁄16 in.	12	**330.2** 13.0	**187.3** 7.375	**92.1** 3.625	**289.1** 11.38	**41.4** 1.63	**76.2** 3.00	**20** ¾	**127.0** 5.0	**25.4** 1.0	**13.6** 30
QMT1 X 18	1 7⁄16 in. – 2 15⁄16 in.	18	**330.2** 13.0	**187.3** 7.375	**92.1** 3.625	**289.1** 11.38	**41.4** 1.63	**76.2** 3.00	**20** ¾	**127.0** 5.0	**25.4** 1.0	**16.3** 36
QMT1 X 24	1 7⁄16 in. – 2 15⁄16 in.	24	**330.2** 13.0	**187.3** 7.375	**92.1** 3.625	**289.1** 11.38	**41.4** 1.63	**76.2** 3.00	**20** ¾	**127.0** 5.0	**25.4** 1.0	**19.1** 42
QMT2 X 18	2 15⁄16 in. – 4 7⁄16 in.	18	**482.6** 19.0	**311.2** 12.25	**125.4** 4.938	**431.8** 17.00	**50.8** 2.00	**106.4** 4.19	**24** 1	**203.2** 8.0	**38.1** 1.5	**33.6** 74
QMT2 X 24	2 15⁄16 in. – 4 7⁄16 in.	24	**482.6** 19.0	**311.2** 12.25	**125.4** 4.938	**431.8** 17.00	**50.8** 2.00	**106.4** 4.19	**24** 1	**203.2** 8.0	**38.1** 1.5	**40.8** 90
QMT2 X 36	2 15⁄16 in. – 4 7⁄16 in.	36	**482.6** 19.0	**311.2** 12.25	**125.4** 4.938	**431.8** 17.00	**50.8** 2.00	**106.4** 4.19	**24** 1	**203.2** 8.0	**38.1** 1.5	**43.6** 96

(1)Frame only. Bearing unit must be ordered separately.

QMTPF TOP ANGLE TAKE-UP FRAMES[1]

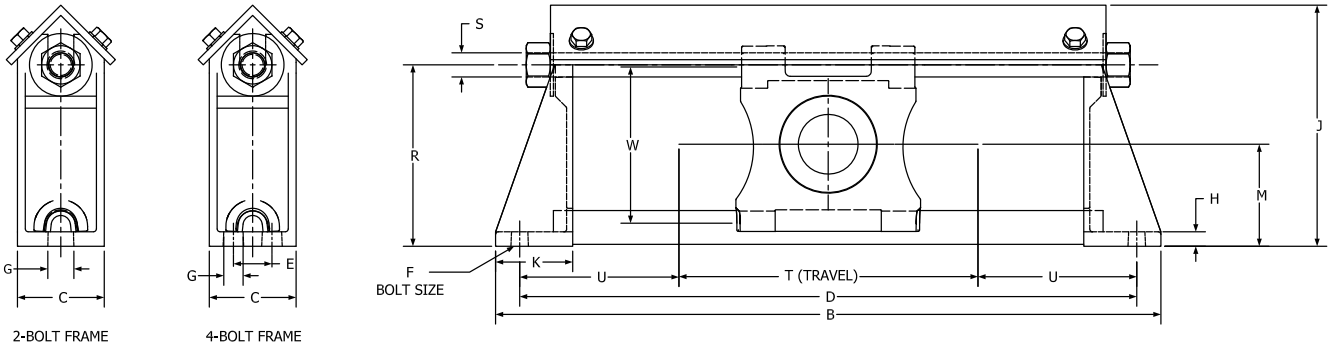

Bearing Part No.	SRB Shaft Size	Nominal "T"	B	C	D	F	E	G	H	J	K	M	R	S	T	U	W	Wt.
		mm in.	**mm** in.	**mm** in.	**mm** in.	**mm** in.	**mm** in.	**mm** in.	**mm** in.	**mm** in.	**mm** in.	**mm** in.	**mm** in.	**mm** in.	**mm** in.	**mm** in.	**mm** in.	**kg** lbs.
QMTPF12-115	1 15⁄16 in. 2 in. **50 mm**	**304.8** 12	**723.9** 28.50	**88.9** 3.50	**673.1** 26.50	**M16** ⅝	-	**25.4** 1.00	**19.0** 0.75	**215.9** 8.50	**76.2** 3.00	**100.0** 3.94	**161.1** 6.34	**¾-10** UNC	**368.3** 14.50	**152.4** 6.00	**131.0** 5.16	**14.52** 32
QMTPF18-115		**457.2** 48	**876.3** 34.50		**825.5** 32.50										**520.7** 20.50			**16.32** 36
QMTPF24-115		**609.6** 24	**1028.7** 40.50		**977.9** 38.50										**673.1** 26.50			**18.59** 41
QMTPF12-203E	-	**304.8** 12	**749.3** 29.50	**88.9** 3.50	**698.5** 27.50	**M16** ⅝	-	**25.4** 1.00	**19.1** 0.75	**231.8** 9.13	**76.2** 3.00	**106.4** 4.19	**177.0** 6.97	**¾-10** UNC	**381.0** 15.00	**158.8** 6.25	**146.8** 5.78	**15.52** 34
QMTPF18-203E		**457.2** 48	**901.7** 35.50		**850.9** 33.50										**533.4** 21.00			**17.69** 39
QMTPF24-203E		**609.6** 24	**1054.1** 41.50		**1003.3** 39.50										**685.8** 27.00			**19.5** 43
QMTPF12-203/207E	2 3⁄16 in. 2 ¼ in. **55 mm**	**304.8** 12	**774.7** 30.50	**101.6** 4.00	**723.9** 28.50	**M20** ¾	-	**33.3** 1.31	**19.1** 0.75	**257.2** 10.13	**88.9** 3.50	**111.1** 4.38	**187.3** 7.38	**1-8** UNC	**368.3** 14.50	**177.8** 7.00	**157.2** 6.19	**21.32** 47
QMTPF18-203/207E		**457.2** 48	**927.1** 36.50		**876.3** 34.50										**520.7** 20.50			**24.49** 54
QMTPF24-203/207E		**609.6** 24	**1079.5** 42.50		**1028.7** 40.50										**673.1** 26.50			**27.21** 60
QMTPF12-207/215	2 7⁄16 in. 2 ½ in. 2 11⁄16 in. 2 ¾ in. 2 15⁄16 in. 3 in **60 mm 65 mm 70 mm 75 mm**	**304.8** 12	**825.5** 32.50	**114.3** 4.50	**774.7** 30.50	**M16** ⅝	**50.8** 2	**25.4** 1.00	**19.1** 0.75	**281.0** 11.06	**88.9** 3.50	**125.4** 4.94	**212.7** 8.38	**1-8** UNC	**393.7** 15.50	**190.5** 7.50	**182.6** 7.19	**23.6** 52
QMTPF18-207/215		**457.2** 48	**977.9** 38.50		**927.1** 36.50										**546.1** 21.50			**27.2** 60
QMTPF24-207/215		**609.6** 24	**1130.3** 44.50		**1079.5** 42.50										**698.5** 27.50			**29.9** 66
QMTPF12-307	3 3⁄16 in. 3 ¼ in. 3 7⁄16 in. 2 ½ in. **80 mm 85 mm 90 mm**	**304.8** 12	**876.3** 34.50	**114.3** 4.50	**812.8** 32.00	**M20** ¾	**50.8** 2	**25.4** 1.00	**19.1** 0.75	**317.5** 12.50	**101.6** 4.00	**138.1** 5.44	**239.0** 8.38	**1 ¼-7** UNC	**381.0** 15.00	**215.9** 8.50	**208.8** 8.22	**28.6** 63
QMTPF18-307		**457.2** 48	**1028.7** 40.50		**965.2** 68.00										**533.4** 21.00			**31.7** 70
QMTPF24-307		**609.6** 24	**1181.1** 46.50		**1117.6** 44.00										**685.8** 27.00			**35.8** 79
QMTPF12-315	3 11⁄16 in. 3 ¾ in. 3 15⁄16 in. 4 in. **100 mm**	**304.8** 12	**977.9** 38.50	**139.7 5.50**	**914.4** 36.00	**M20** ¾	**63.5** 2.5	**25.4** 1.00	**19.1** 0.75	**362.0** 14.25	**114.3** 4.50	**177.8** 7.00	**288.0** 11.34	**1 ¼-7** UNC	**419.1** 16.50	**244.5** 9.63	**226.2** 8.91	**38.1** 84
QMTPF18-315		**457.2** 48	**1130.0** 44.50		**1066.8** 42.00										**571.5** 22.50			**41.7** 92
QMTPF24-315		**609.6** 24	**1282.7** 50.50		**1219.2** 48.00										**723.9** 28.50			**46.3** 102

[1]Frame only. Bearing unit must be ordered separately. See pages 176-177 (CL) and 206 (EC) for information on take-up bearing units.

THD HEAVY DUTY TAKE-UP FRAMES

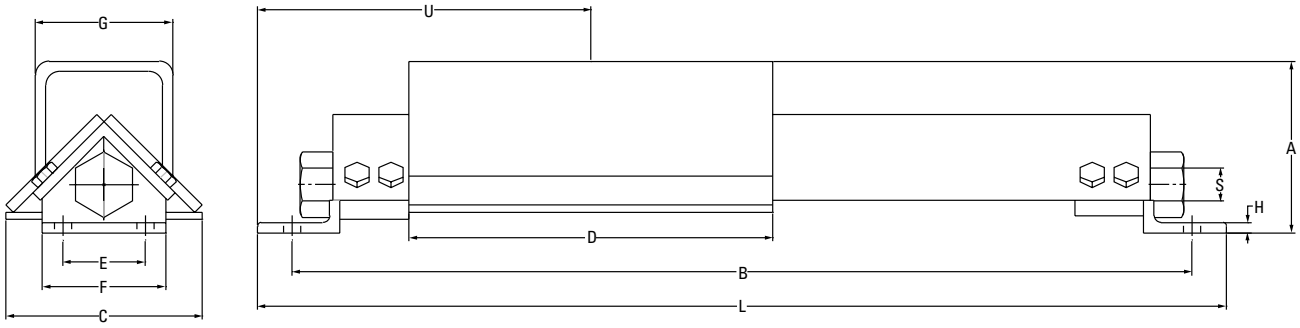

Frame Part No.	Travel Nom.	A	B	C	D	E	F	G	H	J	L	S	U	Wt.
		mm in.	**mm** in.	**mm** in.	**mm** in.	**mm** in.	**mm** in.	**mm** in.	**mm** in.	**mm** in.	**mm** in.		**mm** in.	**kg** lbs.
THD200X12	12		**736.6** 29.00								**769.9** 30.31			**21.8** 48.0
THD200X18	18	**133.4**	**889.0** 35.00	**127.0**	**279.4**	**63.5**	**127.0**	**101.6**	**6.4**	**M16**	**896.9** 35.31	**1-5**	**247.7**	**23.6** 52.0
THD200X24	24	5.25	**1041.4** 41.00	5.00	11.00	2.50	5.00	4.00	0.25	⅝	**1074.7** 42.31	ACME	9.75	**25.4** 56.0
THD200X36	36		**1346.2** 53.00								**1379.5** 54.31			**29.0** 64.0
THD208X12	12		**831.9** 32.75								**895.4** 35.25			**37.6** 83.0
THD208X18	18	**158.8**	**984.3** 38.75	**139.7**	**336.6**	**76.2**	**139.7**	**127.0**	**9.5**	**M16**	**1073.2** 41.25	**1-5**	**276.2**	**40.4** 89.0
THD208X24	24	6.25	**1136.7** 44.75	5.50	13.25	3.00	5.50	5.00	0.38	⅝	**1200.2** 47.25	ACME	10.88	**43.0** 95.0
THD208X36	36		**1441.5** 56.75								**1505.0** 59.25			**48.5** 107.0
THD300X12	12		**901.7** 35.50								**971.6** 38.25			**62.1** 137.0
THD300X18	18	**177.8**	**1054.1** 41.50	**165.1**	**362.0**	**76.2**	**165.1**	**152.4**	**12.7**	**M20**	**1124.0** 44.25	**1.25-5**	**298.5**	**66.7** 147.0
THD300X24	24	7.00	**1206.5** 47.50	6.50	14.25	3.00	6.50	6.00	0.50	¾	**1276.4** 50.25	ACME	11.75	**71.2** 157.0
THD300X36	36		**1511.3** 59.50								**1581.2** 62.25			**79.8** 176.0
THD308X12	12		**946.2** 37.25								**1016.0** 40.00			**66.7** 147.0
THD308X18	18	**177.8**	**1098.6** 43.25	**165.1**	**406.4**	**76.2**	**165.1**	**152.4**	**12.7**	**M20**	**1168.4** 46.00	**1.25-5**	**320.7**	**71.2** 157.0
THD308X24	24	7.00	**1251.0** 49.25	6.50	16.00	3.00	6.50	6.00	0.50	¾	**1320.8** 52.00	ACME	12.63	**75.7** 167.0
THD308X36	36		**1555.8** 61.25								**1625.6** 64.00			**84.8** 187.0
THD400X12	12		**1047.8** 41.25								**1117.6** 44.00			**79.8** 176.0
THD400X18	18	**177.8**	**1200.2** 47.25	**165.1**	**508.0**	**76.2**	**165.1**	**177.8**	**12.7**	**M20**	**1270.0** 50.00	**1.25-5**	**396.9**	**84.4** 186.0
THD400X24	24	7.00	**1352.6** 53.25	6.50	20.00	3.00	6.50	7.00	0.50	¾	**1422.4** 56.00	ACME	15.63	**88.9** 196.0
THD400X36	36		**1682.8** 66.25								**1727.2** 68.00			**98.0** 216.0

Continued on next page.

THD HEAVY DUTY TAKE-UP FRAMES – *continued*

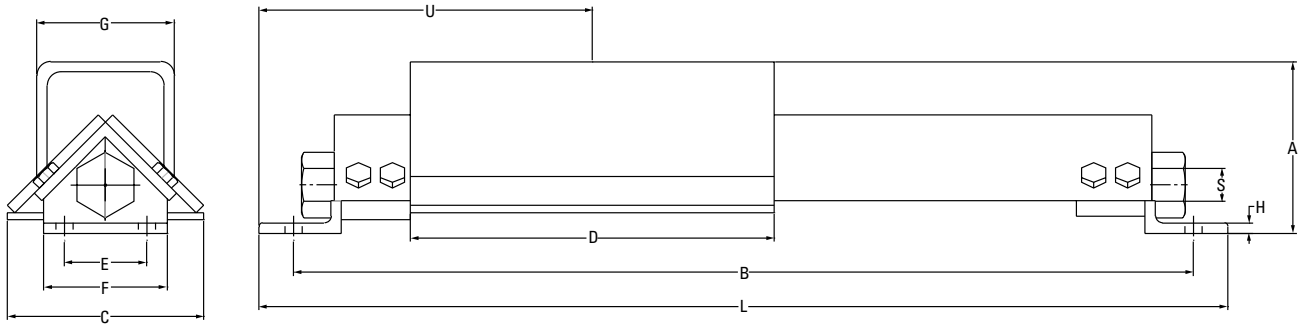

Continued from previous page.

Frame Part No.	Travel Nom.	A	B	C	D	E	F	G	H	J	L	S	U	Wt.
		mm in.	**mm** in.	**mm** in.	**mm** in.	**mm** in.	**mm** in.	**mm** in.	**mm** in.	**mm** in.	**mm** in.		**mm** in.	**kg** lbs.
THD500X12	12		**1193.8** 47.00								**1257.3** 49.50			**137.9** 304.0
THD500X18	18	**196.9**	**1346.2** 53.00	**177.8**	**596.9**	**101.6**	**177.8**	**215.9**	**12.7**	**M24**	**1409.7** 55.50	**1.5-4**	**419.1**	**146.6** 321.0
THD500X24	24	7.75	**1498.6** 59.00	7.00	23.50	4.00	7.00	8.50	0.50	⅞	**1562.1** 61.50	ACME	16.50	**152.9** 337.0
THD500X36	36		**1803.4** 71.00								**1866.9** 73.50			**168.3** 371.0
THD600X12	12		**1378.0** 54.25								**1466.9** 57.75			**227.7** 502.0
THD600X18	18	**260.4**	**1530.4** 60.25	**254.0**	**654.1**	**152.4**	**254.0**	**254.0**	**19.1**	**M24**	**1619.3** 63.75	**2-4**	**525.1**	**237.7** 524.0
THD600X24	24	10.25	**1682.8** 66.25	10.00	25.75	6.00	10.00	10.00	0.75	1	**1771.7** 69.75	ACME	20.68	**247.7** 546.0
THD600X36	36		**1987.6** 78.25								**2076.5** 81.75			**267.6** 590.0
THD800X12	12		**1546.2** 60.88								**1800.2** 70.88			**362.4** 799.0
THD800X18	18	**323.9**	**1698.6** 66.88	**304.8**	**914.4**	**152.4**	**304.8**	**304.8**	**19.1**	**M30**	**1952.6** 76.88	**2.5-3**	**539.8**	**372.9** 822.0
THD800X24	24	12.75	**1851.0** 72.88	12.00	36.00	6.00	12.00	12.00	0.75	1¼	**2105.0** 82.88	ACME	21.25	**382.8** 844.0
THD800X36	36		**2155.8** 84.88								**2409.8** 94.88			**403.2** 889.0
THD1000X12	12		**1689.1** 66.50								**1934.1** 76.50			**540.7** 1192.0
THD1000X18	18	**393.7**	**1841.5** 72.50	**355.6**	**1016.0**	**152.4**	**355.6**	**355.6**	**19.1**	**M38**	**2095.5** 82.50	**3-2**	**590.6**	**559.3** 1233.0
THD1000X24	24	15.50	**1993.9** 78.50	14.00	40.00	6.00	14.00	14.00	0.75	1½	**2247.9** 88.50	ACME	23.25	**577.9** 1274.0
THD1000X36	36		**2298.7** 90.50								**2552.7** 100.50			**615.5** 1357.0

INDEX

SOLID-BLOCK MOUNTED SPHERICAL ROLLER BEARINGS

Bearing Loads 34
CL Series (concentric [set screw] lock) 138
DVC and DAAC Piloted Flange Cartridges 243
DVF and DAAF Square Flange Blocks 250
DVFBB Bracket Flange Blocks 252
DVP and DAAP Two-Bolt Pillow Blocks 213
DVPF and DAAPF Four-Bolt Pillow Blocks 221
EC Series (eccentric lock) 182
Engineering 9
Installation Guides 68
Internal Radial Clearances 63
Locking Styles 15
Lubrication 67
Misalignment 67
Nomenclature 10
Normal Speed Ratings for Seals 57
QAAFX 5000 Series Flange Blocks 170
QAAPX 5000 Series Four-Bolt Pillow Blocks 154
QAAPXT 5000 Series Two-Bolt Pillow Blocks 149
QAC and QAAC Piloted Flange Cartridges 155
QACMD and QAACMD Piloted Flange Cartridges 157
QACW and QAACW Piloted Flange Cartridges 159
QAF and QAAF Square Flange Blocks 161
QAFBB Bracket Flange Blocks 169
QAFE and QAAFE Square Flange Blocks 163
QAFL and QAAFL Square Flange Blocks 165
QAFMD and QAAFMD Square Flange Blocks 167
QAFY and QAAFY Round Flange Blocks 171
QAMC and QAAMC Cartridge Blocks 173
QAMH and QAAMH Hanger Blocks 179
QAP and QAAP Two-Bolt Pillow Blocks 139
QAPF and QAAPF Four-Bolt Pillow Blocks 150
QAPL and QAAPL Two-Bolt Pillow Blocks 143
QAPMD and QAAPMD Two-Bolt Pillow Blocks 145
QAPR and QAAPR Four-Bolt Pillow Blocks 152
QASN and QAASN SN-Style Two-Bolt Pillow Blocks –
Pure Metric Design 147
QATP and QAATP Top Angle Take-Up Blocks 177
QATU and QAATU Take-Up Blocks 175
QMC Piloted Flange Cartridges 194
QMCMD Piloted Flange Cartridges 195
QMCW Piloted Flange Cartridges 196
QMF Four-Bolt Square Flange Blocks 198
QMFBB Bracket Flange Blocks 201
QMFL Four-Bolt Square Flange Blocks 199
QMFMD Four-Bolt Square Flange Blocks 200
QMFX 5000 Series Square Flange Blocks 204
QMFY Round Flange Blocks 202
QMMC Cartridge Blocks 206
QMMH Hanger Blocks 210
QMP Two-Bolt Pillow Blocks 183
QMPF Four-Bolt Pillow Blocks 186
QMPH and QMPG Four-Bolt Pillow Blocks 188
QMPL Two-Bolt Pillow Blocks 184
QMPMD Two-Bolt Pillow Blocks 185
QMPR Four-Bolt Pillow Blocks 187
QMPX 5000 Series Four-Bolt Pillow Blocks 189
QMPXT 5000 Series Two-Bolt Pillow Blocks 191
QMSN SN-Style Two-Bolt Pillow Blocks –
Pure Metric Design 192
QMT Pillow Block Take-Up Frames 259
QMTF Take-Up Frames 258
QMTP Top Angle Take-Up Blocks 209
QMTPF Top Angle Take-Up Frames 260
QMTU Take-Up Blocks 208
QVC and QVVC Piloted Flange Cartridges –
Straight Bore Equivalent 130
QVCW and QVVCW Piloted Flange Cartridges –
Straight Bore Equivalent 132
QVF and QVVF Square Flange Blocks –
Straight Bore Equivalent 115
QVFB and QVVFB Square Flange Blocks –
Tapered Adapter Equivalent 117
QVFC and QVVFC Piloted Flange Cartridges –
Tapered Adapter Equivalent 119
QVFK and QVVFK 9000 Series Square Flange Blocks –
Tapered Adapter Equivalent 125

QVFL and QVVFL Flange Blocks –
Straight Bore Equivalent. 121
QVFNL Series Flange Blocks –
Tapered Adapter Equivalent. 127
QVFX and QVVFX 5000 Series Square Flange Blocks –
Straight Bore Equivalent. 123
QVFY and QVVFY Round Flange Blocks –
Straight Bore Equivalent. 128
QVMC and QVVMC Cartridge Blocks –
Tapered Adapter Equivalent. 134
QVP and QVVP Two-Bolt Pillow Blocks –
Straight Bore Equivalent. 92
QVPA and QVVPA SAF Two-Bolt Pillow Blocks –
Tapered Adapter Equivalent. 96
QVPF and QVVPF Four-Bolt Pillow Blocks –
Straight Bore Equivalent. 104
QVPG and QVVPG SN-Style Four-Bolt Pillow Blocks –
Tapered Adapter Equivalent. 109
QVPH and QVVPH SAF-Style Four-Bolt Pillow Blocks –
Tapered Adapter Equivalent. 111
QVPK and QVVPK 9000 Series Four-Bolt Pillow Blocks –
Tapered Adapter Equivalent. 113
QVPKT and QVVPKT 9000 Series Two-Bolt Pillow Blocks –
Tapered Adapter Equivalent. 102
QVPL and QVVPL Two-Bolt Pillow Blocks –
Straight Bore Equivalent. 94
QVPN and QVVPN SN-Style Two-Bolt Pillow Blocks –
Tapered Adapter Equivalent. 98
QVPR and QVVPR Four-Bolt Pillow Blocks –
Straight Bore Equivalent. 106
QVPX and QVVPX 5000 Series Four-Bolt Pillow Blocks –
Straight Bore Equivalent. 107
QVPXT and QVVPXT 5000 Series Two-Bolt Pillow Blocks –
Straight Bore Equivalent. 103
QVSN and QVVSN SN-Style Two-Bolt Pillow Blocks –
Pure Metric Design 100
QVVTU Take-Up Blocks –
Straight Bore Equivalent. 136
Seal and Cover Options. 16
Shafting 65
Solid-Block Mounted Spherical Roller Bearing
Product Data Tables 89
TA/DV TAA/DAA Series (tapered adapter lock) 212
TA4DI and TAA4DI DI-Style Four-Bolt Pillow Block 226
TA4SD and TAA4SD Special Duty-Style Four-Bolt Pillow Block . 224
TAAPG SN-Style Four-Bolt Pillow Blocks 237
TAAPH SAF 500-Style Four-Bolt Pillow Blocks 230
TAAPH0 SAF 230-Style Four-Bolt Pillow Blocks 234
TAAPH0 SDAF 230-Style Four-Bolt Pillow Blocks 235
TAAPH1 SDAF 231-Style Four-Bolt Pillow Blocks 236
TAAPH6 SAF 600-Style Four-Bolt Pillow Blocks 232
TAAPH6D SDAF 600-Style Four Bolt Pillow Blocks 233
TAAPHD SDAF 500-Style Four-Bolt Pillow Blocks 231
TAASN 3000 Series Four-Bolt Pillow Block 239
TAASN 3100 Series Four-Bolt Pillow Block 241
TACK and TAACK Piloted Flange Cartridges 245
TADI and TAADI DI-Style Two-Bolt Pillow Block 219
TAFB and TAAFB Square Flange Blocks 248
TAFC and TAAFC Square Piloted Flange Cartridges 247
TAFK and TAAFK 9000 Series Square Flange Blocks. 253
TAFNL and TAAFNL Series Flange Blocks –
Tapered Adapter Equivalent. 249
Take-Up Frames 257
TAMC and TAAMC Cartridge Blocks 254
TAPA and TAAPA SAF-Style Two-Bolt Pillow Blocks 214
TAPH and TAAPH SAF-Style Four-Bolt Pillow Blocks 228
TAPK and TAAPK 9000 Series Four-Bolt Pillow Blocks 222
TAPKT and TAAPKT 9000 Series Two-Bolt Pillow Blocks 220
TAPN and TAAPN SN-Style Two-Bolt Pillow Blocks 216
TASD and TAASD Special Duty-Style Two-Bolt Pillow Blocks . . 218
TATU and TAATU Take-Up Units 255
THD Heavy Duty Take-Up Frames 261
V-Lock® Series (taper lock) 90

06-26 Order No. 10785 | Timken® is a registered trademark of The Timken Company. | All other trademarks are property of their respective owners. | © 2026 The Timken Company | Printed in U.S.A.

To view more Timken catalogs, go to www.timken.com/catalogs for interactive versions, or to download the Timken catalog app for your smartphone or mobile device scan the QR code or go to timkencatalogs.squawqr.com.

TIMKEN

The Timken team applies their know-how to improve the reliability and performance of machinery in diverse markets worldwide. The company designs, makes and markets bearings, gear drives, automated lubrication systems, brakes, clutches, chain, couplings, linear motion products and related industrial motion rebuild and repair services.

Price: USD $75

www.timken.com