TIMKEN

Installation Manual

8, 10, 12, 14-Inch Bore
Sheave Pac®
Bearing Assembly

This procedure is to be viewed as a form of general suggestion and as a means of communicating concerns about potential installation issues only. It is not to be viewed as a declaration of installation methods to be followed. Because these instructions are merely suggestions, they may or may not be altered as the customer and/or installer sees fit. Therefore, it is the responsibility of the customer to ensure careful and accurate assembly handling and installation. Any and all damage incurred as a result of the handling and installation procedure shall void all bearing component warranty.

BEARING ASSEMBLY CHARACTERISTICS

Assembly P/N:	NP954426-902A1	NP932743-902A1	NP101986-902A1	NP195121-902A1
Assembly Bore:	8 in.	10 in.	12 in.	14 in.
Bearing K-Factor:	1.83	1.76	1.63	1.90
Seal O.D. Under Snap Ring	10.358 in.	13.154 in.	14.967 in.	16.957 in.
Assembly Bench Endplay (BEP):	0.015 in. to 0.020 in.	0.024 in. to 0.029 in.	0.023 in. to 0.028 in.	0.022 in. to 0.027 in.
Approximate Assembly Weight:	40 lbs	60 lbs	70 lbs	105 lbs
Intended Application:	Crown/Travelling Block	Crown/Travelling Block	Crown/Travelling Block	Crown/Travelling Block
Max. Suggested Operating Speed:	175 RPM	275 RPM	300 RPM	300 RPM

Suggested Fitting Practice

Assembly P/N		NP954426-902A1		NP932743-902A1		NP101986-902A1		NP195121-902A1	
		(in.)	(mm)	(in.)	(mm)	(in.)	(mm)	(in.)	(mm)
Bearing Bore	Minimum	8.0000	203.200	9.9990	253.975	12.0000	304.800	14.0000	355.600
	Maximum	8.0010	203.225	10.0000	254.000	12.0010	304.825	14.0020	355.651
Pin Diameter	Minimum	7.9960	203.098	9.9960	253.898	11.9960	304.698	13.9950	355.473
	Maximum	7.9980	203.149	9.9980	253.949	11.9980	304.749	13.9990	355.600
Corresponding Fits	Minimum	0.0020L	0.051L	0.0040L	0.102L	0.0050L	0.127L	0.0070L	0.178L
	Maximum	0.0050L	0.127L	0.0010L	0.025L	0.0020L	0.051L	0.0001L	0.025L
Bearing O.D.	Minimum	10.8750	276.225	13.6875	347.663	15.5000	393.700	17.5000	444.500
	Maximum	10.8760	276.250	13.6895	347.713	15.5020	393.751	17.5020	444.551
Sheave Bore	Minimum	10.8710	276.123	13.6835	347.561	15.4960	393.598	17.4960	444.398
	Maximum	10.8730	276.174	13.6855	347.612	15.4980	393.649	17.4980	444.449
Corresponding Fits	Minimum	0.0020T	0.051T	0.0020T	0.051T	0.0020T	0.051T	0.0020T	0.051T
	Maximum	0.0050T	0.127T	0.0060T	0.152T	0.0060T	0.152T	0.0060T	0.152T
Resulting Installation Force Through the Cup (lbf) [1]	Minimum	7,500		6,500		7,500		9,700	
	Maximum	19,000		20,000		25,000		30,000	

[1] These values may vary depending on actual fitting practice and condition of the sheave bore.

Bearing Rating

Assembly P/N	NP954426-902A1		NP932743-902A1		NP101986-902A1		NP195121-902A1	
	(lbf)	(Newtons)	(lbf)	(Newtons)	(lbf)	(Newtons)	(lbf)	(Newtons)
$C_{90(1)}$	25,600	114,000	35,700	159,000	34,200	152,000	45,200	201,000
$Ca_{90(1)}$	14,000	62,100	20,300	90,500	21,000	93,500	23,800	106,000
$C_{90(2)}$	44,500	198,000	62,200	277,000	59,500	265,000	78,700	350,000
$Co_{(2)}$	364,000	1,622,000	428,000	1,902,000	590,000	2,620,000	888,000	3,940,000

BEARING ASSEMBLY LUBRICATION

A. Initial Lubrication

The Timken® Sheave Pac® assembly is prelubricated, presealed, and unitized at a Timken manufacturing facility. Accordingly, one of the unique features of the assembly is its maintenance free, self-contained design. As a result, regreasing of this assembly is not an option due to the bearing component geometry. Therefore, it is suggested that the grease line ports to sheaves that contain the Sheave Pac assembly be plugged to eliminate any effort to grease these assemblies during operation. Note that the lines to sheaves containing standard assemblies must remain operational for regreasing per the current process. Please contact your Timken representative if specialized equipment is used that may require additional lubricant or subsequent lubricant in service.

NOTE:

This assembly contains the optimum amount of grease from Timken. Grease must not be added or removed.

B. Operating Grease Purge

Please note that although this assembly cannot be regreased once installed, minimal grease will be purged from the assembly during the initial run-in period. This leakage will decrease to a normal "weeping" after this period. This is normal and expected for this kind of assembly during application operation.

SUGGESTED INSTALLATION PROCEDURE

NOTE:

This procedure is to be viewed as a form of general suggestion and as a means of communicating concerns about potential installation issues only. It is not to be viewed as a declaration of installation methods to be followed. Because these instructions are merely suggestions, they may or may not be altered as the customer and/or installer sees fit. Therefore, it is the responsibility of the customer and/or installer to ensure careful and accurate assembly handling and installation. Any and all damage incurred as a result of the handling and installation procedure shall void all bearing Limited Warranty.

NOTE:

Any information and/or guidelines from any oil field governing body should take precedence over and supplement this information for roller bearings operated under the jurisdiction of that governing body.

NOTE:

Typical bearing lifting practices utilizing straps/chains around the bearing must not be employed. Doing so will cause damage to the seals.

NOTE:

Lifting holes have been incorporated into the cup outer diameter (O.D.) to aid in lifting. Please refer to Step 3 of the ***Mounting of the Bearing into Sheave*** *section for further details.*

A. Mounting of the Bearing into Sheave

General Installation Information

A. Installation Methods:

- The preferred method of overcoming the tight fit between the bearing outer diameter and the sheave inner diameter is with press force and appropriate tooling. This document focuses on this method.
- Installation methods that do not use press force need to be reviewed by Timken before use. Press force is the preferred method. Other methods can damage Sheave Pac bearing assemblies.

B. Required Equipment:

- Press capable of handling sheave and providing the required assembly installation force (see tables on pg. 2).
- Size-specific assembly installation tooling.
- Crane/hoist and lifting/handling fixture designed to safely handle Sheave Pac assembly to ensure that no contact is present with the entire seal.

C. General Cautions:

- Sheave Pac assembly must not be cooled to facilitate installation unless process is reviewed by Timken. Contact your Timken representative to facilitate this review.
- Sheave must not be heated to facilitate installation unless the customer and/or end user utilizes a procedure that verifies no damage has been inflicted upon the sheave components.
- If customer selects sheave heating as an option, the sheave bore must not exceed 200º F (93.3º C).
- Special care must be used during the removal of the bearing packaging. Use of sharp objects may cause damage to the assembly components. Particular care must be taken to ensure no seal damage results from the use of sharp objects or cutting tools.
- Typical bearing lifting practices utilizing straps/chain around the bearing must not be employed. Doing so will cause damage to the seal. For additional details, refer to Step 3 of the section entitled **Mounting of the Bearing into Sheave.**
- Overcoming the interference fit between the bearing and sheave by use of impact process (hammer/drift/etc.) is not suggested. Doing so will cause damage to the seals.

Step 1

Ensure that the sheave bore, lead-in chamfers and snap ring grooves are in acceptable dimensional condition and free of sharp corners, raised material, dents, nicks, burrs, gouges, and corrosion.

NOTE:

Any surface imperfections on the sheave bore must be carefully filed and/or stoned down completely prior to assembly. These imperfections can cause difficulty in assembly, create stress risers during application loading, as well as cause excessive installation damage to the seal outside diameter (O.D.), which may directly increase the chance of contamination ingress and cause premature damage to both the bearing assembly and the sheave.

Step 2

With the sheave resting with the bore axis in the vertical direction, arrange the sheave on the press table/support.

NOTE:

The overall width of the Sheave Pac assembly is wider than the sheave inner hub; therefore, the sheave must be securely supported while allowing the Sheave Pac assembly to be installed correctly without 'bottoming out' on the press table/support. Options for this include, but are not limited to, supporting the sheave on adequate blocks or a support ring or utilizing an opening in the press table/support itself to allow the Sheave Pac assembly to be completely and correctly installed in one step.

NOTE:

*Ensure that **all** of the lifting equipment including, but not limited to, the crane and lifting fixtures meet any necessary hoisting regulations for this lifting and handling operation, prior to beginning the next step.*

Step 3

The pregreased, presealed and unitized Sheave Pac assembly must be installed as a complete assembly. A lifting fixture may be designed/produced to accommodate the handling and installation procedure. Utilizing this potential fixture, carefully remove the bearing assembly from the container and packaging. Straps/chains must not be used around the bearing for lifting. Doing so will lead to seal damage.

NOTE:

Any and all lifting fixture(s)/mechanism(s) shall be designed to ensure no damage is done to the assembly or its components. Particular care must be taken with the entire seal to ensure that no contact or interaction is present between the lifting fixture(s)/mechanism(s) incorporated into the procedure and the seal. Please see diagram below, and refer to page 8 for a graphical representation of a typical cone bore lifting fixture(s)/mechanism(s).

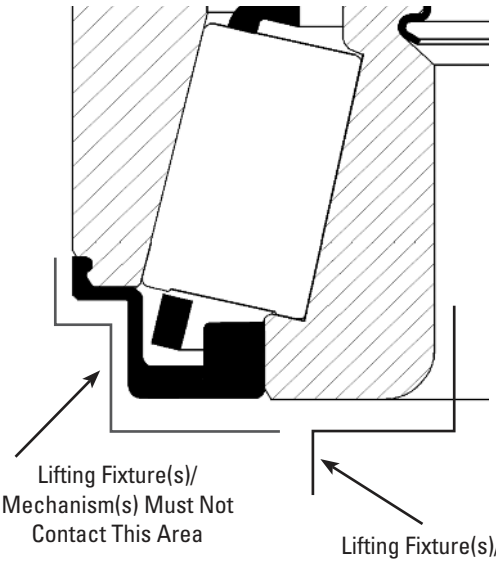

Fig. 1

***NOTE:**

8" Assembly: Maximum Fixture Dimension Must Not Exceed 9.25".
10" Assembly: Maximum Fixture Dimension Must Not Exceed 11.5".
12" Assembly: Maximum Fixture Dimension Must Not Exceed 13.5".
14" Assembly: Maximum Fixture Dimension Must Not Exceed 15.5".

NOTE:

M8x1.25 metric threaded lifting holes have been incorporated into the cup O.D. to aid in lifting. Threaded eyebolts or swivel hoists used for lifting must not have a threaded length beyond 12mm for 12" and 14" bore, 10mm for 10" bore, and 9mm for 8" bore. The use of longer thread length will result in internal bearing damage.

NOTE:

Use of the lifting holes will require the provided lifting hole plugs to be removed and re-installed in the cup O.D. It is suggested that when the button head cap screw is re-installed, it is torqued to 160 in-lbs for lubricated threads or 200 in-lbs for dry threads.

NOTE:

Care must be taken to ensure nothing, including grease, is introduced to the bearing through the lifting holes if plugs are removed and re-installed.

NOTE:

*It is suggested that an adequate length of strap is used in conjunction with the lifting holes to ensure no contact is present between the strap and the seal. For additional details, refer to Step 3 of the section entitled **Mounting of the Bearing into Sheave.***

Step 4

Complete any necessary measurements of the bearing assembly, snap ring grooves, sheave, etc., for aid in the installation of assembly to the center of the sheave.

NOTE:

It is suggested that the bearing assembly is centered in the sheave to ensure uniform loading across each of the bearing rows during operation.

Step 5

Evenly apply general purpose, lithium complex grease to assembly O.D. with particular care to coat each seal O.D. to aid in the installation of the assembly as well as minimize potential seal damage.

Step 6

Carefully lower the assembly to rest at the entrance of the sheave bore using special caution not to damage the bearing and/or seal components.

Step 7

With the bearing resting on the sheave bore entrance, remove any lifting equipment that may interfere with continued installation and carefully (using human force) apply enough installation pressure to insert the bottom seal O.D. portion of the assembly into the sheave until the cup

NOTE:
The Sheave Pac assembly must remain carefully aligned with the sheave bore throughout this step in order to decrease the potential for seal O.D. damage.

NOTE:
Before moving to the next step, ensure that the cup is completely engaged with the sheave, as shown in Figure 2.

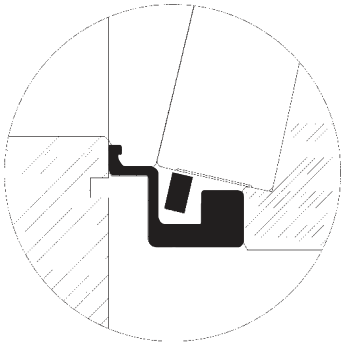

Fig. 2

Step 8

With the bearing assembly carefully centered and started into the sheave bore entrance, carefully place size-specific installation tooling (manufactured to meet the surrounding seal dimensional requirements shown in Fig. 3, Fig. 4, and Fig. 5) on the top side of cup/seal interface so as not to damage/displace seal components.

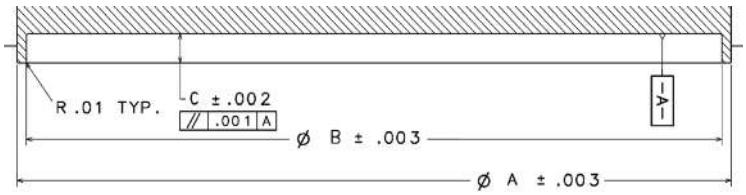

Fig. 3

Assembly Bore	A (+/-0.003 in.)	B (+/- 0.003)	C (+/- 0.00 2 in.)
8 in.	10.775	10.550	0.500
10 in.	13.588	13.200	0.750
12 in.	15.400	15.000	0.610
14 in.	17.400	17.000	0.625

Fig. 4

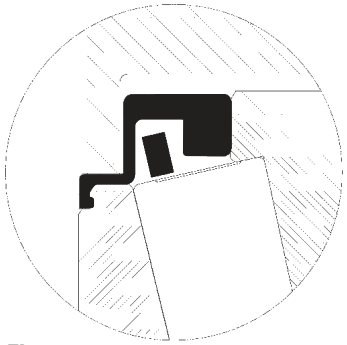

Fig. 5

NOTE:
The Sheave Pac assembly installation tooling shall be manufactured as a disk/plate to allow a complete 360 degree contact between the tool and the assembly for a uniform load distribution during installation into the sheave bore. It is suggested that the installation plate be hardened material to minimize handling/storage damage.

NOTE:
Prior to use, ensure that the installation plate is in acceptable dimensional condition and free of sharp corners, raised material, dents, nicks, burrs, gouges, and corrosion. Any surface imperfections should be carefully filed and/or stoned down completely prior to use. These imperfections may cause damage to the seal during assembly installation.

Step 9

With the bearing and seal installation initiated manually to engage the metal-to-metal contact between the cup and the sheave, carefully ensure that the sheave/bearing is centered under the press ram.

Step 10

Gradually inch the press ram down until it gently comes into contact with the installation tooling without creating an impact load on the system.

Step 11

With the press ram resting on the installation tooling, gradually increase the applied load to continue the installation of the Sheave Pac assembly into the sheave bore until clearance is available to install the top snap ring behind the assembly.

Step 12

With the bearing assembly installed, remove the load from the press and remove the installation tooling.

Step 13

Install the snap rings into the sheave.

NOTE:
Limited space is available around the seal for snap ring installation. Care must be taken to ensure seal damage is not incurred during this snap ring installation procedure.

Step 14

Repeat Steps 1-13 as necessary for additional sheaves for a complete block build.

B. Mounting of the Bearing/Sheave onto Pin

General Installation Information

A. Required Equipment:

- Crane/hoist and lifting/handling fixture designed to safely handle sheaves containing a Sheave Pac assembly.

B. General Cautions:

- Sheave and bearing assembly should be lifted by means of the sheave to ensure neither the bearing nor the snap rings carry the combined weight of the sheave and bearing assembly.

Step 1

Ensure that the pin O.D. and lead-in chamfers are in acceptable dimensional condition and free of sharp corners, raised material, dents, nicks, burrs, gouges, and corrosion.

NOTE:

Any surface imperfections on the pin O.D. must be carefully filed and/or stoned down completely prior to assembly. These imperfections can cause difficulty in assembly, create stress risers during application loading and cause installation damage to the cone bore clip and seals. This may directly increase the chance of contamination ingress and cause premature damage to the bearing assembly.

Step 2

Evenly apply general purpose, lithium complex grease to the Sheave Pac assembly bore to aid in the installation of the assembly and minimize any potential installation damage.

NOTE:

During the suggested grease application, it is suggested that the assembler physically ensure that the bore clip is seated into the cone bore grooves.

NOTE:

*Ensure that **all** of the lifting equipment including, but not limited to, the crane and lifting fixtures meet any necessary hoisting regulations for this lifting and handling operation, prior to beginning the next step.*

Step 3

Utilizing safe lifting/handling practices, carefully locate the sheave and Sheave Pac assembly above the pin for installation. Depending on block design, this step may vary to include carefully locating the pin for insertion through a stack of sheaves resting with axes of rotation in the horizontal direction. Ensure that the sheave and bearing assembly remain perpendicular to the pin for proper installation alignment.

Step 4

Gradually lower the sheave and Sheave Pac assembly onto the pin while ensuring that the sheave and bearing assembly remain level and perpendicular to the pin for improved installation. Depending on block design, this step may vary to include carefully inserting the pin through a stack of sheaves resting with axes of rotation in the horizontal direction. Ensure that the pin remains level and perpendicular to both the sheave and bearing assembly for improved installation.

NOTE:

The pin must remain aligned in the assembly cone bores during installation to minimize any potential binding and installation damage to both the bore clip and the seals.

Step 5

Repeat Steps 1-4 as necessary for complete block build.

NOTE:

Once sheaves/bearings are installed onto shaft, sheaves need to be rotated several times to ensure lubrication is coating all bearing surfaces and that no binding is experienced.

C. Dismounting of the Bearing

The bearing can be dismounted in the reverse order of mounting.

GENERAL BEARING ASSEMBLY STORAGE & HANDLING

A. General Comments

Multiple cautions and notes of careful attention are also included throughout this suggested installation procedure. This suggested installation procedure includes a number of notes and cautionary statements. *It is based on Timken's internal evaluations which cannot anticipate all conditions in the field and there may be other methods of installation that may be more suitable in the judgment and experience of the end user or installer.* Because these instructions are merely suggestions, they may or may not be altered as the customer and/or installer sees fit. *Therefore, it is the responsibility of the customer and/or installer to ensure careful and accurate assembly handling and installation. Any and all damage incurred as a result of the handling and installation procedure shall void all bearing Limited Warranty.*

B. Bearing Assemblies

Bearing assemblies should be stored in a horizontal position (vertical bearing axis) in order to avoid cone or cup ovality. Unmounted assemblies should be stored in their original packaging and kept in a location that is clean and free from moisture and contamination. Periodic inspection of stored bearings should be completed and any undesirable conditions should be corrected immediately. It is suggested that any stored bearing assemblies that show evidence of moisture contamination not be placed into service because their performance potential may be decreased due to contamination and/or corrosion damage.

NOTE:

Special care must be used during the removal of the bearing packaging. Use of sharp objects may cause damage to the assembly components. Particular care must be taken to ensure no seal damage results from the use of sharp objects or cutting tools.

It is not necessary to wash new bearings to remove any preservative for rust protection that was applied at the factory. This preservative has very little lubrication value and will not contaminant the lubricant that is used in or around the bearing.

All tools should be clean and in good condition. The work benches and area in which assembly work is done should be kept clean. Assemblies should not be installed near welding booths or machines where chips, dirt or any form of contamination are likely to get on or in the bearings.

Typical bearing lifting practices utilizing straps/chains around the bearing must not be employed. Doing so will cause damage to the seals.

NOTE:

M8x1.25 metric threaded lifting holes have been incorporated into the cup O.D. to aid in lifting. Threaded eyebolts or swivel hoists used for lifting must not have a threaded length beyond 12mm for 12" and 14" bore and 10mm for 10" bore. The use of longer thread length will result in internal bearing damage.

NOTE:

Use of the lifting holes will require the provided lifting hole plugs to be removed and re-installed in the cup O.D. It is suggested that when the button head cap screw is re-installed, it is torqued to 160 in-lbs for lubricated threads or 200 in-lbs for dry threads.

NOTE:

It is suggested that an adequate length of strap is used in conjunction with the lifting holes to ensure no contact is present between the strap and the seal. Refer to Fig. 1 on page 4.

Please note that any and all lifting fixtures should be designed to ensure no damage is done to the assembly or its components. Particular care must be taken around the entire seal to ensure that no contact or interaction is present between the lifting fixtures incorporated into the procedure and the seal. Upon lifting of the bearing assembly, no impact loading shall be applied to the assembly components during handling, transportation or installation as this may cause bearing performance issues during application operation. At no time shall the bore clip or the seals be removed from the assembly as damage to these components will result.

C. Sheaves with Bearing Assemblies Installed

When lifting, transporting and/or storing sheaves with bearing assemblies installed, the method of doing so must be done by means of the sheave to ensure neither the bearing assembly nor the snap rings carry the combined weight of the sheave and bearing assembly. Please note that the overall width of the bearing assembly is greater than that of the typical sheave, therefore anytime the sheave is to be set down, a support between the sheave and the resting surface must be used in order to eliminate any potential for damage to the cone back-face and seal.

D. Crown / Traveling Block Assemblies with Assemblies Installed

When transporting travelling blocks for any reason, it is suggested that the block remain in an orientation that allows the bearing assembly axis of rotation to remain in the horizontal plane to minimize water from pooling at the seal location. If the block must be laid upon its side, it is suggested that the bearings be covered/protected from this potential pool of water in an effort to minimize contamination ingress.

SHELF LIFE AND STORAGE OF GREASE-LUBRICATED BEARINGS AND COMPONENTS

To help you get the most value from our products, Timken provides guidelines for the shelf life of grease-lubricated ball and roller bearings, components and assemblies. Shelf life information is based on Timken and industry test data and experience.

Shelf Life Policy

Shelf life should be distinguished from lubricated bearing/component design life as follows:

Shelf life of the grease-lubricated bearing/component represents the period of time prior to use or installation.

The shelf life is a portion of the anticipated aggregate design life. It is impossible to accurately predict design life due to variations in lubricant bleed rates, oil migration, operating conditions, installation conditions, temperature, humidity and extended storage.

Shelf life values, available from Timken, represent a maximum limit and assume adherence to the storage and handling guidelines suggested in this catalog or by a Timken associate. Deviations from the Timken storage and handling guidelines may reduce shelf life. Any specification or operating practice that defines a shorter shelf life should be used.

Timken cannot anticipate the performance of the grease lubricant after the bearing or component is installed or placed in service.

TIMKEN IS NOT RESPONSIBLE FOR THE SHELF LIFE OF ANY BEARING/COMPONENT LUBRICATED BY ANOTHER PARTY.

Storage

Timken suggests the following storage guidelines for our finished products (bearings, components and assemblies, referred to as "products"):

- Unless directed otherwise by Timken, products should be kept in their original packaging until they are ready to be placed into service.
- Do not remove or alter any labels or stencil markings on the packaging.
- Products should be stored in such a way that the packaging is not pierced, crushed or otherwise damaged.
- After a product is removed from its packaging, it should be placed into service as soon as possible.
- When removing a product that is not individually packaged from a bulk pack container, the container should be resealed immediately after the product is removed.
- Do not use product that has exceeded its shelf life. Contact your local Timken sales engineer for further information on shelf life limits.
- The storage area temperature should be maintained between 0° C (32° F) and 40° C (104° F); temperature fluctuations should be minimized.

- The relative humidity should be maintained below 60 percent and the surfaces should be dry.
- The storage area should be kept free from airborne contaminants such as, but not limited to, dust, dirt, harmful vapors, etc.
- The storage area should be isolated from undue vibration.
- Extreme conditions of any kind should be avoided.

Due to the fact that Timken is not familiar with your particular storage conditions, we strongly suggest following these guidelines. However, you may be required by circumstances or applicable government requirements to adhere to stricter storage requirements.

Most bearing components typically ship protected with a corrosion-preventive compound that is not a lubricant. These components may be used in oil-lubricated applications without removal of the corrosion-preventive compound. When using some specialized grease lubrications, we advise you to remove the corrosion-preventive compound before packing the bearing components with suitable grease.

Graphical Representation Of Typical Cone Bore Lifting Fixture.

NOTE:

Please contact your Timken representative for additional details and availability of bearing assembly specific lifting fixtures.

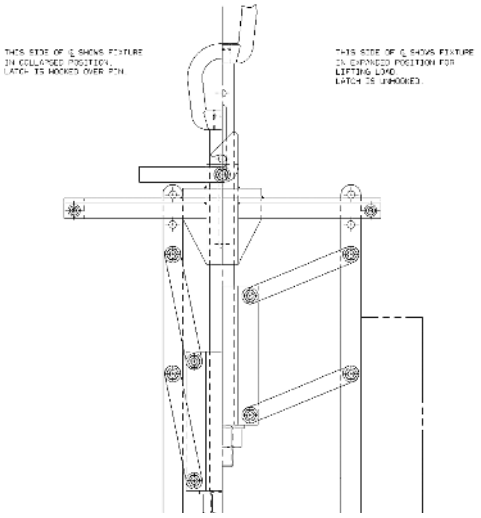

Fig. 4

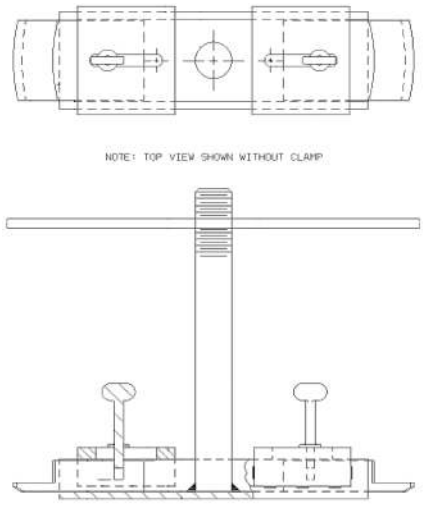

Fig. 5

07-15: 29 Order No. 10463 | Timken® is a registered trademark of The Timken Company. | © 2015 The Timken Company | Printed in U.S.A.

TIMKEN

The Timken team applies their know-how to improve the reliability and performance of machinery in diverse markets worldwide. The company designs, makes and markets high-performance steel as well as mechanical components, including bearings, gears, chain and related mechanical power transmission products and services.

www.timken.com