TIMKEN

Technical Article

# Improving Bearing Life
## in Wind Turbine Mainshafts and Gearboxes



TIMKEN

# Improving Bearing Life in Wind Turbine Mainshafts and Gearboxes

- The need for a larger-megawatt (MW) class of turbines has increased, but scaling up traditional turbine designs is not the answer.
- Another option is a conversion upgrade using a tapered double inner (TDI) roller bearing.

## Abstract

During the early days of wind turbine development, the sub-megawatt-class turbines typically used spherical roller bearings (SRBs) in the mainshaft position with significant success. As the development need for larger-megawatt (MW)-class turbines increased, our competitors' SRB mainshaft bearing was "scaled up" in size and design. However, documented field performance issues in mainshaft SRBs for the multi-MW class underscored its limitations for this application.

With a mature supply chain of large bore tapered roller bearings (TRBs), the current industry trend is the conversion of SRBs to TRBs in turbines greater than 1MW. The table below highlights typical mainshaft design configurations by turbine size.

**Table 1**

| Design Firms | < 1.5 MW | 2-5 MW | 5 MW+ |
|---|---|---|---|
| Vestas | SRB | SRB | 2TS |
| GE Wind Energy | SRB | SRB/TDI | |
| Gamesa | SRB | SRB | 2TS |
| Enercon | TDI + CRB | TDI + CRB | TDO |
| Mingyang | SRB | TDO | |
| Suzlon | SRB | SRB | |
| Guodian | SRB | SRB | TDO |
| Siemens | SRB | SRB/TDO | TDO |
| Acciona (Nordex) | SRB | SRB | |
| Goldwind | TDI + CRB | TDO | TDO |
| Dongfang | SRB | 2TS | 2TS |
| CSIC | SRB | SRB | TDO |
| Senvion (formerly REpower) | SRB | SRB | |
| Alstom Power | 2TS | 2TS | |
| Northern Power Systems | TDI + CRB | 2TS | |
| Windtech Consultants | 2TS | | |
| Romax | TDI + CRB | | |
| Aerodyn | TDO | | |

Tapered Roller Bearing: TS = Tapered Single; TDI = Tapered Double Inner; TDO = Tapered Double Outer

## Author

**Zack Broadbent**
Application Engineer

## Table of Contents

I. **Current State: Turbine Design** 3

II. **What is Driving the Change?** 4

III. **Enhanced Solutions** 6

- TDI Conversion Upgrade for Existing Turbines 6
- TDI Design and Predictive Modeling 7
- Advanced Modeling 9

IV. **Mainshaft Assembly: Field Turbine Installation** 12

- TDI Monitoring & Performance 13
- Two-Year TDI Physical Inspection 13
- Five-Year TDI Physical Inspection 14
- Temperature Readings 15
- Grease Sampling and Testing 16
- Deflection Measurements 18
- Shock Pulse Monitoring 19

V. **Conclusion** 20

VI. **References** 20

**Figure 1:**

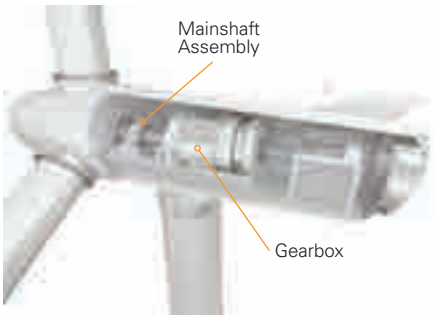


Three-Point Mount Mainshaft Arrangement

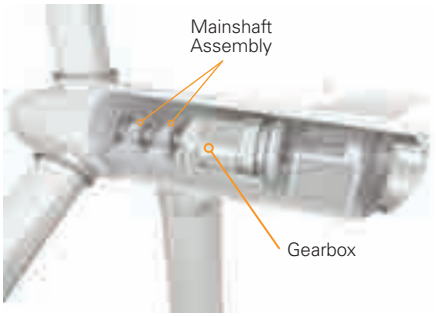


Four-Point Mount Mainshaft Arrangement

## I. Current State: Turbine Design

As measured by total MW, modular wind turbine designs dominate the industry and commonly use SRBs to support and carry the mainshaft loads. Classified as three- and four-point designs, Figure 1 illustrates the nomenclature.

The three-point mount in the left-hand illustration has a single support of the dynamic loading with a single two-row SRB in front of the gearbox. There are two additional support points located at the gearbox torque arms, which yields three support points. Advantages of the three-point mount arrangement utilizing SRBs include:

- Shorter nacelle package with reduced turbine mass
- High system deflection and misalignment capability
- Commercially economic and mature supply chain

These advantages are offset by distinct disadvantages. For example, during significant thrust loading from wind, the downwind (DW) row of the SRB is fully loaded while the upwind (UW) row is typically unloaded. When combined with an ever-dynamic wind regime, the load zone size and location change with an increased and unintended load transmission into the gearbox. Due to the required radial internal clearance (RIC) within the SRB, the axial deflections and moment loads transfer to the gearbox planetary carrier bearings.

As the SRB wears during operation, this additional loading affects planetary gear meshes and planetary gears and bearing loads. The performance of the single SRB designs has experienced significant field performance issues much earlier than the intended design life of 20 to 25 years. These early failures have significantly increased field repair and lifetime operation cost.

Similarly, the four-point mount uses two gearbox torque arms to help support the mainshaft with two 2-row SRBs for the mainshaft support, which yields four support points. Normally the UW floating SRB carries predominantly radial loads while the DW fixed SRB carries the majority of the wind thrust loading. This is an improvement over the three-point mount design, but there is increasing field evidence of premature damage to the DW fixed SRB location similar to that of the three-point mount design.

## II. What is Driving the Change?

It is widely accepted that the use of a single SRB in the mainshaft position in multi-MW-class turbines is not the preferred design solution. The primary driver for a change in design philosophy is the premature damage of the SRBs seen in operation. The damage limiting the mainshaft SRB is not classic fatigue, but primarily micropitting, leading to surface fatigue and wear.

The combination of dynamic loading and RIC results in these SRBs exhibiting unseating effects, abnormal load distribution between rows, roller skewing, high cage stress, excessive heat generation, low lambda conditions, Heathcote slip, and roller smearing. An official maximum limit has not been established, but a conventional ratio of permissible thrust to radial loading deemed acceptable for two-row SRBs is approximately 25%.

Thrust loading in the application is many times greater than this limit. With these high axial loads, only the DW row supports both the radial and thrust loading; the UW row is completely unloaded. This is a significant contributor to the micropitting damage and results in a less-than-ideal operating condition. Figure 2 depicts the unequal load sharing.

**Figure 2:** Applied Loads and Unequal Load Sharing

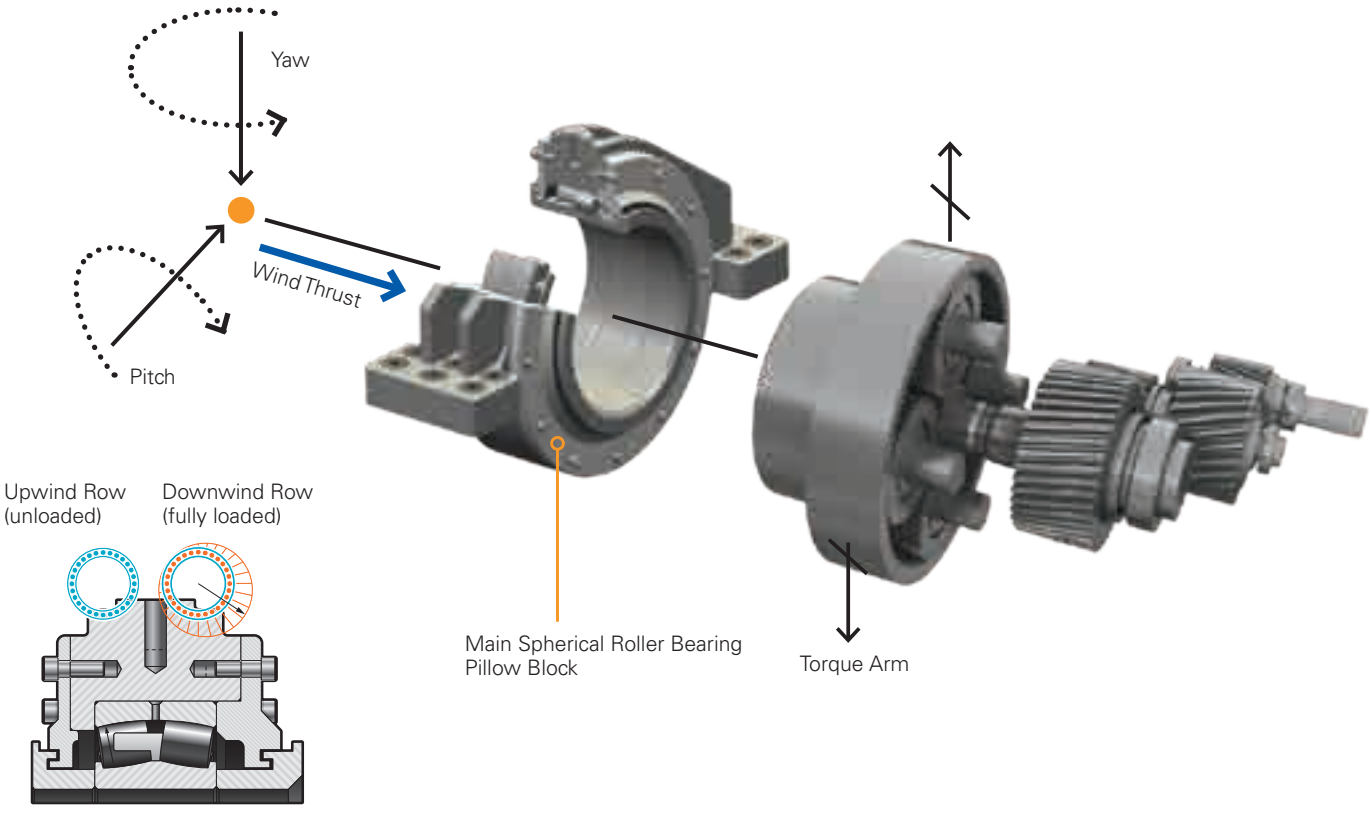

Field observations reveal that all three-point mount turbines experience the same common damage modes, regardless of manufacturer. Although the damage takes longer to develop, many four-point mount arrangements are experiencing the same damage modes. These damage modes are identical and can include micropitting, edge loading, roller end thrust, single piece cage failures, cage and center guide ring wear, and debris damage. The images in Figure 3 below represent actual field damage from a variety of turbine models and MW-class turbines. These unplanned main bearing replacements are costly and have a significant impact on financial performance for the owner/operator.



**1 MW**



**1.3 MW**



**1.5 MW**



**1.65 MW**



**2.1 MW**



**2.3 MW**

**Figure 3:** Common Damage in SRB Mainshaft

Even when the wind turbine mainshaft is equipped with two SRBs utilizing a fixed/float arrangement, axial movement of the mainshaft still occurs due to bearing clearance. A fixed SRB carries the radial and axial load from the rotor, but the floating SRB carries only the radial load.

The mounted clearance plays a major role in permissible movement in both the radial and axial directions. Minimizing radial translation is beneficial to both bearing and system performance, but a reduced mounted bearing clearance increases the risk of an operating preload and the subsequent potential for increased operating temperatures.

## III. Enhanced Solutions

### TDI Conversion Upgrade for Existing Turbines

The TDI bearing has a number of advantages. When following careful assembly and maintenance procedures, the bearing can yield significantly improved system performance. The benefits include:

- Drop-in replacement for SRB
- Preloaded system results in low risk of sliding, skidding, and smearing
- Improved system stiffness
- Eliminates axial mainshaft thrusting into the gearbox



The benefits of a TDI bearing include reduced bearing wear, reduced deflection/load into the gearbox, and increased system rigidity. A TDI mainshaft design can optimize the overall powertrain system due to its design and preload characteristics. The design characteristics help ensure excellent system stability/rigidity, load sharing between rows, and predictable roller-to-race interactions. In SRB replacements, a single preloaded TDI can manage the combination of radial and thrust loads much better than the SRB. The increased bearing stiffness and improved load sharing also help to minimize fretting damage between the bearing inner ring and the shaft.

The TDI is an excellent choice to ensure load sharing across both bearing rows, while being more flexible for system misalignment than a tapered double outer (TDO) design. Having higher load capacity, the bearing preload helps mitigate smearing/skidding and micropitting. Designed as a direct drop-in, the TDI uses the existing OE pillow block housing and shaft without changing shaft and housing fits. Represented in Figure 4 below is a comparison of the TDI to the SRB in an identical housing.

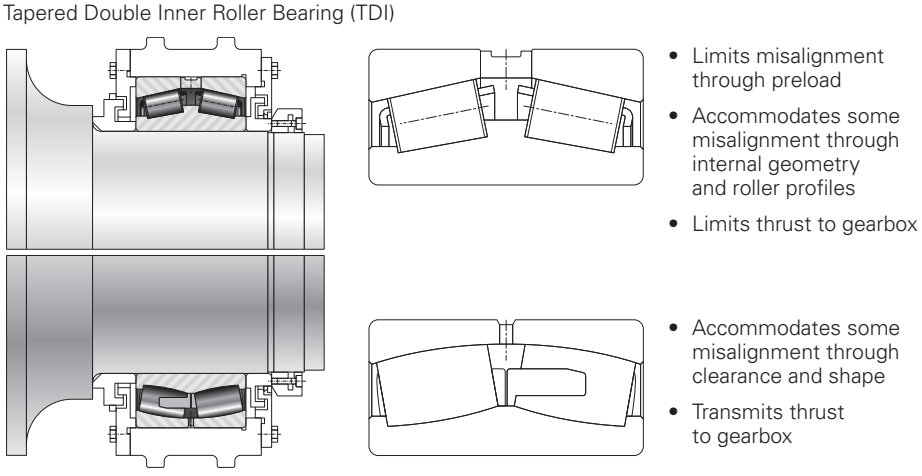


**Figure 4:** TDI Mainshaft Bearing Arrangement

Analysis shows that a preloaded bearing system significantly improves load share between rows, reduces false brinelling, and reduces loads and deflections transmitted to the gearbox. The improved load share improves overall system dynamics and performance. The optimized preloaded system helps ensure excellent system stability in even the heaviest of wind conditions. The specially designed internal geometry controls roller-to-raceway stress profiles and handles the initial system misalignment inherent in these turbine configurations. In uptower field-testing, TDI mainshaft bearings used in a 1.5 MW three-point mount configuration continue to operate exceptionally well and validate the predictions.

## TDI Design and Predictive Modeling

Bearing design criteria include a 20-year or more fatigue life prediction, dynamic stress limits of 1650 MPa, extreme stress limits of 4000 MPa, and the capability of handling a high degree of static and operating misalignment. Timken's proprietary and advanced modeling tool, Syber, considers overall system stiffness and initial imposed bearing misalignment, as well as dynamic misalignment for bearing development. To properly model the support arms, the gearbox connection included specific stiffness information for the axial, radial, and tilting stiffness. Figures 5 and 6 demonstrate the comparison of load zone and load sharing when converting from an SRB to a TDI design.

**Figure 5:** Equivalent Load Cases
Load Zone Calculations for the 240/600 SRB and NP822933-90WA1 TDI:

Spherical Roller Bearing (SRB)

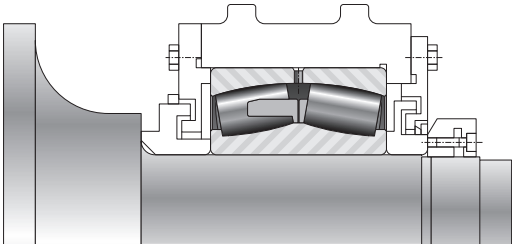

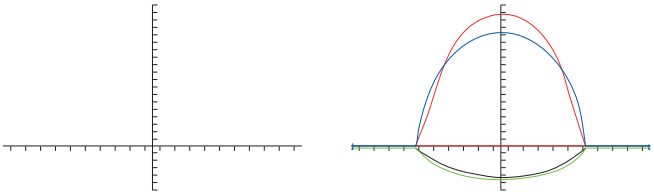

SRB Equivalent Stress Plot = Note: Unloaded Row Which is Typical in Application; **Zero Misalignment**

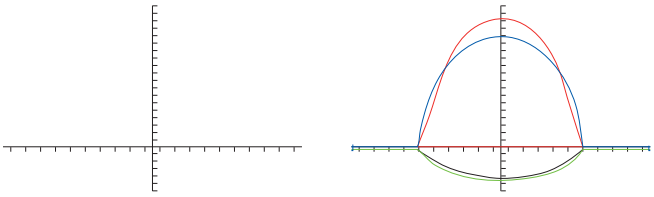

SRB Equivalent Stress Plot = Note: Unloaded Row Which is Typical in Application; **1mrad Misalignment**

Tapered Double Inner Roller Bearing (TDI)

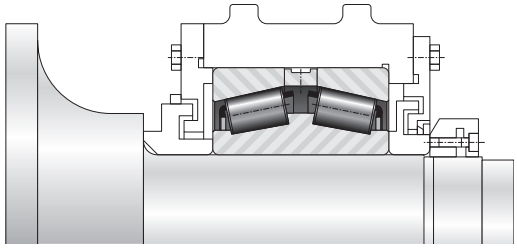

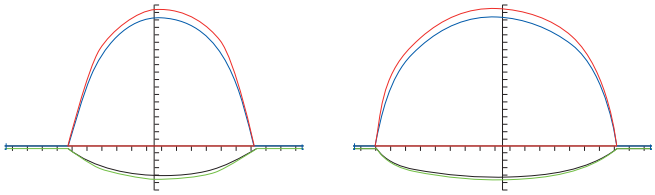

TDI Equivalent Stress Plot = Note: Both Rows Loaded in All Cases; **Zero Misalignment**

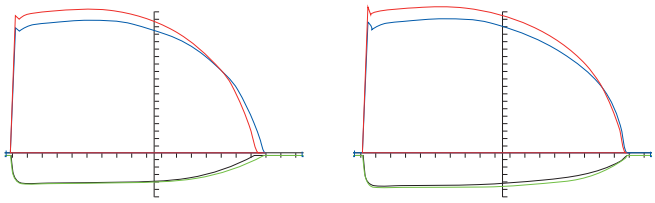

TDI Equivalent Stress Plot = Note: Both Rows Loaded in All Cases; **1mrad Misalignment**

The bearing could easily become misaligned in mounting due to the system tolerances stack-up or the coaxial relationship between the shaft centerline at the bearing position and the gearbox connection centerline with the mainshaft. Optimized internal geometry, combined with proper uptower assembly procedures, mitigates the assembly concerns. Analysis included the angular system displacement as well as the induced misalignment under fatigue and extreme loading to determine the impact on bearing and system performance.

**Figure 6:** Extreme Load Cases
Load Zone Calculations for the 240/600 SRB and NP822933-90WA1 TDI:

Spherical Roller Bearing (SRB)

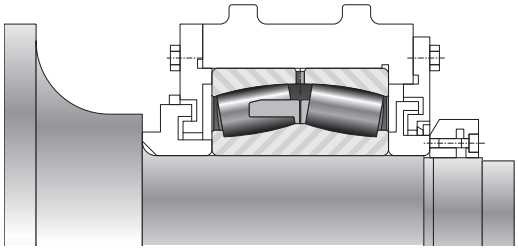

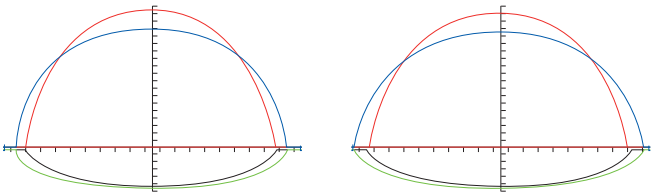

SRB Extreme Stress Plot; **Zero Misalignment**

Tapered Double Inner Roller Bearing (TDI)

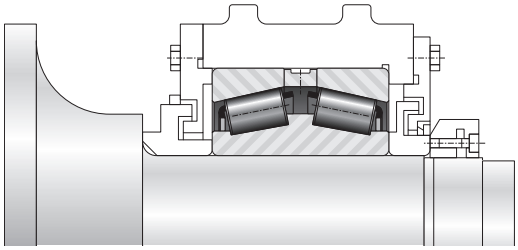

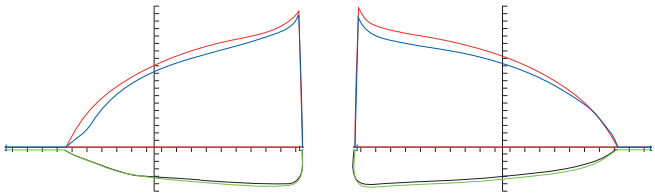

TDI Extreme Stress Plot; **Zero Misalignment**

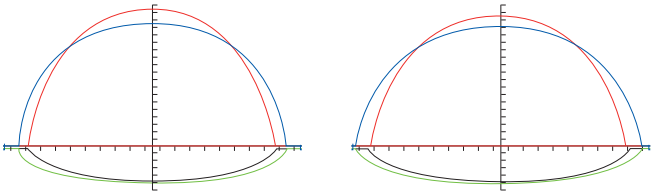

SRB Extreme Stress Plot; **1mrad Misalignment**

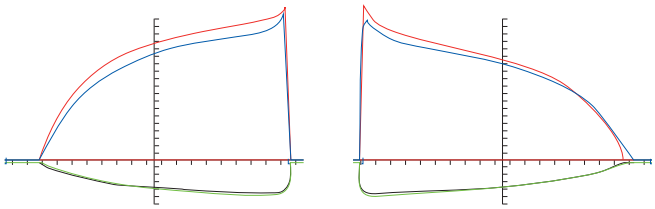

TDI Extreme Stress Plot; **1mrad Misalignment**

## Advanced Modeling

Moving beyond quasi-static bearing analysis, advanced finite element (FE) modeling predicts the directional impact of changing bearing types. Modeling techniques relate to defining linear elastic material properties in the solid models of the shaft and pillow block and defining the bolts as ABAQUS pre-tension beam elements. Figures 7 and 8 depict the overall system modeling.



**Figure 7:** FE Model Set-Up

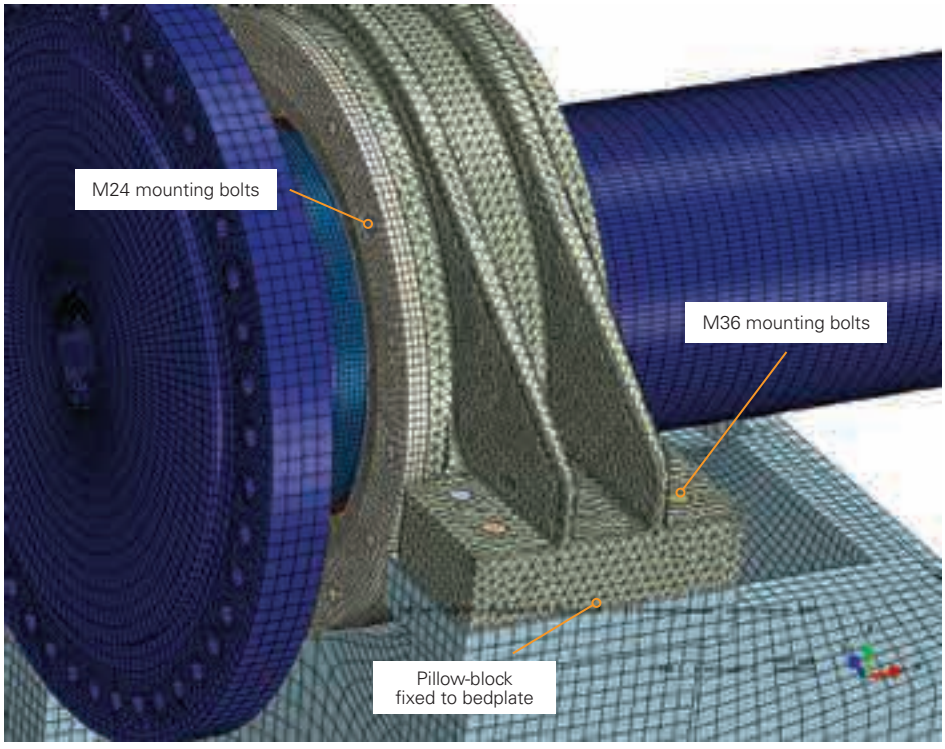


**Figure 8:** FE Model Bolted Connections

Analyzing both the SRB and TDI housed unit, the maximum stress in the pillow block occurs in the lower radius of the support. The highest stress location in the shaft is located at the UW shoulder fillet radius. The bedplate support exhibits the highest stress at the interface of the pillow block and the bedplate.

Figures 9 and 10 highlight the maximum stress location with Table 2 (next page), summarizing the results for both equivalent and extreme load cases. Table 3 (next page) summarizes the bolt stress analysis.

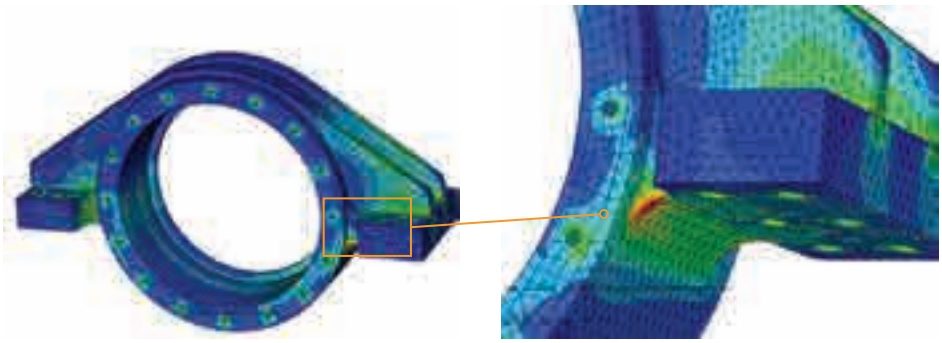

**Figure 9:** Pillow Block Maximum Stress Location

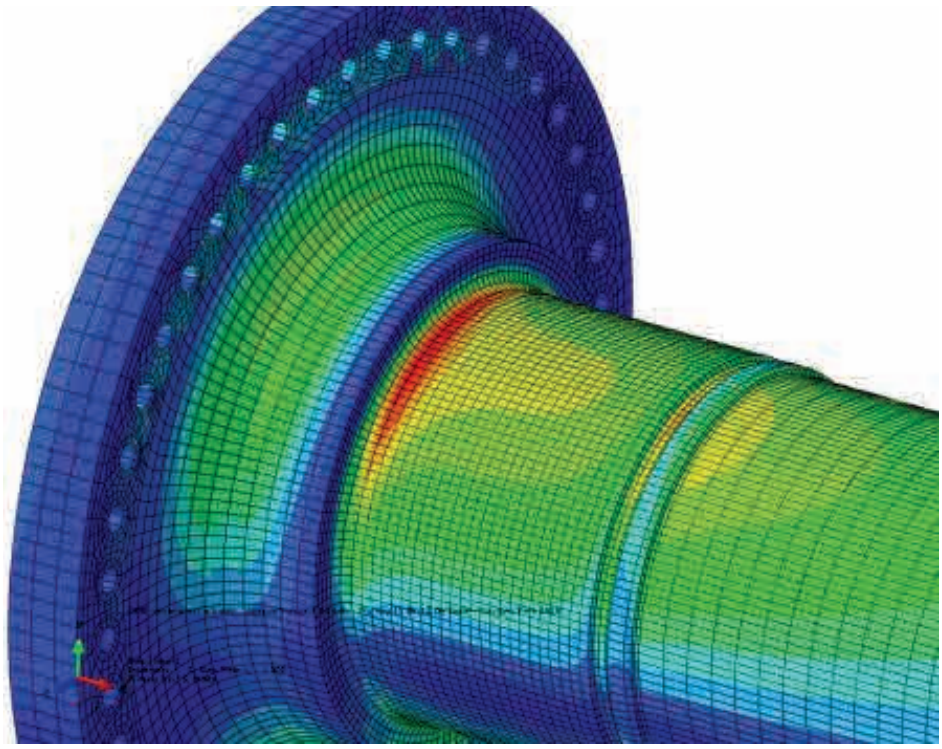

**Figure 10:** Shaft Maximum Stress Location

The stress levels and safety factors indicate very similar performance between the SRB and TDI. Finite element analysis (FEA) predicted minimal changes to the stress levels in all components when comparing the results of the TDI to the SRB. This shows that converting from one bearing type to the other imparts negligible effects on the system.

**Table 2:** 240/600 SRB and NP822933-90WA1 TDI Housed Unit Stress and Shaft Stress Summary

| | SRB | TDI |
|---|---|---|
| **Equivalent Load** | | |
| Pillow Block Stress (MPa) | 67 | 62 |
| | | |
| **Extreme Load** | | |
| Pillow Block Stress (MPa) | 280 | 326 |
| Shaft Stress (MPa) | 274 | 259 |

**Table 3:** 240/600 SRB and NP822933-90WA1 TDI Housed Unit Bolt Analysis Summary

| | SRB Assembly | | TDI Assembly | |
|---|---|---|---|---|
| | M-24 Clamp Bolts | M-36 Mounting Bolts | M-24 Clamp Bolts | M-36 Mounting Bolts |
| **Equivalent Load** | | | | |
| Maximum Stressed Bolt (MPa) | 119 | 96 | 110 | 69 |
| Minimum Stressed Bolt (MPa) | 100 | 90 | 99 | 62 |
| Fatigue Life (Cycles) | 2,300,000 | >1E7 | >1E7 | >1E7 |
| | | | | |
| **Extreme Load** | | | | |
| Maximum Stressed Bolt (MPa) | 166 | 83 | 148 | 79 |
| Minimum Stressed Bolt (MPa) | 100 | 75 | 103 | 66 |
| Fatigue Life (Cycles) | 50,000 | >1E7 | 200,000 | >1E7 |



**Figure 13:** Bed Plate Pillow Block Interface



**Figure 14:** Torque Arm Alignment Measurement



**Figure 15:** MS Assembly Movement Check



**Figure 16:** MS Assembly Measurement

## IV. Mainshaft Assembly: Field Turbine Installation

Timken service engineers supported the installation of three prototype TDI mainshaft bearings. These three installations took place in 2015.

Working closely with the end user in their repair facility, Timken service engineering led the prototype bearing assembly. To make uptower inspection easier, modifications to the housing included additional ports for temperature sensor and shock pulse monitoring.

The holes for the temperature probes are located in the 6:00 position and are intended to contact the small end (thinnest section) of each cup. This also is nearest to the roller-to-rib interface. Additionally, a shock pulse port was added at the 9:00 position when looking upwind. Detailed assembly instructions were used.



**Figure 11:** Pillow Block Install over TDI



**Figure 12:** Completed Assembly

Figures 11 and 12 show a successfully installed bearing.

The uptower assembly occurred with the continued assistance of Timken service engineering and followed the procedures developed in conjunction with the customer. One key aspect is to ensure the main bearing assembly is properly oriented to the gearbox prior to the final installation of the housing to the bedplate. Rotating the mainshaft 360° in each direction after installing the assembly, but before installing the gearbox mount caps or tightening the bearing housing bolts, allows the housing assembly to orient itself with respect to the gearbox connection.

This is possible by turning the gearbox output-shaft brake rotor/locking gear. Once rotation is complete and the housing assembly is "centered," final assembly of the mainshaft mounting bolts occurs per the turbine manufacturer's torque specifications. The procedure for mounting and aligning the mainshaft assembly uptower is depicted in Figures 13-16.

### TDI Monitoring & Performance

As part of the test protocol, frequent inspection involved uptower inspection including borescope, shock pulse measurements (SPM™ Spectrum), temperature readings, grease inspection/sampling, and displacement monitoring.

### Two-Year TDI Physical Inspection

The inspection pictures shown in Figures 17 through 20 represent the condition of the rollers and race after two years of runtime. With no early indications of damage relating to peeling, micropitting, etc., the images show the excellent running condition of the TDI bearing.



**Figure 17:** Bearing Cup Raceway



**Figure 18:** Bearing Cup



**Figure 19:** Bearing Cone Raceway



**Figure 20:** Bearing Cone Raceway

## Five-Year TDI Physical Inspection

The inspection pictures shown in Figures 21 through 26 represent the condition of the rollers and cup and cone races after five years of runtime. The discoloration seen on the bearing races is caused by grease staining during operation as well as corrosion due to water ingress after teardown. This discoloration is purely superficial and does not suggest any performance issues of the bearing in operation. Similar to the TDI with two years of runtime, there is no indication of surface-initiated damage such as micropitting or peeling, and the bearing races appear to be in like-new condition outside of some superficial lube staining and corrosion damage caused by water damage after operation.



**Figure 21:** Upwind Cup Raceway



**Figure 22:** Downwind Cup Raceway



**Figure 23:** Upwind Cone Raceway



**Figure 24:** Downwind Cone Raceway



**Figure 25:** Upwind Roller



**Figure 26:** Downwind Roller

In addition to visual inspection, traces of the race profile were completed to further inspect the condition of the components. Figures 27 and 28 show the results of this inspection on the cup and cone races. The red trace shows the actual race profile, and the blue envelope shows the tolerance band that is targeted when the cup and cone are manufactured. The image below proves that even after five years of service, the race profile still meets the specified geometry for a brand-new cup race.

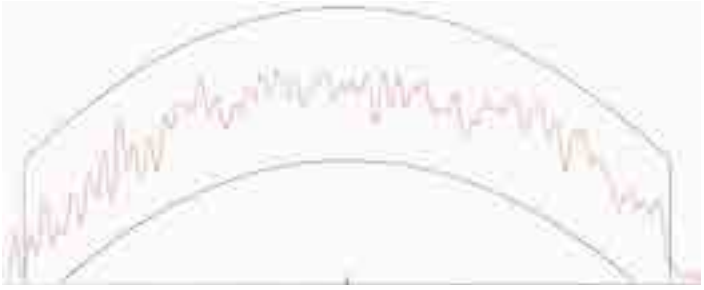

**Figure 27:** Cup Profile Trace with Tolerance Band

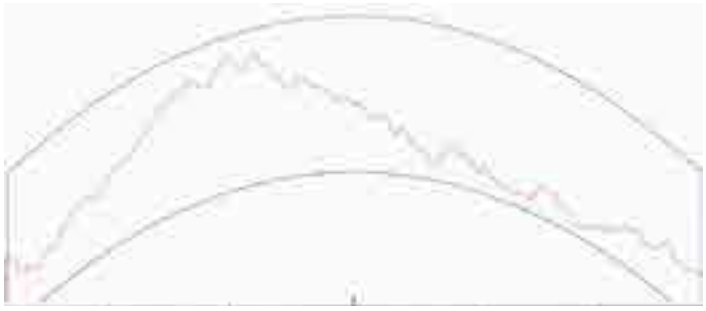

**Figure 28:** Cone Profile Trace with Tolerance Band

## Temperature Readings

The operating temperature of TDI bearings is comparable to an OE SRB, as shown in Figure 29 where the SRB data originates from a neighboring turbine and offers the best comparison point within the wind farm. Depending on ambient condition and nacelle temperature conditions, temperature readings for the TDI ranged from 38° to 46°C, as compared to 36° to 40°C for an OE SRB.

As expected, the preloaded TDI is operating slightly warmer. The difference is attributed to the bearing preload, as well as the previously discussed temperature sensor location being more in the center of the load zone while the OE SRB temperature sensor is closer to the 1:00 position of the housing.

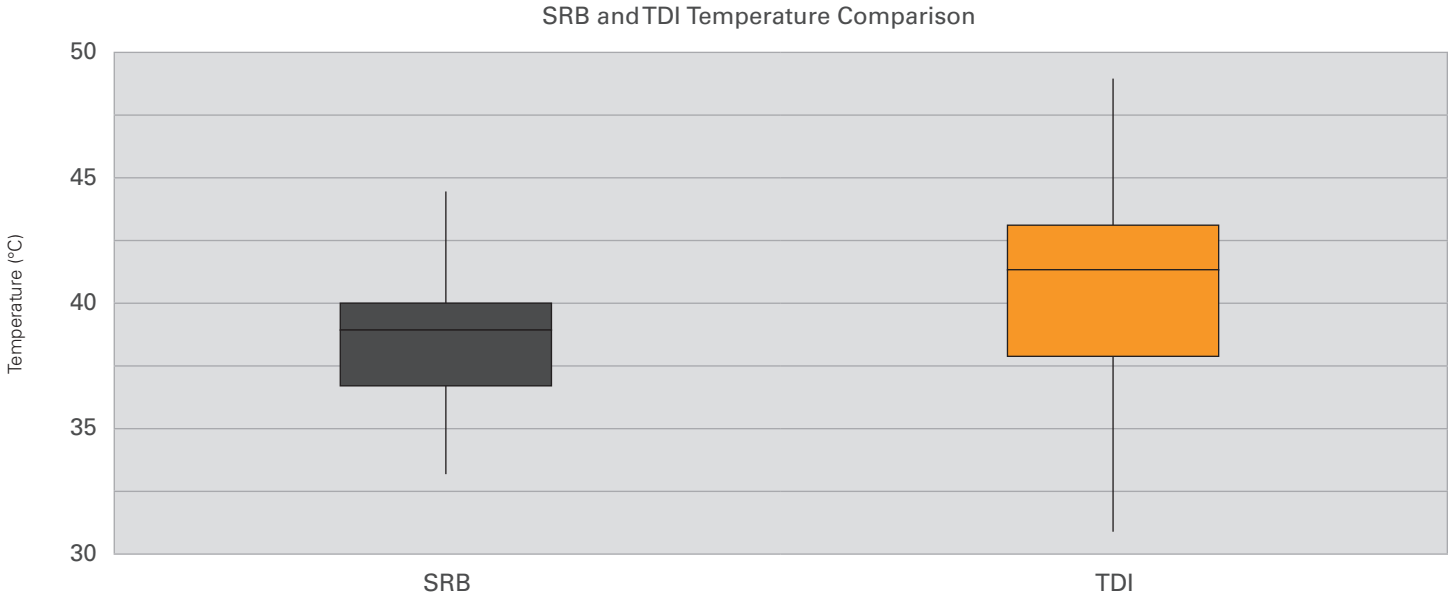


**Figure 29:** Main Bearing Temperature

## Grease Sampling and Testing

In addition to the above measurements and inspections, grease sampling and analysis conducted at an independent lab evaluated the working condition of the grease. Grease samples were taken periodically in the first nine months of bearing life as well as when the bearing was disassembled. Results for each sample are shown in Figure 30 and Table 4. The periodic grease analysis included:

1. Chemical composition (PPM) using ICP analysis per ASTM D1976
2. Iron content (PPM) per ASTM D7690
3. Cone penetration per ASTM D217-10
4. Grease oxidation using Fourier transform infrared (FTIR) spectrometry per ASTM E2412-10

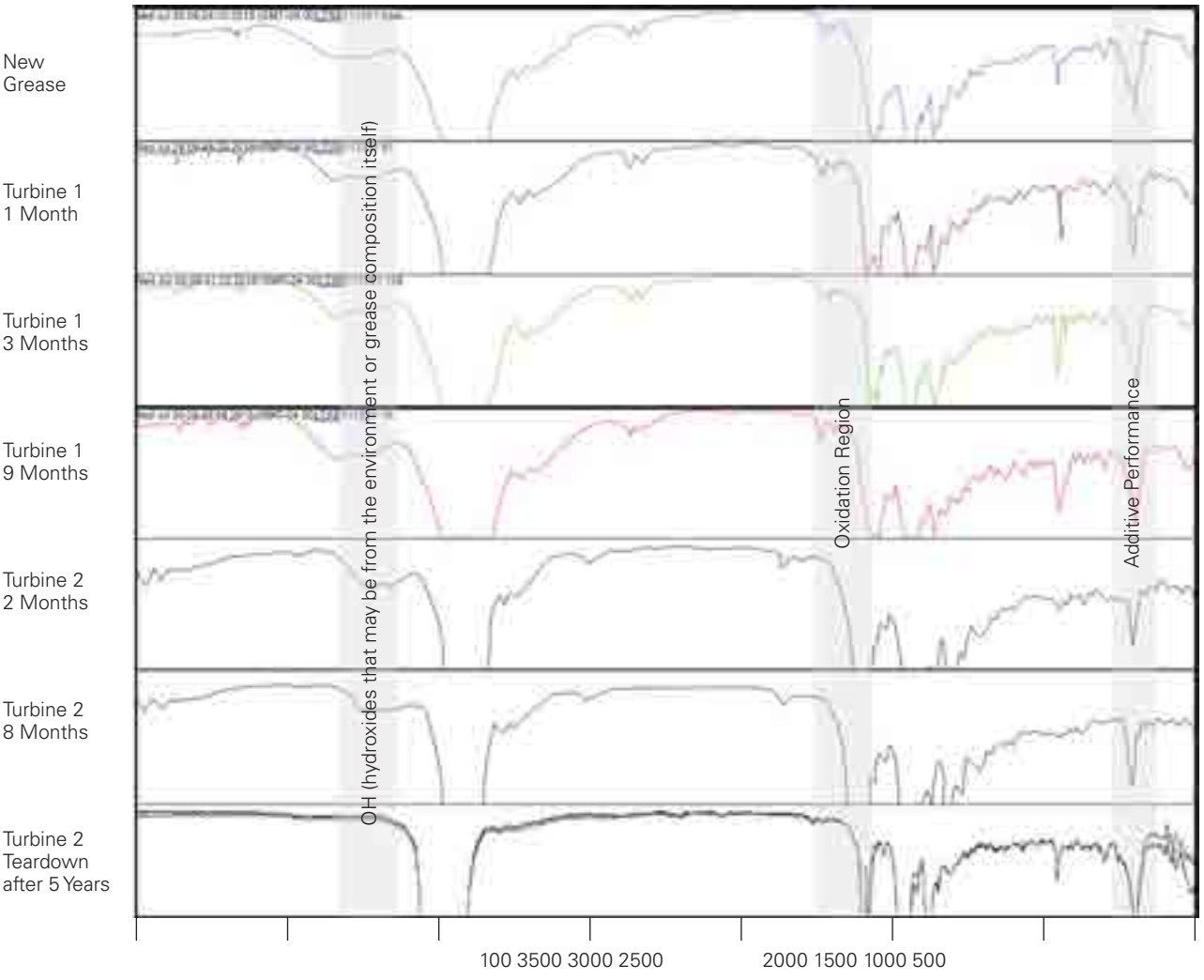


**Figure 30:** FTIR Spectrum

**Table 4:** Grease Analysis Results Summary

| | | Turbine 1 | | | Turbine 2 | | |
|---|---|---|---|---|---|---|---|
| Sample -> | New | 1 Month | 3 Months | 9 Months | 2 Months | 8 Months | Teardown |
| Cone Bleed (%) | 5.6 | 8 | 8 | NA | 7 | NA | 6.3 |
| PEN 60x | 321 | 365 | 365 | 360 | 399 | 360 | 346 |
| NLGI Grade | 1 | 0 | 0 | 0 | 00 | 0 | 0 |
| Fe | 0 | 20 | 15 | 10 | 20 | 40 | 25 |
| Ca | 62 | 40 | 80 | 200 | 20 | 30 | 20 |
| P | 80 | 110 | 110 | 350 | 100 | 110 | 60 |
| Zn | 700 | 700 | 700 | 700 | 750 | 1050 | 975 |
| Mo | 2500 | 2500 | 2500 | 1300 | 2700 | 3400 | 4900 |
| Li | 900 | 900 | 900 | 1000 | 900 | 1000 | 2600 |

Lubrication analysis of the various grease samples includes a sample of new grease and shows no significant change in chemical composition. With observed marginal wear and oxidation, the grease appears to have a slight change in penetration going to a lower consistency, which is typical.

In discussions with the customer as well as the grease manufacturer/supplier, the grease is performing as expected. A desired amount of bleed and relative shear instability properly lubricates and protects against false brinelling. Even at teardown, when the grease may or may not have been replenished on schedule, the grease appears to be within an acceptable range of oil bleed, NLGI grade, and particle count.

FTIR spectrometry shows promising results when comparing the new grease hydroxides, oxidation, and additive performance to that of the turbine grease samples.

There was no significant degradation of the primary grease additives and, overall, the FTIR analysis confirms acceptable grease performance.

## Deflection Measurements

Displacement measurements were taken directly on the mainshaft using sensors mounted with a magnetic base directly on the bedplate. To understand the axial displacement of the shaft on the main bearing and gearbox connection, the results in Figure 31 clearly demonstrate that the displacement of the TDI is approximately one-third that of an SRB.

Directly attributed to the running internal clearance of an SRB versus the mounted preload of the TDI, the preloaded tapered bearing minimizes the transmittal of additional shaft deflection to the gearbox, through the carrier bearings, and to the torque arms. This ultimately should yield improved gearbox performance and reliability.




**Figure 31:** SRB and TDI Axial Displacement Comparison

## Shock Pulse Monitoring

Shock pulse technology is a variant of vibration analysis using an enveloping technique acquired through a tuned transducer. It allows for condition monitoring of slow rotating components and is well suited for mainshaft bearing applications. Shock pulse levels also reflect the amount of metal-to-metal contact in a bearing as it relates to adhesion, micropitting, and early spall detection.

For perspective, Figure 32 represents the shock pulse measurement of a standard OE 240/600 SRB, Timken's WR 240/600YMDWEW919 SRB, and NP822933-90WA1 TDI, respectively. This carpet plot displays the significantly lower shock pulse level of the WR SRB. Comparatively, Timken TDI bearings run at lower shock pulse levels than a standard OE SRB, but at higher levels than the Timken® Wear-Resistant SRB. Figure 32 represent bearings with six months to one year of runtime.

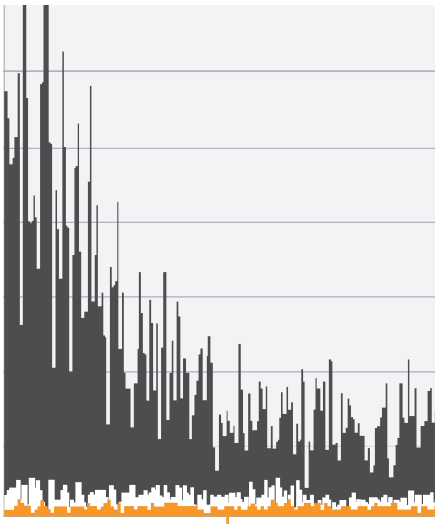

**Figure 32:** Shock Pulse Values

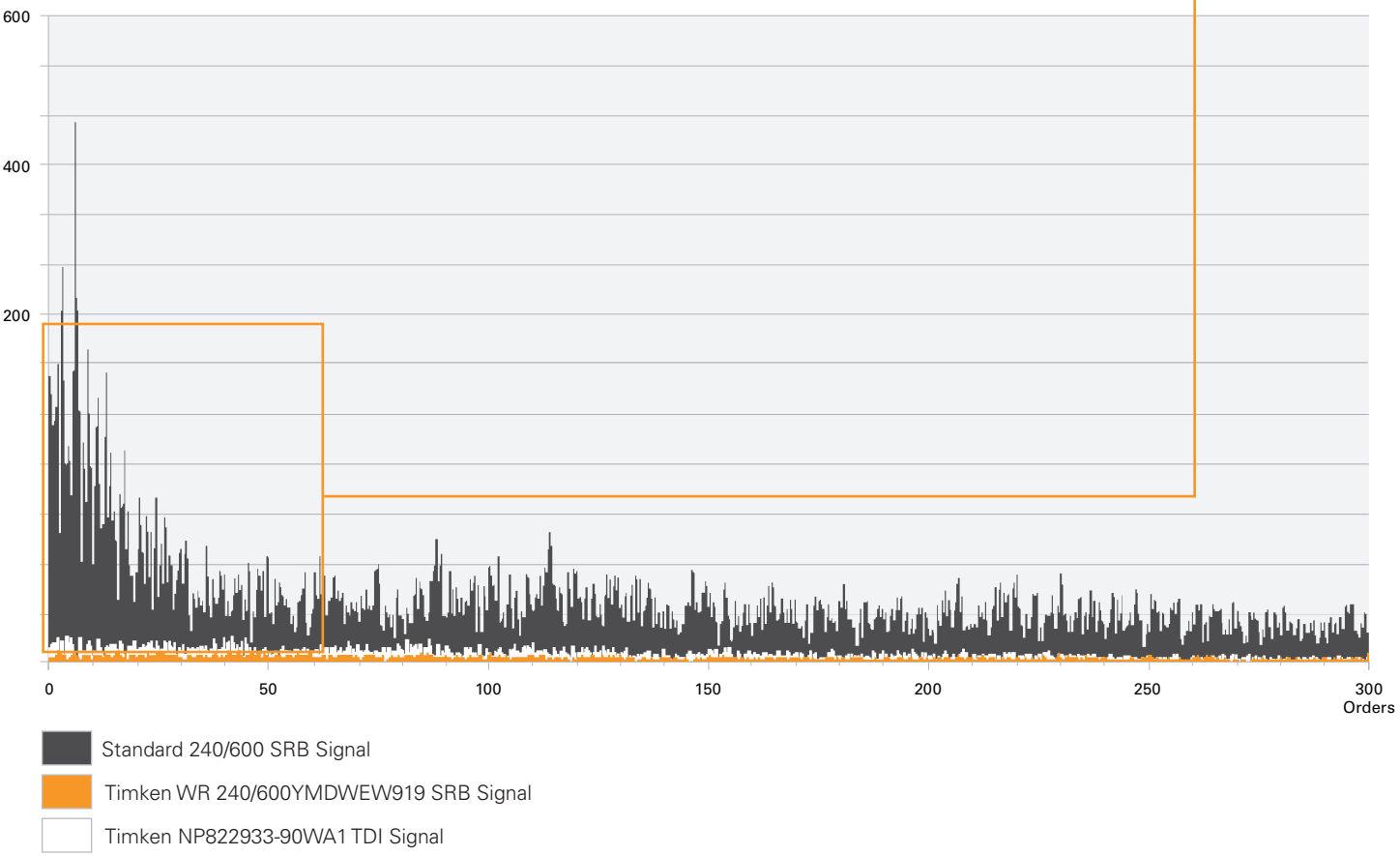

## V. Conclusion

For the long-term financial sustainability of the wind turbine market, the reliability of the mainshaft and gearbox designs must improve. Advances in engineering and market demand have propelled upgrades in recent years, utilizing Timken design solutions for existing SRB three-point mount turbines. The reliability requirement for offshore turbines has driven the use of preloaded TRBs. This same design direction is taking hold for onshore wind farms.

Through field trials, the mainshaft TDI has proven both its reliability as well as its performance. The two bearings removed from service gave no visual indication of wear or the other surface-initiated damage modes that are typically seen in current designs. In addition to visual inspection, profile traces of the bearing rings proved that profile geometry was still within specification after five years of service. Grease evaluations taken after various periods of service suggest excellent bearing performance throughout the life of the turbine.

Improvements in mainshaft design will increase the reliability of the entire power train system and lead to an overall lower total cost of ownership. Retrofitting the SRB in a three-point mount arrangement with a specially designed preloaded TDI improves overall turbine reliability by reducing roller sliding, skidding, and smearing, improving system stiffness, reducing shaft fretting, and significantly reducing axial shaft movement into the gearbox.

## VI. References

1. Badard, G. (2016), "Extending Bearing Life in Wind Turbine Mainshafts," WindTech International, Siteur Publications, The Netherlands.
2. Badard, G. (2016), "Extending Bearing Life in Wind Turbine Mainshafts," Power Engineering, Pen Well Energy Group, Tulsa, OK.
3. Baldwin, B. (2013), "Increasing Bearing Reliability in Main Shaft Support Systems," Windpower Engineering and Development, WTWH Media, Cleveland, OH.
4. Kotzalas, M.N. and G.L. Doll (2012), "Main Shaft Bearings: Life- Limiting Wear and Solutions," The Timken Company, Canton, OH.

The Timken team applies their know-how to improve the reliability and performance of machinery in diverse markets worldwide. The company designs, makes and markets bearings, gear drives, automated lubrication systems, belts, brakes, clutches, chain, couplings, linear motion products and related industrial motion rebuild and repair services.

**www.timken.com**

08-23 Order No. 11540 | Timken® is a registered trademark of The Timken Company. | © 2023 The Timken Company

Stronger. **Commitment.** Stronger. **Value.** Stronger. **Worldwide.** Stronger. **Together.** | **Stronger.** By Design.