TIMKEN

AP™ BEARINGS FOR INDUSTRIAL APPLICATIONS

ABOUT THE TIMKEN COMPANY

As a global leader in bearings and power transmission systems, Timken focuses on precise solution design, materials and craftsmanship to deliver reliable and efficient performance that improves productivity and uptime. Timken offers a full range of bearings, gear drives, automated lubrication systems, belts, chains, couplings and linear motion products along with rebuild and repair services. Timken applies its proven expertise in metallurgy, tribology and mechanical power transmission to create innovative approaches to customers' complex needs. Global availability of products and engineering talent, combined with exceptional service delivery across markets, makes Timken a preferred choice worldwide.

To view more Timken catalogs, go to **www.timken.com/catalogs** for interactive versions, or to download our catalog app to your smart phone or mobile device.

AP™ BEARINGS FOR INDUSTRIAL APPLICATIONS INDEX

INTRODUCTION

Advantages of Timken AP Bearings 4
Bearing Reconditioning 4
Description of Parts 5
Basic Bearing Assembly Dimensions and Ratings 6
Overall Dimensions 7
Shelf Life and Storage 8
Warnings 9

HOW TO IDENTIFY ASSEMBLY AND PART NUMBERS

Bearing Assembly Numbers 12
Standard Part Numbers 13

MOUNTING DESIGNS

Typical Applications 16
Crane Bridge and Trolley Axle 17
Moveable Stadium Roof and Narrow Adapter Mounting 19
Table Rolls 20
Continuous Casting Machine Guide Rollers 21
Elevator Sheaves 22
Ingot Cars 23
Coil Transfer Cars 24
Sintering Car Wheels and Coal Crushers 25
Wood Pulp Beater Spindles and Furnace Wheels 26

TECHNICAL SUPPORT

Shaft/Axle Details 28
Adapters and Mounting Designs 30
Bearing Life Equations 37
Assembly and Disassembly 38
Simplified Installation for Industrial Equipment 42

HOW TO ORDER

AP Bearing Ordering Procedure 48
Basic AP Bearing Assembly Numbers - Method 1 50
Supplemental and Special Assembly Numbers - Method 2 52

INTRODUCTION

Advantages of Timken AP Bearings 4
Bearing Reconditioning 4
Description of Parts. 5

BASIC BEARING ASSEMBLY DIMENSIONS AND RATINGS 6

OVERALL DIMENSIONS 7

SHELF LIFE AND STORAGE OF BEARINGS AND COMPONENTS . . . 8
Shelf Life 8
Storage 8

WARNINGS. 9

To view more Timken catalogs, go to www.timken.com/catalogs for interactive versions, or to download a catalog app for your smart phone or mobile device scan the QR code or go to timkencatalogs.squawqr.com.

INTRODUCTION

When Timken introduced its revolutionary AP™ (All-Purpose) railroad bearings in 1954, it was a railroad industry milestone. Decades later, Timken is a leader in industrial motion and continues to lead in advancing bearing technology through continuous innovation and development.

In addition to railroad applications, AP bearings are successfully used in many types of industrial applications. This can be attributed to many factors including the bearing's high load carrying capacity and its adaptability to a wide variety of applications.

ADVANTAGES OF TIMKEN AP BEARINGS

- Self-contained unit provides substantial cost savings in design and installation. Many mounting parts are available with the bearing assembly.
- Pregreased unit reduces installation costs.
- Preassembled bearing reduces the number of separate parts to be applied and helps reduce the chance of incorrect assembly.
- High quality, tested and improved radial lip seals provide exceptional protection, minimum relubrication and low maintenance.
- Positive alignment of rollers is maintained in the bearing due to its basic tapered roller construction. This distributes the load over the entire roller length and helps to prevent rollers from skewing.
- On-apex design provides true rolling motion with less friction and more resistance to wear.
- Case-hardened and hardened cones, cups and rollers put hardness where it is needed at the working surfaces. The core of these parts, being more ductile, resists the propagation of fatigue cracks and spalls.
- AP bearings are adaptable to a wide range of applications in new designs and changeovers from other bearing types AP bearings range in bore size from 101.6 to 203.2 mm (4 to 8 inches). Optional auxiliary parts can be added to suit a wide range of mounting configurations.

BEARING RECONDITIONING

Timken reconditions bearings and related parts used in railroad rolling stock and industrial equipment at multiple locations around the world. To learn more about repair for AP bearings, contact your Timken representative.

Fig. 1 3D illustration of AP bearing

TIMKEN® AP BEARING ASSEMBLY DESCRIPTION OF PARTS

- The narrow adapter shown in Fig. 1 can be used in many applications. Another type of mounting utilizes a full bore housing (see page 20). While this type of housing is currently unavailable through Timken, most bearing distributors provide a selection from other manufacturers.
- The bearing assembly is pressed on the axle as a completely sealed unit. The axle end cap, cap screws and locking plate can be applied to the axle as a unit. When the axle end cap, as shown in Fig. 1 is used, the locking plate provided locks the cap screws.
- The recessed end cap, not shown, reduces the overall bearing assembly width. A piece of soft wire is required to lock the drilled cap screw heads. A backing spacer can be used in place of a backing ring.

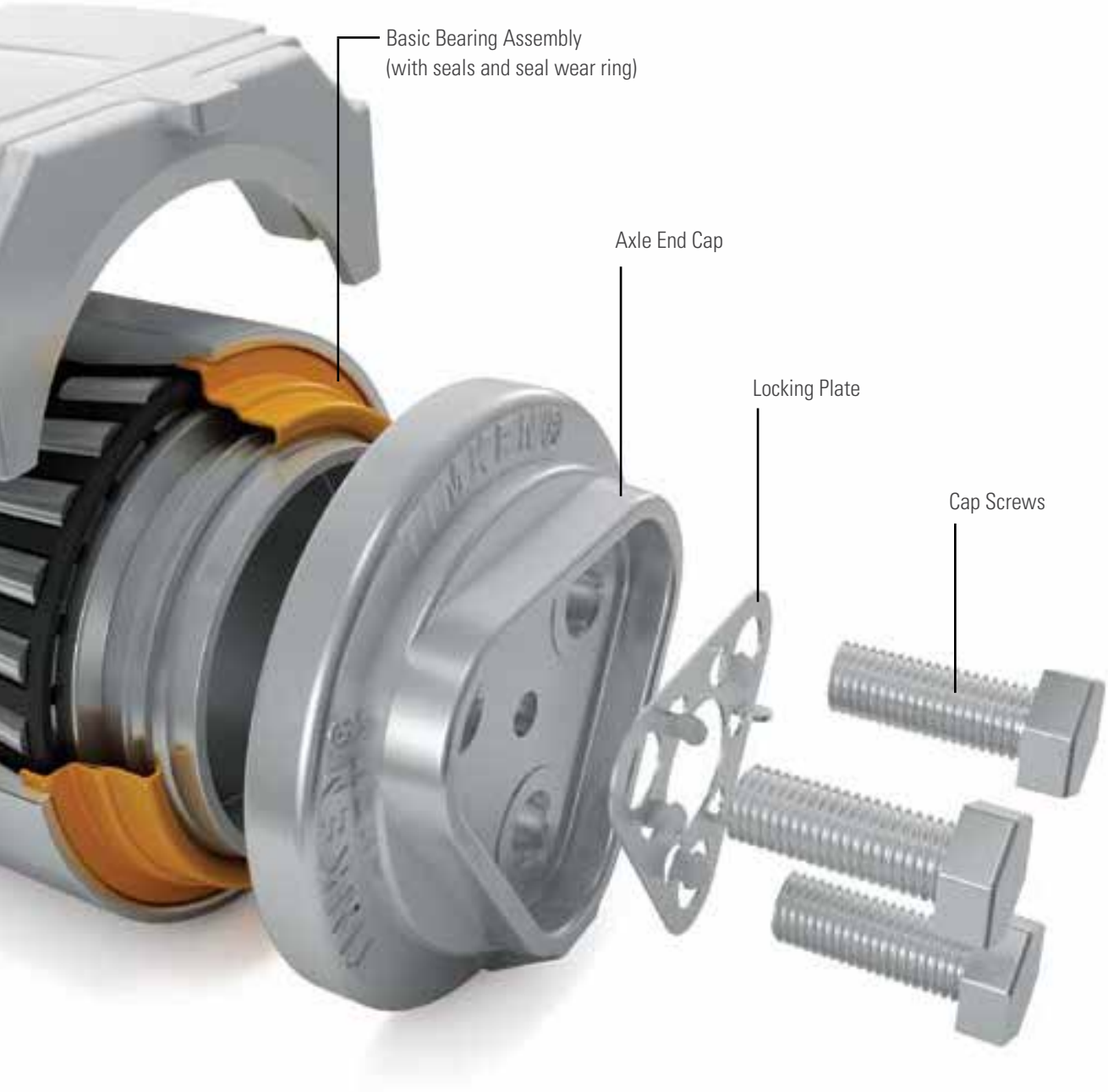

BASIC BEARING ASSEMBLY DIMENSIONS AND RATINGS

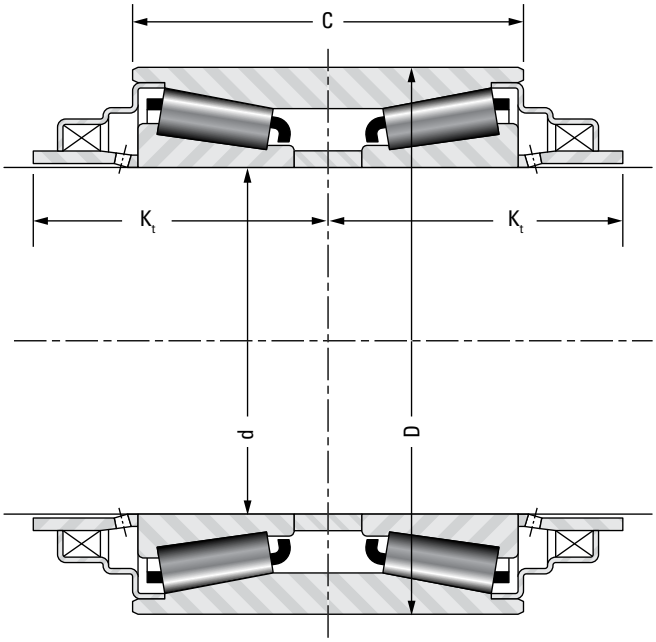

Class	Inner Race (Cone) Number Outer Race (Cup) Number	d [1] Bore	D [2] Outside Diameter	K_t	C Outer Race Width	Dynamic Rating @ 500 RPM For 3000 hr L_{10}		
		mm in.	**mm** in.	**mm** in.	**mm** in.	Radial, C_{90} **N** lbf	Thrust, Ca_{90} **N** lbf	K Factor [4]
B (4 ¼ x 8)	HM120848 HM120817XD	**101.600** 4.0000	**165.100** 6.5000	**91.3** 3.59	**114.300** 4.5000	**120000** 26900	**31000** 7000	2.21
C (5 x 9)	HM124646 HM124618XD	**119.062** 4.6875	**195.262** 7.6875	**108.7** 4.28	**142.875** 5.6250	**172000** 38600	**44500** 10000	2.21
D (5 ½ x 10)	HM127446 HM127415XD	**131.750** 5.1870	**207.962** 8.1875	**113.5** 4.47	**152.400** 6.0000	**186000** 41800	**48500** 10900	2.21
E (6 x 11)	HM129848 HM129814XD	**144.450** 5.6870	**220.662** 8.6875	**120.6** 4.75	**163.512** 6.4375	**195000** 43800	**50700** 11400	2.21
F (6 ½ x 12)	HM133444 HM133416XD	**157.150** 6.1870	**252.412** 9.9375	**136.5** 5.38	**184.150** 7.2500	**266000** 59700	**69000** 15500	2.21
G (7 x 12)	HM136948 HM136916XD	**177.787** 6.9995	**276.225** 10.8750	**134.9** 5.31	**185.725** 7.3120	**305000** 68600	**79200** 17800	2.21
G (7 x 14)	HM136948 HM136916XD	**177.787** 6.9995	**276.225** 10.8750	**134.9** 5.31	**185.725** 7.3120	**305000** 68600	**79200** 17800	2.21
GG (7)	H337846 H337816XD (3)	**177.787** 6.9995	**301.701** 11.8780	**139.7** 5.50	**196.850** 7.7500	**388000** 87300	**132110** 29700	1.69
K (8)	M241547 M241513XD	**203.200** 8.0000	**301.625** 11.8750	**108.0** 4.25	**140.097** 5.5156	**266000** 59700	**86800** 19500	1.76

[1] Cone bore tolerance + 0.025 – 0.000 mm (+ .0010 in. – .0000 in.)
[2] Cup O.D. tolerance + 0.127 – 0.000 mm (+ .0050 in. – .0000 in.)
[3] Cup H337816XD O.D. tolerance is +0.127 + 0.076 mm (+ .0050 in. + .0030 in.)
[4] K Factor is defined as the tapered roller bearing radial to axial dynamic capacity ratio.

NOTE: Special cup O.D. tolerance +0.102 + 0.076 mm (+ .0040 in. + .0030 in.) also available.

OVERALL DIMENSIONS FOR AP BEARINGS

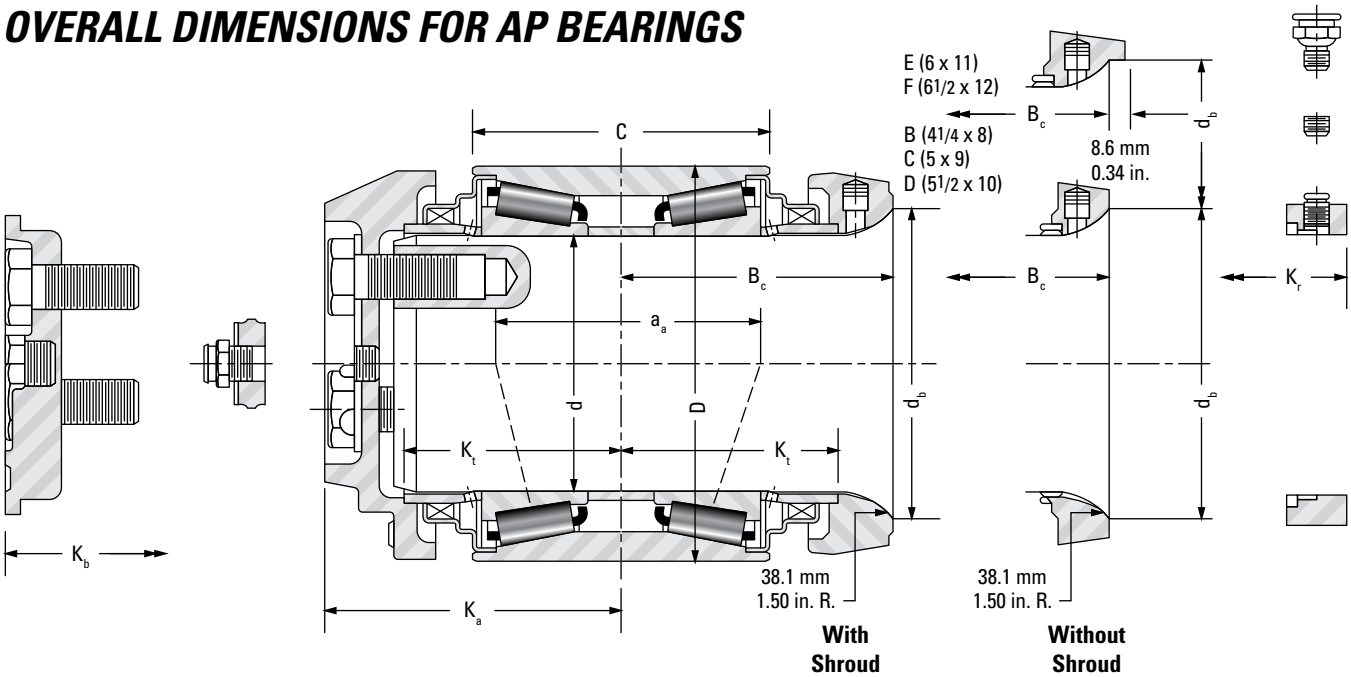

(1) Backing ring assemblies and/or backing spacer may be used on either side of the bearing.

Class	d Bore	D Outside Diameter	B_c	K_t	K_a Max	K_b Max	K_r	C Outer Race Width	d_b Backing Ring With Shroud	d_b Backing Ring Without Shroud	Effective Spread a_a
	mm in.	**mm** in.	**mm** in.	**mm** in.	**mm** in.	**mm** in.	**mm** in.	**mm** in.	**mm** in.	**mm** in.	**mm** in.
B (4 ¼ x 8)	**101.600** 4.0000	**165.100** 6.5000	**117.5** 4.62	**91.3** 3.59	**158.2** (2) 6.23	**99.0** 3.90	**119.9** 4.72	**114.300** 4.5000	**127.0** 5.00	**127.0** 5.00	**79.8** 3.14
C (5 x 9)	**119.062** 4.6875	**195.262** 7.6875	**134.9** 5.31	**108.7** 4.28	**163.8** (2) 6.45	**116.5** 4.59	**137.3** 5.41	**142.875** 5.6250	**149.2** 5.88	**149.2** 5.88	**105.7** 4.16
D (5 ½ x 10)	**131.750** 5.1870	**207.962** 8.1875	**139.7** 5.50	**113.5** 4.47	**158.2** (2) 6.23	**122.9** 4.84	**142.1** 5.59	**152.400** 6.0000	**161.9** 6.38	**161.9** 6.38	**116.8** 4.60
E (6 x 11)	**144.450** 5.6870	**220.662** 8.6875	**150.8** 5.94	**120.6** 4.75	**169.7** 6.68	**130.0** 5.12	**149.2** 5.88	**163.512** 6.4375	**177.8** 7.00	178.56	**127.5** 5.02
F (6 ½ x 12)	**157.150** 6.1870	**252.412** 9.9375	**163.5** 6.44	**136.5** 5.38	**181.6** 7.15	**145.9** 5.74	**165.1** 6.50	**184.150** 7.2500	**190.5** 7.50	7.03	**143.3** 5.64
G (7 x 12)	**177.787** 6.9995	**276.225** 10.8750	**150.8** 5.94	**134.9** 5.31	**180.0** 7.09	**144.3** 5.68	**163.5** 6.44	**185.725** 7.3120	**203.2** 8.00	191.26	**144.8** 5.70
G (7 x 14)	**177.787** 6.9995	**276.225** 10.8750	**163.5** 6.44	**134.9** 5.31	**180.0** 7.09	**144.3** 5.68	**163.5** 6.44	**185.725** 7.3120	**203.2** 8.00	7.53	**144.8** 5.70
GG (7)	**177.787** 6.9995	**301.701** 11.8780	**155.6** 6.12	**139.7** 5.50	**184.8** 7.28	**149.1** 5.87	**168.3** 6.62	**196.850** 7.7500	**203.2** 8.00	–	**154.9** 6.10
K (8)	**203.200** 8.0000	**301.625** 11.8750	–	**108.0** 4.25	–	**122.2** **4.81**	–	**140.097** 5.5156	–	–	**115.8** 4.56

(2) On Classes B, C, and D the lubricant fitting extends beyond the axle end cap. Dimensions given include the lubricant fitting.

HOW TO USE THIS CATALOG

We designed this catalog to help you find the Timken bearings best suited to your equipment needs and specifications. Timken offers an extensive range of bearings and accessories in both imperial and metric sizes. For your convenience, size ranges are indicated in millimeters and inches. Contact your Timken engineer to learn more about our complete line for the special needs of your application.

This publication contains dimensions, tolerances and load ratings, as well as engineering sections describing mounting and fitting practices for shafts and housings, internal clearances, materials and other bearing features.

It provides valuable assistance in the initial consideration of the type and characteristics of the bearings that may best suit your particular needs.

ISO, as used in this publication, refers to the International Organization for Standardization and JIS refers to the Japanese Industrial Standards.

Updates are made periodically to this catalog. Visit www.timken.com/catalogs for the most recent version of the Spherical Roller Bearing Catalog.

SHELF LIFE AND STORAGE OF GREASE-LUBRICATED BEARINGS AND COMPONENTS

To help you get the most value from our products, Timken provides guidelines for the shelf life of grease-lubricated ball and roller bearings, components and assemblies. Shelf life information is based on Timken and industry test data and experience.

SHELF LIFE

Shelf life should be distinguished from lubricated bearing/component design life as follows:

Shelf life of the grease-lubricated bearing/component represents the period of time prior to use or installation.

The shelf life is a portion of the anticipated aggregate design life. It is impossible to accurately predict design life due to variations in lubricant bleed rates, oil migration, operating conditions, installation conditions, temperature, humidity and extended storage.

TIMKEN IS NOT RESPONSIBLE FOR THE SHELF LIFE OF ANY BEARING/COMPONENT LUBRICATED BY ANOTHER PARTY.

European REACH compliance

Timken lubricants, greases and similar products sold in standalone containers or delivery systems are subject to the European REACH (Registration, Evaluation, Authorization and Restriction of CHemicals) directive. For import into the European Union, Timken can sell and provide only those lubricants and greases that are registered with ECHA (European CHemical Agency). For further information, please contact your Timken engineer.

STORAGE

Timken suggests the following storage guidelines for our finished products (bearings, components and assemblies, referred to as "products"):

- Unless directed otherwise by Timken, products should be kept in their original packaging until they are ready to be placed into service
- Do not remove or alter any labels or stencil markings on the packaging
- Products should be stored in such a way that the packaging is not pierced, crushed or otherwise damaged
- After a product is removed from its packaging, it should be placed into service as soon as possible
- When removing a product that is not individually packaged from a bulk pack container, the container should be resealed immediately after the product is removed
- The storage area temperature should be maintained between 0° C and 40° C; temperature fluctuations should be minimized
- The relative humidity should be maintained below 60 percent and the surfaces should be dry
- The storage area should be kept free from airborne contaminants such as, but not limited to, dust, dirt, harmful vapors, etc.
- The storage area should be isolated from undue vibration
- Extreme conditions of any kind should be avoided

Due to the fact that Timken is not familiar with your particular storage conditions, we strongly suggest following these guidelines. However, you may be required by circumstances or applicable government requirements to adhere to stricter storage requirements.

Be careful in selecting lubrication, however, since different lubricants are often incompatible.

When you receive a bearing shipment, do not remove products from their packaging until they are ready for mounting so they do not become corroded or contaminated.

Store bearings and bearing housings in an appropriate atmosphere so they remain protected for the intended period.

WARNINGS

WARNING

Failure to observe the following warnings could create a risk of death or serious injury.

Proper maintenance and handling practices are critical. Always follow installation instructions and maintain proper lubrication.

Never spin a bearing with compressed air. The components may be forcefully expelled.

Overheated bearings can ignite explosive atmospheres. Special care must be taken to properly select, install, maintain and lubricate mounted bearings that are used in or near atmospheres that may contain explosive levels of combustible gases or accumulations of dust such as grain, coal, or other combustible materials. Consult your equipment designer or supplier for installation and maintenance instructions.

If hammer and bar are used for installation or removal of a part, use a mild steel bar (e.g., 1010 or 1020 grade). Mild steel bars are less likely to cause release of high speed fragments from the hammer or bar or the part being installed or removed.

Ungrounded bearings can create static electricity that can ignite in an explosive atmosphere such as combustible gases or accumulations of dust such as grain, coal, or other combustible materials. Proper dissipation of such potential static electricity discharge must be assured to prevent any such explosion.

Below -40˚ C (-40˚ F), polymer housings may break. Select stainless or steel housings that operate to lower temperatures.

Tensile stresses can be very high in tightly fitted bearing components. Attempting to remove such components by cutting the inner ring may result in a sudden shattering of the component, causing fragments of metal to be forcefully expelled.

Always use properly guarded presses or bearing pullers to remove bearings from shafts, and always use suitable personal protective equipment, including safety glasses.

For additional Timken product warnings, visit www.timken.com/warnings.

CAUTION

Failure to observe the following cautions could result in property damage.

The products cataloged are application specific. Any use in applications other than those intended could lead to equipment failure or to reduced equipment life.

Use of improper bearing fits may cause damage to equipment.

Do not use damaged mounted bearings.

Do not use damaged bearings. The use of a damaged bearing can result in equipment damage.

NOTE

Do not use excessive force when mounting or dismounting the unit.

Follow all tolerance, fit, and torque recommendations.

Always follow the Original Equipment Manufacturer's installation and maintenance guidelines.

Ensure proper alignment.

Never weld mounted units.

Do not heat components with an open flame.

Do not operate at bearing temperatures above 121° C (250° F).

DISCLAIMER

This catalog is provided solely to give you analysis tools and data to assist you in your product selection. Product performance is affected by many factors beyond the control of Timken. Therefore, you must validate the suitability and feasibility of all product selections.

Timken products are sold subject to Timken terms and conditions of sale, which include our limited warranty and remedy. You can find these at https://www.timken.com/legal-notices/termsandconditionsofsale/.

Please consult with your Timken engineer for more information and assistance. Every reasonable effort has been made to ensure the accuracy of the information in this writing, but no liability is accepted for errors, omissions or for any other reason.

HOW TO IDENTIFY ASSEMBLY AND PART NUMBERS

BEARING ASSEMBLY NUMBERS 12

STANDARD PART NUMBERS 13

Standard Parts for Timken AP Bearings 13

HOW TO IDENTIFY ASSEMBLY AND PART NUMBERS

BEARING ASSEMBLY NUMBERS

In order to facilitate the identity of groups of parts, a "bearing assembly number" system is used. AP bearings are each assigned a five digit numeric code that follows the cone part number to describe the individual component parts, prelubrication, performance codes, and internal clearance of the pre-set assembly. In some cases the code may be alphanumeric, although the first digit is always "9".

For new applications, an assembly number is assigned on receipt of the first order. It is very important for the correct fitting and functioning of the bearing that the same assembly number is quoted for all subsequent replacement orders for that specific bearing position. Standard and supplemental assembly numbers are listed in this catalog starting on page 52.

Timken should be consulted if additional information is needed on any combination of parts or if questions arise about the correct assembly number for a specific application.

The assembly, HM120848 90012, shown in Fig. 2 identifies an assembly consisting of:

2 - HM120848 cones

1 - HM120817XD cup

1 - HM120848XA cone spacer
(fitted for normal internal clearance)

2 - K86890 seal wear rings

2 - K86895 seal assemblies

1 - K86874-90010 backing ring assembly consisting of:
1 - K86874 backing ring
1 - K89716 vent fitting

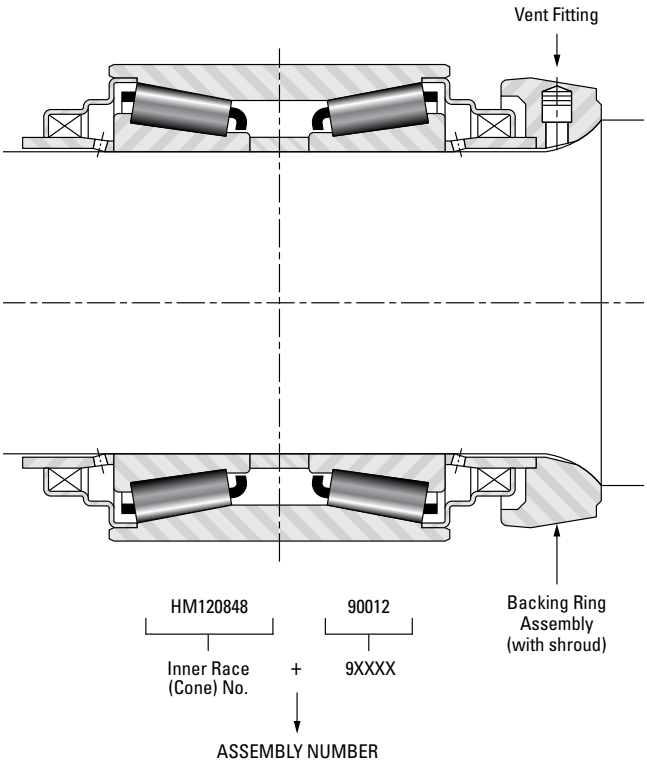

Fig. 2 Typical AP bearing assembly

STANDARD PART NUMBERS

STANDARD PARTS FOR TIMKEN AP BEARINGS

Class	Inner Race (Cone)	Outer Race (Cup)	Cone Spacer	Seal Wear Ring	Seal Assembly	Backing Ring		
						With Shroud	Without Shroud	Vent
B (4 ¼ x 8)	HM120848	HM120817XD	HM120848XA	K86890	K86895	K86874	K127203	K89716
C (5 x 9)	HM124646	HM124618XD	HM124646XA	K86002	K85600	K85588	K127204	K89716
D (5 ½ x 10)	HM127446	HM127415XD	HM127446XA	K85507	K86860	K85525	K127205	K89716
E (6 x 11)	HM129848	HM129814XD	HM129848XA	K85508	K86861	K85095	K127206	K89716
F (6 ½ x 12)	HM133444	HM133416XD	HM133444XA	K85509	K85520	K85516	K125685	K89716
G (7 x 12)	HM136948	HM136916XD	HM136948XA	K147767	K96501	–	K153497	K89716
G (7 x 14)	HM136948	HM136916XD	HM136948XA	K147767	K96501	K95200	–	K89716
GG (7)	H337846	H337816XD	H337846XA	K147767	K99424	–	K153497	K89716
K (8)	M241547	M241513XD	M241547XA	K504074	K504073	–	–	–

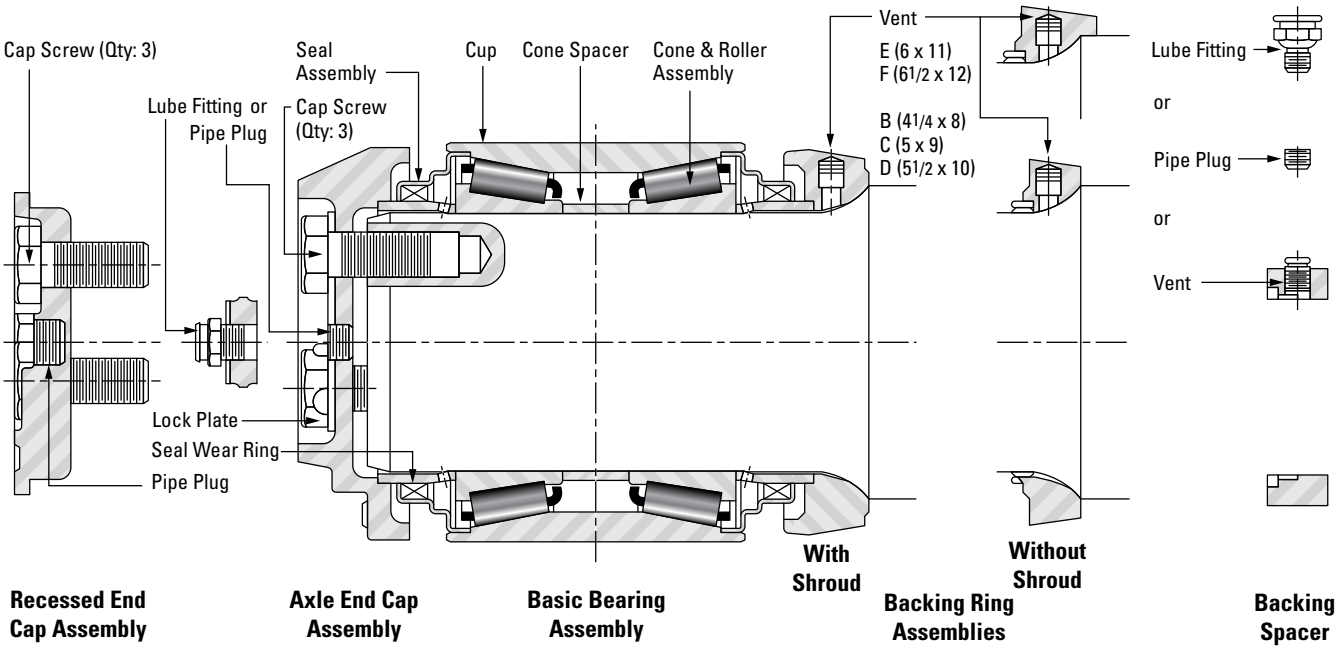

Class	Backing Spacer				Axle End Cap					Recessed End Cap			Adapter (1)	
	Backing Spacer	Vent	Pipe Plug	Lube Fitting	Axle End Cap	Lock Plate	Cap Screw	Lube Fitting	Pipe Plug	Re-cessed End Cap	Cap Screw	Pipe Plug	Narrow	Wide
B (4 ¼ x 8)	K118891	K83093	K46462	K78880	K86877	K84326	K53399	K399065	K86891	K399069	K344077	K75801	K86888	K87124
C (5 x 9)	K120198	K83093	K46462	K78880	K86003	K84325	K44434	K399065	K86891	K399070	K344077	K75801	K85581	K86019
D (5 ½ x 10)	K120178	K83093	K46462	K78880	K85521	K80511	K44434	K49022	K75801	K399071	K33003	K75801	K85530	K85526
E (6 x 11)	K120190	K83093	K46462	K78880	K85510	K80596	K84354	K49022	K75801	K399072	K74600	K75801	K85073	K85513
F (6 ½ x 12)	K120160	K83093	K46462	K78880	K85517	K84324	K84351	K49022	K75801	K399073	K74600	K75801	K85524	K85531
G (7 x 12)	K118866	K83093	K46462	K78880	K95199	K84701	K84398	K49022	K75801	K399074	K74588	K75801	K83138	–
G (7 x 14)	K118866	K83093	K46462	K78880	K412057	K84701	K84398	K49022	K75801	K399074	K74588	K75801	K83138	–
GG (7)	K118866	K83093	K46462	K78880	–	K84701	K462063	K49022	K75801	K399074	K74588	K75801	–	–
K (8)	–	–	–	–	–	–	–	–	–	K504075	K74588	K75801	K522803	–

(1) Not shown.

MOUNTING DESIGNS

TYPICAL APPLICATIONS 16

CRANE BRIDGE AND TROLLEY AXLE 17

MOVEABLE STADIUM ROOF 19

NARROW ADAPTER MOUNTING 19

TABLE ROLLS 20
Line Shaft Drive Full Bore Housing 20
Ram Roller - Adapter Mounting 20

CONTINUOUS CASTING MACHINE GUIDE ROLLERS AND RUNOUT TABLES 21

ELEVATOR SHEAVES 22

INGOT CARS 23

COIL TRANSFER CARS 24

SINTERING CAR WHEELS 25

COAL CRUSHERS 25

WOOD PULP BEATER SPINDLES 26

FURNACE WHEELS 26

TYPICAL APPLICATIONS

Listed below are some of the various applications on which AP bearings are presently being used. Photographs and/or line drawings of some of these designs are shown on the following pages.

- Apron Feeders
- Auto Shredders
- Band Saws
- Barking Drums – Thrust Rollers
- Billet Ejectors
- Bucket Unloaders
- Calender Rolls
- Cam Rollers
- Cars
  - Billet Grinder Cars
  - Cable Cars
  - Cane Cars
  - Charging Box Cars
  - Coke Guide Cars
  - Coke Quench Cars
  - Coke Screening Cars
  - Furnace Cars
  - Furnace Heat Shield Cars
  - Hot Metal Cars
  - Ingot Cars
  - Ingot Transfer Cars
  - Ladle Transfer Cars
  - Larry Cars
  - Loop Cars
  - Manipulator Cars
  - Ore Transfer Cars
  - Orienter Cars
  - Scale Cars
  - Scrap Charging Cars
  - Sheet Piler Cars
  - Shot Blast Cars
  - Sintering Pallet Cars
  - Skip Cars
  - Slab Return Cars
  - Slag Pot Cars
  - Transfer Cars
  - Transformer Cars
  - Tundish Cars
  - Weight Cars
  - Work roll Changer Cars
  - X-Ray Cars
- Chippers
- Choppers – Land Clearing
- Clay Gun Carriages
- Coal Crushing Machines
  - Breaker Shafts
  - Conveyor Drums
  - Eccentric Shafts
- Coal Pulverizers
- Compactor Presses
  - Backshafts
  - Flywheels
- Continuous Casters
  - Apron Guide Rollers
  - Runout Table Rolls
  - Cut Off Conveyors
- Continuous Miner Drives
  - Cutter Heads
  - Trackwheel Sprockets
- Conveyors
  - Head and Tail Drums
- Cranes
  - Bridge Wheels
  - Trolley Wheels
  - Drum Supports
- Davit – Anchors
- Digesters
- Docks – Loaders and Unloaders
- Draglines
- Drum Hoists
- Dynamometers
- Feeders
- Film Evaporators
- Flanging Machines
- Furnaces
  - Roof Swing Guides
  - Walking Beam Wheels
  - Rotary
- Gearless Elevators
- Grate Bar Rappers
- House Moving Dollies
- Jaw Crushers
- Laminators
- Levellers
- Line Shafts
- Line Tension Drums
- Locomotives
- Locomotive Cranes
- Log Rolls
- Missile Transporters
- Mobile Chargers
- Moveable Stadium Roofs
- Muckers
- Paper Mill Rolls
- Paper Reelers
- Pig Casting Machines
- Pillow Blocks
- Pinch Rolls
- Plate Benders
- Presses
  - Back Shafts
  - Fly Wheels
- Press Rolls
- Pulp Beaters
- Pumping Units
  - Saddles
  - Equalizers
- Radiation Chamber Doors
- Ram Rollers
- Reeler Bars
- Rod Mill Roll Necks
- Rotary Wheels
- Saw Mill Carriages
- Shears
- Sheaves
  - Elevators
  - Fairleads
  - Hoistings
  - Idlers
  - Mine Heads
- Ski Lifts
- Slab Extractors
- Soaking Pit Covers
- Stackers
  - Axles
  - Conveyor Drums
  - Hopper Cars
  - Triple Cables
- Table Rolls
  - Bar Mills
  - Billet Mills
  - Blooming Mills
  - Furnace Feeds
  - Merchant Mills
  - Pipe Conveyor
  - Rod Mills
  - Slab Mills
  - Strip Mills
  - Structural Mills
- Table Roll Line Shafts
- Target Transporters
- Temper Mill 2 Stands
- Trunnion Rollers
  - Barking Drums
  - Copper Converters
  - Dryers
  - Kilns
  - Scrubbers
  - Turntables
- Water Purification Drums
- Welding Positioners
- Wire Spool Support Heads

CRANE BRIDGE AND TROLLEY AXLE

This illustrates a typical AP bearing mounting for crane bridge and trolley axle using recessed end cap. This clamped wheel design is shown on a drive axle. The idler axle design is similar except both bearings are clamped in the same manner as the left-hand assembly shown in Fig. 3.

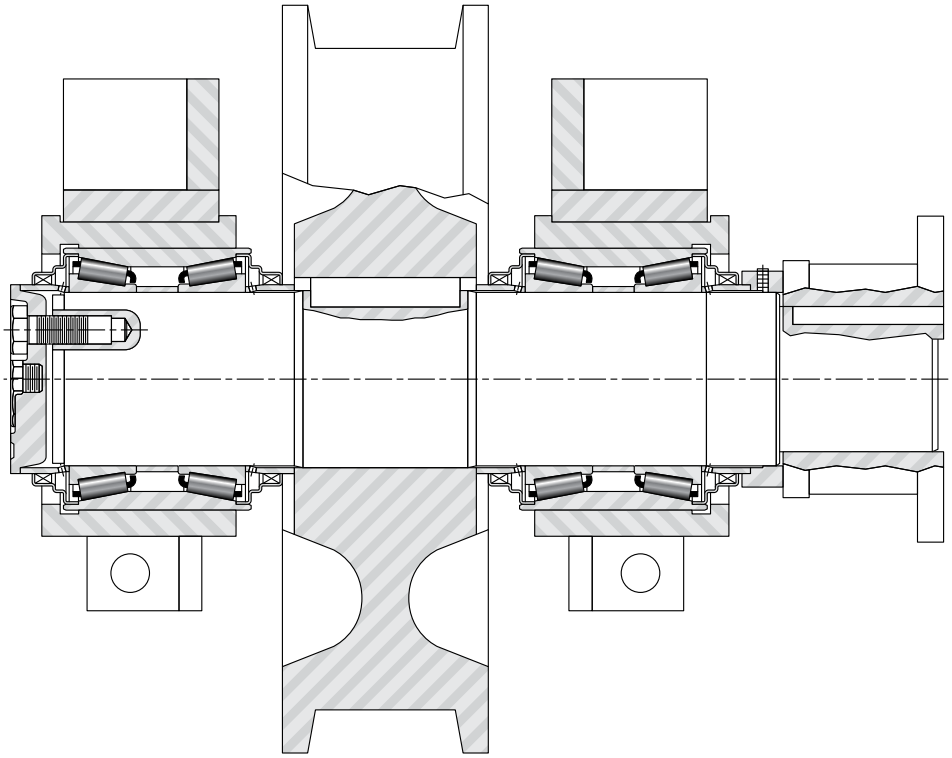

Fig. 3 Cross section of AP bearing on a drive axle

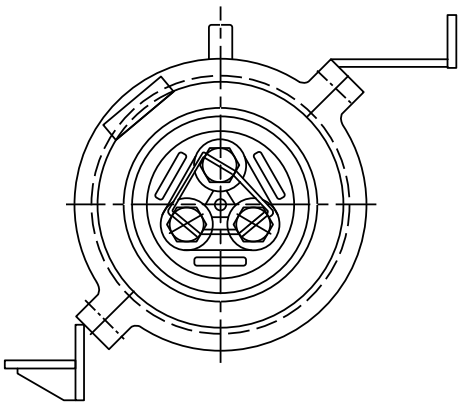

Fig. 4a

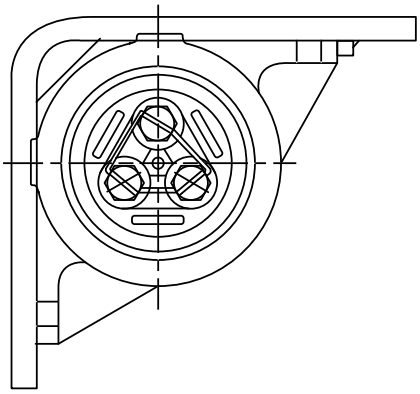

Fig. 4b

Typical full bore housing designs for crane wheel applications

CRANE BRIDGE AND TROLLEY AXLE

The crane bridge and trolley axle photos below illustrate an example of a standard and recessed end cap.

Fig. 5 Standard end cap design

Fig. 6 Trolley utilizing AP bearings with recessed end cap for wheel and drum drive

MOVEABLE STADIUM ROOF

Fig. 7 The Toronto Blue Jays Stadium uses Timken bearings in the moveable stadium roof

NARROW ADAPTER MOUNTING

Fig. 8 Narrow adapter mounting on trolley safety bar

TABLE ROLLS

LINE SHAFT DRIVE FULL BORE HOUSING

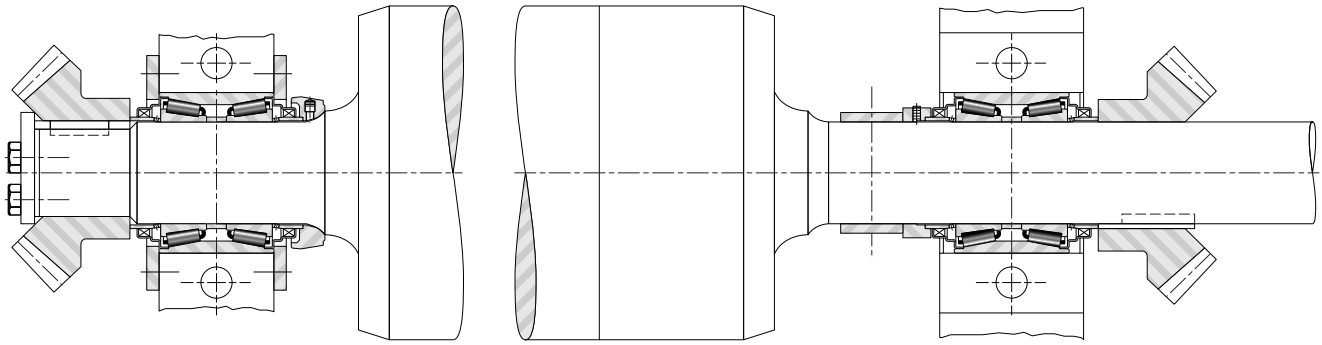

Fig. 9a Fixed side

Fig. 9b Float side

RAM ROLLER - ADAPTER MOUNTING

Fig. 10 A standard narrow adapter is used at both positions to ensure positive radial location of the AP bearing cups. A close clearance is provided between thrust lugs and the sides of the adapters to keep axial movement of the roll to a minimum.

CONTINUOUS CASTING MACHINE GUIDE ROLLERS AND RUNOUT TABLES

Used on both original and conversion guide roller applications, AP bearings provide a low maintenance, economical mounting arrangement.

Close tolerance adapters are used in the lower design. Caster AP bearings are available with or without a narrow adapter or solid housing.

Fig. 11 AP bearing equipped runout tables

PILLOW BLOCK

Greasing systems may not be required with the prelubricated AP bearing used in certain pillow block applications. Contact your Timken service representative for more information.

Fig. 12 AP bearings used in pillow block application

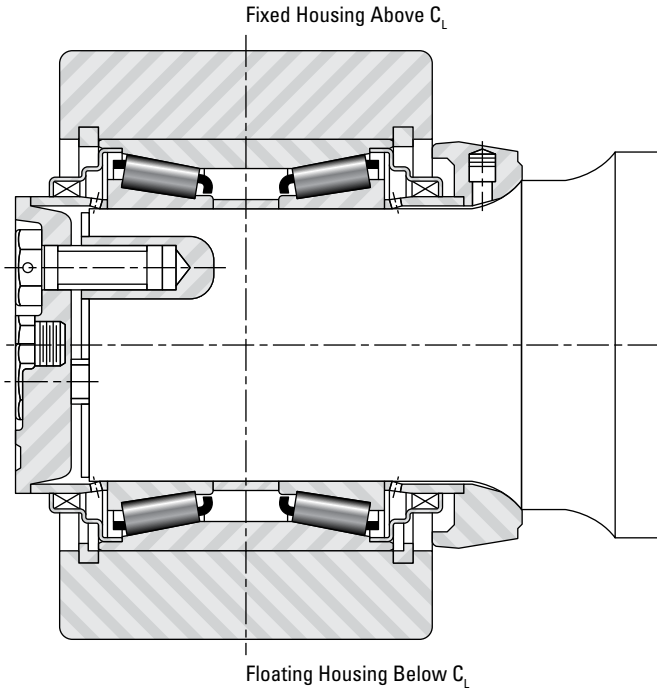

Fig. 13 Cross section of AP bearing in housing

ELEVATOR SHEAVES

The cup of this AP bearing is mounted directly into the sheave hub with a tight fit. Snap rings are required because of elevator safety regulations.

No provision for relubrication is made in this application. Some builders prefer to completely fill the bearing with grease at assembly while others depend on the initial charge of grease as supplied in a new bearing. Either practice is satisfactory for this specific application.

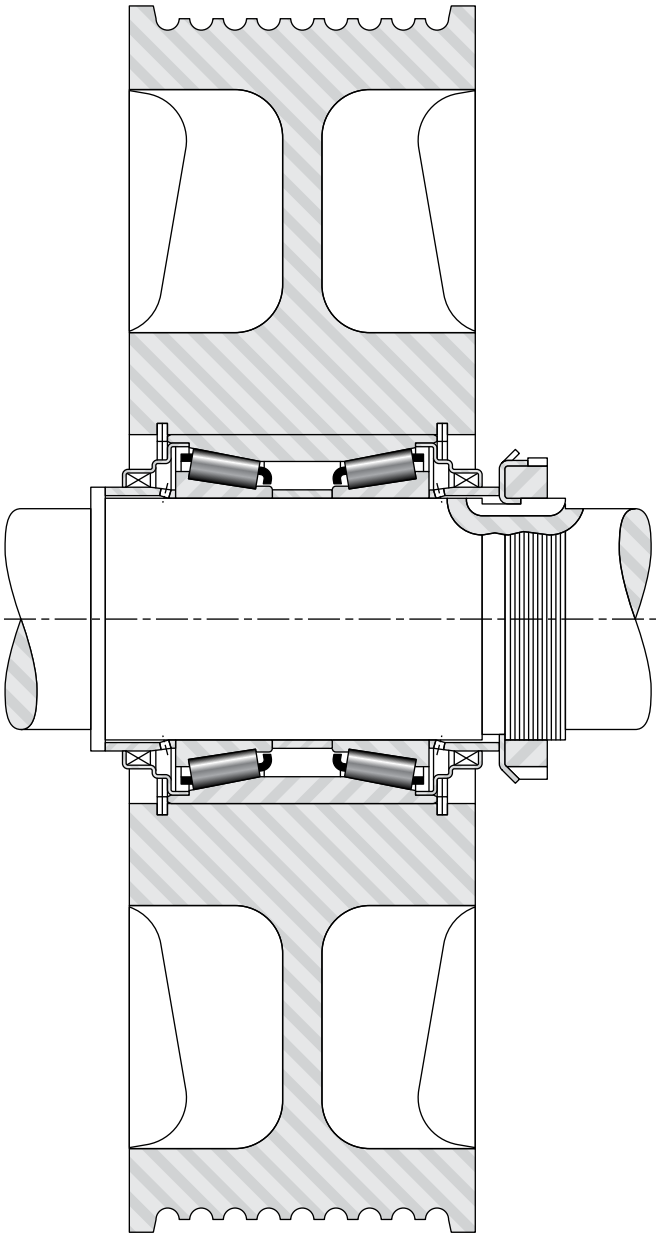

Fig. 14 Section view of elevator sheave

Fig. 15 AP bearings shown on typical elevator sheave application

INGOT CARS

Thousands of AP bearing-equipped ingot cars in various capacity ratings are in service in steel plants around the world.

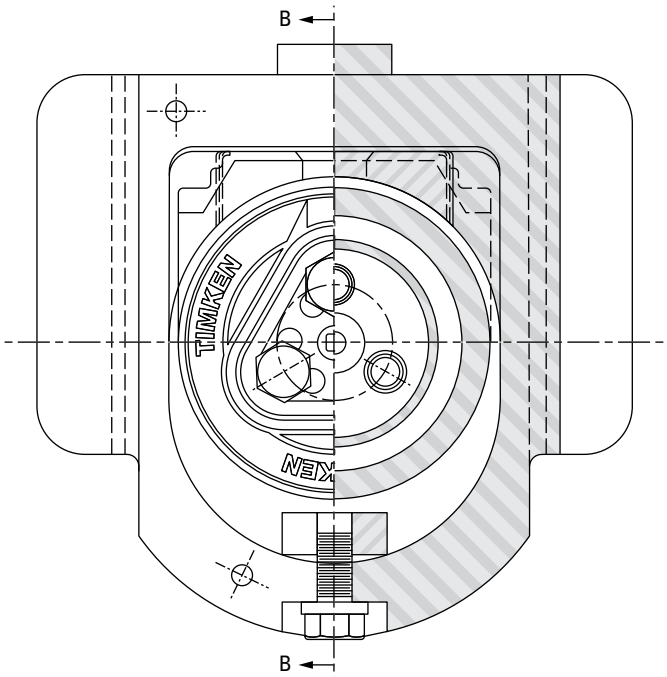

Half Front View (Cover removed)

Half Section A-A

Section B-B

Fig. 16 Cross section of AP bearing in ingot car

Fig. 17 Bottom pour ingot car equipped with Timken AP bearings

COIL TRANSFER CARS

Fig. 18 Coil transfer car equipped with AP bearings on axles

The cones in this inboard design are clamped on the shaft by the press fit of the wheel hub.

The adapter is mounted in a cast side frame and is restricted from axial movement as shown in Section C-C of Fig. 19.

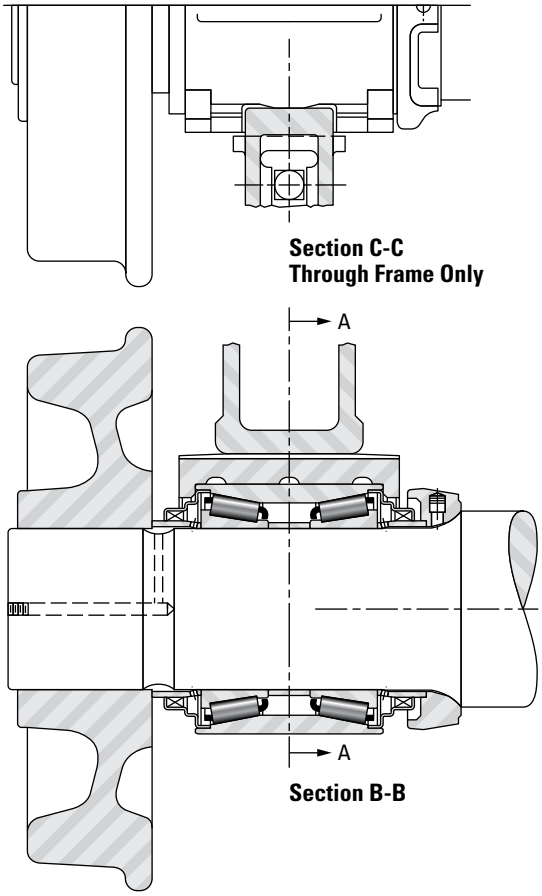

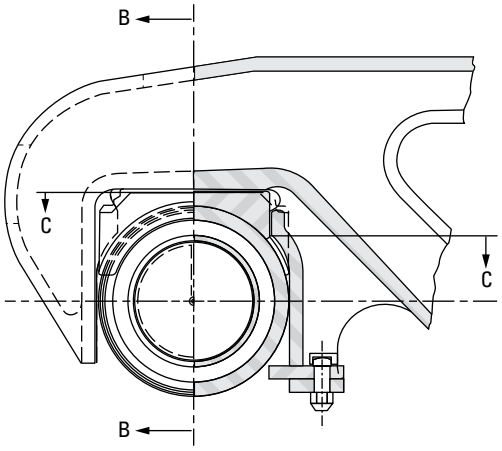

Half Front View (Wheel Removed) **Half Section A-A**

Fig. 19 Mounted adapter

SINTERING CAR WHEEL

This application illustrates the effectiveness of the AP bearing seals in excluding the abrasive material from the bearing elements.

Fig. 20 Coke transfer car equipped with AP bearings

COAL CRUSHER

AP bearings are used on the breaker shaft as well as in the conveyor drive head and tail drums of this coal crusher (Fig. 21a and Fig. 21b).

Fig. 21a Coal crusher shaft

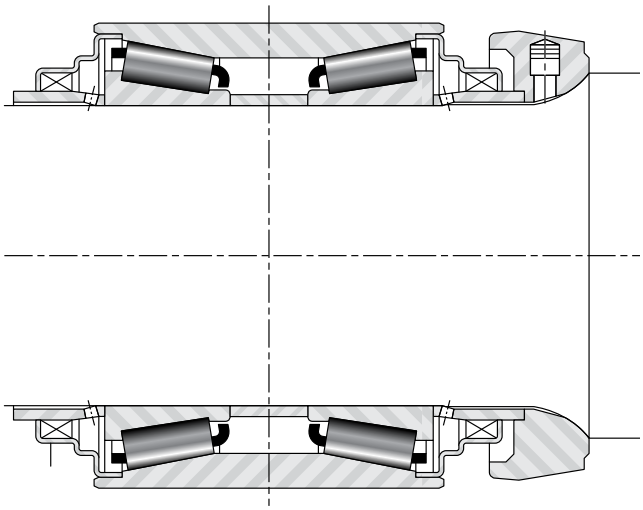

Fig. 21b Cross section of AP bearing in coal crusher

WOOD PULP BEATER SPINDLE

This beater spindle uses all standard parts of the AP bearing unit with exception of the special housing (Fig. 22a and Fig. 22b). A clearance can be provided between the faces of the cup and housing shoulders to provide axial float as required. Note that this design uses a split housing.

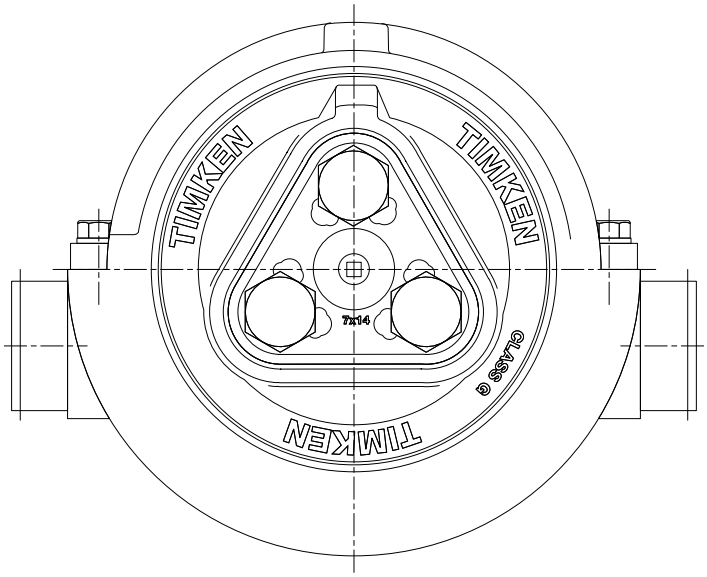

Fig. 22a Wood pulp beater spindle

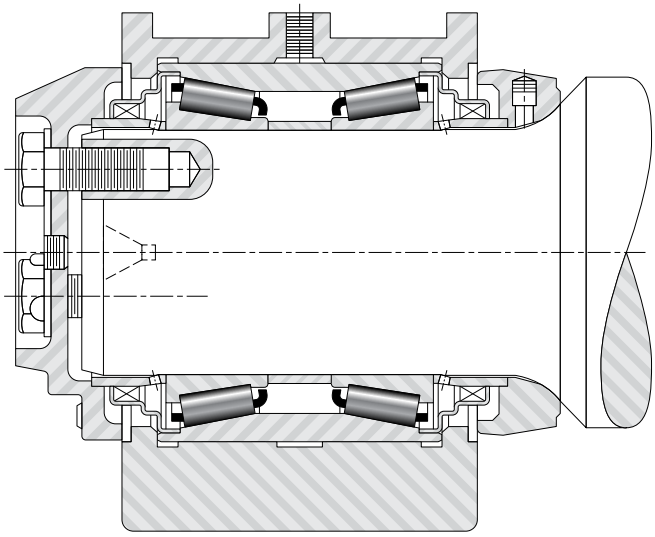

Fig. 22b Cross section of wood pulp beater spindle

FURNACE WHEEL

This design takes advantage of the "package" portion of the AP bearing–seal wear ring to seal wear ring. The use of both the adapter and backing ring is eliminated. The end cap is applied after insertion of a special spacer backing against the seal wear ring to clamp up the bearing assembly (Fig. 23).

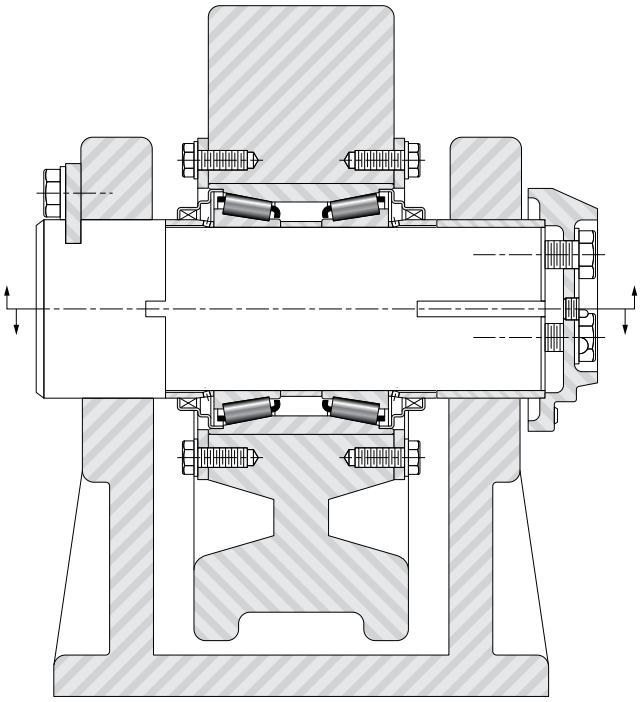

Fig. 23 Furnace wheel

TECHNICAL SUPPORT

SHAFT/AXLE DETAILS 28
Full Bore Housing Dimensions 29

ADAPTERS AND MOUNTING DESIGNS 30
Mounting Dimensions for Narrow Adapter 30
Auxiliary Parts Detail Dimensions 32
Industrial Equipment – Fitting Practice
For AP Bearings (Millimeters) 35
Industrial Equipment – Fitting Practice
For AP Bearings (Inches) 35
Press Fit Force Required to Apply Collars, Gears,
or Couplings Used to Retain an AP Bearing 36
Shaft Stress Calculation for Cars and Rolling Stock 36

BEARING LIFE EQUATIONS 37
Basic AP Bearing Dimensions and Ratings 37

ASSEMBLY AND DISASSEMBLY 38
Bearing Installation 38
Pressing Bearing Assemblies on Shafts 38
Applying the Axle End Cap 39
Equipment For Bearing Installation and Removal 40

SIMPLIFIED INSTALLATION OF AP BEARINGS
FOR INDUSTRIAL EQUIPMENT 42
Installation Methods 42
Hydraulic Ram Method 42
Threaded Rod and Nut Method 42
Tooling 43
Comparison of Methods 43
Bearing Removal (Axle) 44
Lubrication of AP Bearings 45
Grease Capacities of AP Bearings 45

SHAFT/AXLE DETAILS

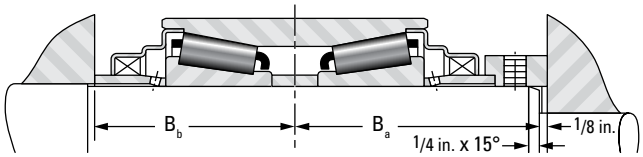

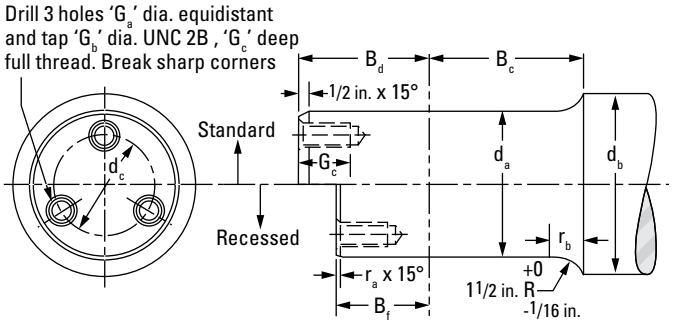

Class	d_a (1)	Backing Spacer		Backing Rings			
		B_a	B_b	d_b With Shroud	d_b Without Shroud	B_c	r_b
	mm in.	**mm** in.	**mm** in.	**mm** in.	**mm** in.	**mm** in.	**mm** in.
B (4 ¼ x 8)	**101.702-101.676** 4.0040-4.0030	**116.7** 4.59	**91.3** 3.59	**127.0** 5.00	**127.0** 5.00	**117.5** 4.62	**28.40** 1.118
C (5 x 9)	**119.164-119.138** 4.6915-4.6905	**134.1** 5.28	**108.7** 4.28	**149.2** 5.88	**149.2** 5.88	**134.9** 5.31	**30.35** 1.195
D (5 ½ x 10)	**131.864-131.838** 5.1915-5.1905	**138.9** 5.47	**113.5** 4.47	**161.9** 6.38	**161.9** 6.38	**139.7** 5.50	**30.35** 1.195
E (6 x 11)	**144.564-144.538** 5.6915-5.6905	**146.0** 5.75	**120.6** 4.75	**177.8** 7.00	**178.61-178.56** 7.032-7.030	**150.8** 5.94	**31.50** 1.240
F (6 ½ x 12)	**157.264-157.238** 6.1915-6.1905	**161.9** 6.38	**136.5** 5.38	**190.5** 7.50	**191.31-191.26** 7.532-7.530	**163.5** 6.44	**31.50** 1.240
G (7 x 12)	**177.902-177.876** 7.0040-7.0030	**160.3** 6.31	**134.9** 5.31	–	**203.25-203.20** 8.002-8.000	**150.8** 5.94	**28.40** 1.118
G (7 x 14)	**177.902-177.876** 7.0040-7.0030	**160.3** 6.31	**134.9** 5.31	**203.2** 8.00	–	**163.5** 6.44	**28.40** 1.118
GG (7)	**177.902-177.876** 7.0040-7.0030	**165.1** 6.50	**139.7** 5.50	–	**203.25-203.20** 8.002-8.000	**155.6** 6.12	**28.40** 1.118
K (8)	**203.327-203.301** 8.0050-8.0040	–	**108.0** 4.25	–	–	–	–

(1) For normal rotating shaft applications. For other conditions, see fitting practice tables on page 35

Class	Axle End Cap						Recessed End Cap						
	B_d	d_c	G_a	G_b	G_c	Torque	B_f	r_a	d_c	G_a	G_b	G_c	Torque
	mm in.	**mm** in.	**mm** in.	in. threads	**mm** in.	**N-m** lb-ft	**mm** in.	**mm** in.	**mm** in.	**mm** in.	in. threads	**mm** in.	**N-m** lb-ft
B (4 ¼ x 8)	**101.6** 4.00	**61.9** 2.44	**17** 0.656	¾ - 10	**41.3** 1.62	**149-163** 110-120	**68.3** 2.69	**6.4** 0.25	**60.3** 2.38	**13** 0.531	⅝ - 11	**38.1** 1.50	**149-163** 110-120
C (5 x 9)	**112.7** 4.44	**76.2** 3.00	**19** 0.766	⅞ - 9	**47.6** 1.88	**190-203** 140-150	**84.1** 3.31	**6.4** 0.25	**76.2** 3.00	**13** 0.531	⅝ - 11	**38.1** 1.50	**149-163** 110-120
D (5 ½ x 10)	**115.9** 4.56	**88.9** 3.50	**19** 0.766	⅞ - 9	**47.6** 1.88	**190-203** 140-150	**88.9** 3.50	**6.4** 0.25	**76.2** 3.00	**19** 0.766	⅞ - 9	**47.6** 1.88	**190-203** 140-150
E (6 x 11)	**127.0** 5.00	**98.4** 3.88	**22** 0.875	1-8	**50.8** 2.00	**339-366** 250-270	**92.1** 3.62	**6.4** 0.25	**82.6** 3.25	**22** 0.875	1-8	**50.8** 2.00	**339-366** 250-270
F (6 ½ x 12)	**134.9** 5.31	**108.0** 4.25	**25** 0.984	1 ⅛-7	**54.0** 2.12	**488-529** 360-390	**106.4** 4.19	**6.4** 0.25	**88.9** 3.50	**22** 0.875	1-8	**50.8** 2.00	**339-366** 250-270
G (7 x 12)	**130.2** 5.12	**117.5** 4.62	**28** 1.109	1 ¼-7	**57.2** 2.25	**583-624** 430-460	**103.2** 4.06	**4.8** 0.19	**101.6** 4.00	**25** 0.984	1 ⅛-7	**54.0** 2.12	**488-529** 360-390
G (7 x 14)	**130.2** 5.12	**117.5** 4.62	**28** 1.109	1 ¼-7	**57.2** 2.25	**583-624** 430-460	**103.2** 4.06	**4.8** 0.19	**101.6** 4.00	**25** 0.984	1 ⅛-7	**54.0** 2.12	**488-529** 360-390
GG (7)	**134.9** 5.31	**117.5** 4.62	**28** 1.109	1 ¼-7	**57.2** 2.25	**583-624** 430-460	**108.0** 4.25	**4.8** 0.19	**101.6** 4.00	**25** 0.984	1 ⅛-7	**54.0** 2.12	**488-529** 360-390
K (8)	–	–	–	–	–	–	**77.8** 3.06	**4.8** 0.19	**123.8** 4.88	**25** 0.984	1 ⅛-7	**54.0** 2.12	**488-529** 380-390

FULL BORE HOUSING DIMENSIONS

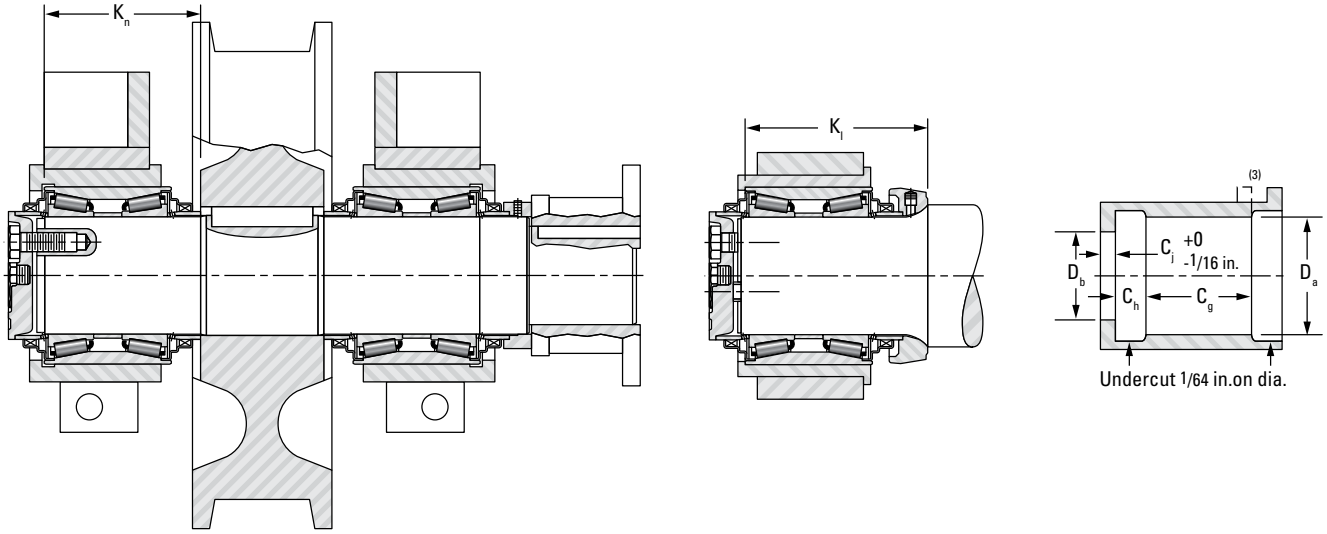

Class	C_g	C_h	C_j	D_a(1)	D_b	K_l(2) +1.02mm /+.040 in. -0	K_n(2) +0.76mm /+.030 in. -0
	mm in.	**mm** in.	**mm** in.	**mm** in.	**mm** in.	**mm** in.	**mm** in.
B (4 ¼ x 8)	**85.7** 3.38	**15.9** 0.62	**12.7** 0.50	**165.328 – 165.379** 6.5090 – 6.5110	**154.0** 6.06	**174.231** 6.8595	**148.044** 5.8285
C (5 x 9)	**114.3** 4.50	**15.9** 0.62	**12.7** 0.50	**195.490 – 195.541** 7.6965 – 7.6985	**182.6** 7.19	**205.994** 8.1100	**179.807** 7.0790
D (5 ½ x 10)	**123.8** 4.88	**15.9** 0.62	**12.7** 0.50	**208.190 – 208.241** 8.1965 – 8.1985	**196.8** 7.75	**215.544** 8.4860	**189.357** 7.4550
E (6 x 11)	**133.4** 5.25	**15.9** 0.62	**14.3** 0.56	**220.890 – 220.941** 8.6965 – 8.6985	**209.6** 8.25	**232.212** 9.1422	**202.062** 7.9552
F (6 ½ x 12)	**152.4** 6.00	**19.0** 0.75	**14.3** 0.56	**252.640 – 252.691** 9.9465 – 9.9485	**238.1** 9.38	**255.270** 10.0500	**228.270** 8.9870
G (7 x 12)	**152.4** 6.00	**19.0** 0.75	**14.3** 0.56	**276.453 – 276.504** 10.8840 –10.8860	**261.1** 10.28	**243.177** 9.5739	–
G (7 x 14)						**256.045** 10.0805	**227.470** 8.9555
GG (7)	**155.6** 6.12	– (4)	**14.3** 0.56	**301.853 – 301.904** 11.8840 – 11.8860	**284.2** 11.19	**253.469** 9.9791	**237.762** 9.3607
K (8)	**98.4** 3.88	– (4)	**14.3** 0.56	**301.777 – 301.828** 11.8810 – 11.8830	**284.2** 11.19	–	**177.820** 7.0008

(1) See page 35 for fitting practice information.
(2) Bearing width dimensions.
(3) Outer undercut can be eliminated if housing is shortened to end of the "Cg" dimension.
(4) Relief machined on cup O.D.; housing undercut not required.

NOTE: Full bore housings are not furnished by Timken.

ADAPTERS AND MOUNTING DESIGNS

MOUNTING DIMENSIONS FOR NARROW ADAPTER

1. Thrust lugs could be welded or machined into opening.

2. Class G and K adapter do not require thrust lugs.

3. Provide shim to give 0.25 mm to 0.38 mm (.010 in. to .015 in.) clearance between tie plate and cup O.D. If cup turning in the adapter should occur a resilient pad may be used between the tie plate and the cup O.D. to lightly hold the cup from turning.

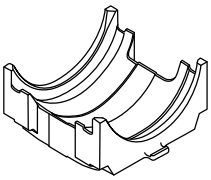

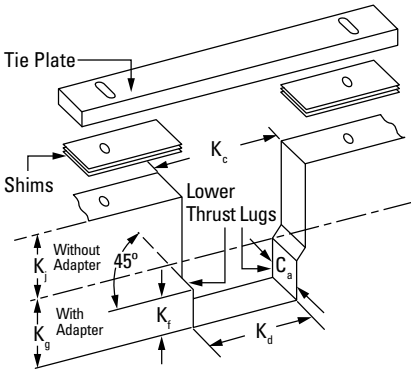

Bearing Class and Narrow Adapter Part Number	K_c **1mm** +1/32 in. -0	K_d **1mm** +1/32 in. -0	K_f	K_g	K_h [1]	K_j	K_k [1]	C_a **1mm** +1/32 in. -0		C_b [1]	C_c [1]
								Fixed	Float		
mm in.	**mm** in.	**mm** in.	**mm** in.	**mm** in.	**mm** in.	**mm** in.	**mm** in.	**mm** in.	**mm** in.	**mm** in.	**mm** in.
B (4 ¼ x 8) K86888	**169.9** 6.69	**125.4** 4.94	**36.5** 1.44	**101.6** 4.00	**85.7** 3.38	**82.6** 3.25	**124.6** 4.91	**68.3** 2.69	**60.3** 2.38	**68.3** 2.69	**117.5** 4.62
C (5 x 9) K85581	**200.0** 7.88	**144.5** 5.69	**42.9** 1.69	**117.5** 4.62	**100.8** 3.97	**97.6** 3.84	**143.7** 5.66	**74.6** 2.94	**66.7** 2.62	**74.6** 2.94	**146.0** 5.75
D (5 ½ x 10) K85530	**212.7** 8.38	**157.2** 6.19	**46.0** 1.81	**123.8** 4.88	**107.2** 4.22	**104.0** 4.09	**156.4** 6.16	**74.6** 2.94	**66.7** 2.62	**74.6** 2.94	**155.6** 6.12
E (6 x 11) K85073	**225.4** 8.88	**182.6** 7.19	**58.7** 2.31	**136.5** 5.38	**113.5** 4.47	**110.3** 4.34	**181.8** 7.16	**96.8** 3.81	**88.9** 3.50	**96.8** 3.81	**166.7** 6.56
F (6 ½ x 12) K85524	**257.2** 10.12	**195.3** 7.69	**60.3** 2.38	**152.4** 6.00	**129.4** 5.09	**126.2** 4.97	**194.5** 7.66	**96.8** 3.81	**88.9** 3.50	**96.8** 3.81	**187.3** 7.38
G (7 x 12) G (7 x 14) K83138	**281.0** 11.06	–	–	**168.3** 6.62	**141.3** 5.56	**138.1** 5.44	**279.4** 11.00	**181.0** 7.12	**171.4** 6.75	**181.0** 7.12	**189.7** 7.47
K (8) K522803	**306.4** 12.06	–	–	**196.8** 7.75	**154.0** 6.06	**150.8** 5.94	**304.8** 12.00	**142.9** 5.62	**133.4** 5.25	**142.9** 5.62	**142.9** 5.62

[1] See page 31 for K_h, K_k, C_b and C_c dimensions.

Class B, Class C, Class D, Class E, and Class F Narrow Adapter

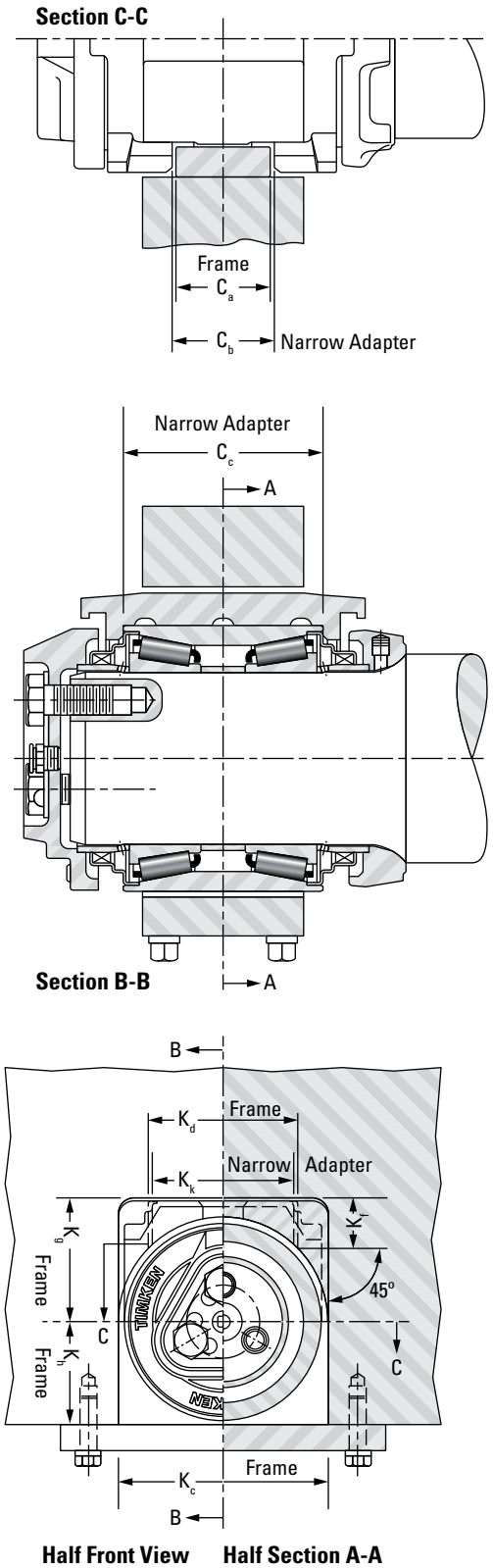

Fig. 24

Class G and Class K Narrow Adapter

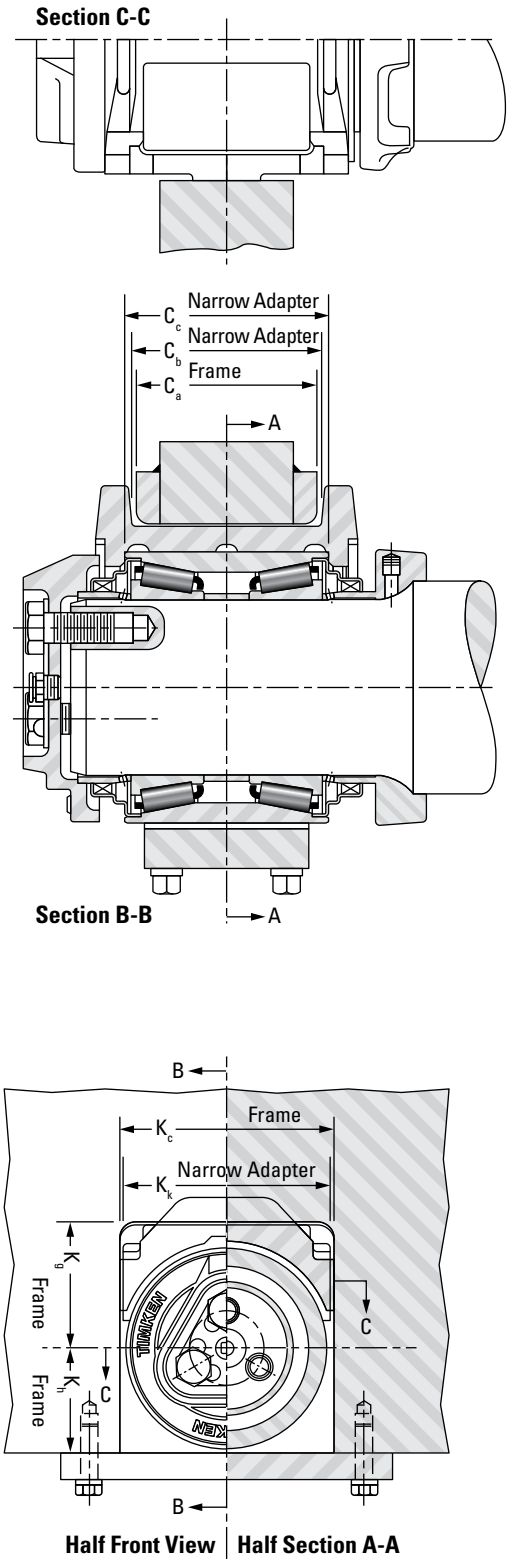

Fig. 25

AUXILIARY PARTS DETAIL DIMENSIONS

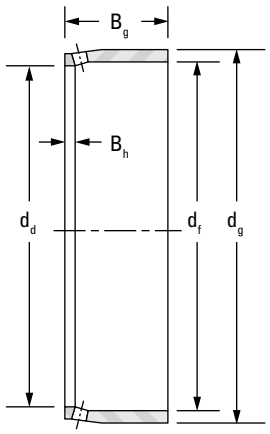

Seal Wear Ring

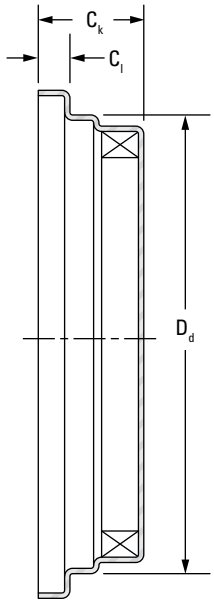

Seal Case

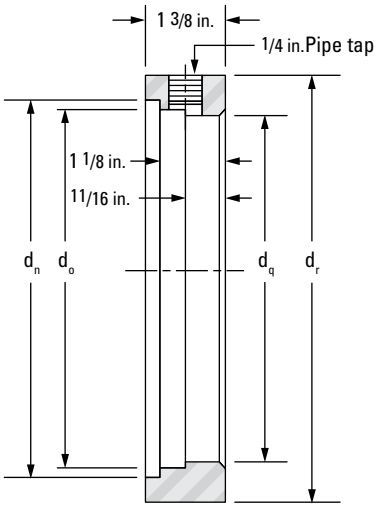

Backing Spacer

Class	Seal Wear Ring						Seal Case				Backing Spacer				
	Part Number	d_d	d_f	d_g **+0.05 mm** +0.002 in. **+0.00 mm** +0.000 in.	B_g	B_h	Part Number	D_d	C_k	C_l	Part Number	d_n **+0.13 mm** +0.005 in. **+0.00 mm** +0.000 in.	d_o	d_q **+0.05 mm** +0.002 in. **+0.00 mm** +0.000 in.	d_r
		mm in.	**mm** in.	**mm** in.	**mm** in.	**mm** in.		**mm** in.	**mm** in.	**mm** in.		**mm** in.	**mm** in.	**mm** in.	**mm** in.
B (4 ¼ x 8)	K86890	**101.600** 4.0000	**104.8** 4.12	**112.70** 4.437	**37.85** 1.490	**4.78** 0.188	K86895	**141.66** 5.577	**38.10** 1.500	**12.57** 0.495	K118891	**113.64** 4.474	**104.65** 4.120	**101.676** 4.0030	**133.4** 5.25
C (5 x 9)	K86002	**119.045** 4.6868	**122.2** 4.81	**131.75** 5.187	**40.23** 1.584	**5.56** 0.219	K85600	**164.95** 6.494	**40.87** 1.609	**12.37** 0.487	K120198	**132.69** 5.224	**122.10** 4.807	**119.139** 4.6905	**152.4** 6.00
D (5 ½ x 10)	K85507	**131.732** 5.1863	**134.9** 5.31	**144.45** 5.687	**40.23** 1.584	**5.56** 0.219	K86860	**177.65** 6.994	**40.87** 1.609	**12.37** 0.487	K120178	**145.39** 5.724	**134.80** 5.307	**131.839** 5.1905	**165.1** 6.50
E (6 x 11)	K85508	**144.419** 5.6858	**147.6** 5.81	**157.15** 6.187	**42.62** 1.678	**6.35** 0.250	K86861	**188.77** 7.432	**41.63** 1.639	**13.16** 0.518	K120190	**158.09** 6.224	**147.50** 5.807	**144.539** 5.6905	**177.8** 7.00
F (6 ½ x 12)	K85509	**157.107** 6.1853	**160.3** 6.31	**173.02** 6.812	**47.40** 1.866	**9.52** 0.375	K85520	**212.90** 8.382	**47.98** 1.889	**13.97** 0.550	K120160	**173.96** 6.849	**160.20** 6.307	**157.239** 6.1905	**190.5** 7.50
G (7 x 12)	K147767	**177.724** 6.9970	**181.0** 7.12	**195.25** 7.687	**44.22** 1.741	**6.35** 0.250	K96501	**239.88** 9.444	**46.81** 1.843	**14.17** 0.558	K118866	**196.19** 7.724	**180.85** 7.120	**177.876** 7.0030	**209.6** 8.25
G (7 x 14)	K147767	**177.724** 6.9970	**181.0** 7.12	**195.25** 7.687	**44.22** 1.741	**6.35** 0.250	K96501	**239.88** 9.444	**46.81** 1.843	**14.17** 0.558	K118866	**196.19** 7.724	**180.85** 7.120	**177.876** 7.0030	**209.6** 8.25
GG (7)	K147767	**177.724** 6.9970	**181.0** 7.12	**195.25** 7.687	**44.22** 1.741	**6.35** 0.250	K99424	**261.32** 10.288	**49.58** 1.952	**18.92** 0.745	K118866	**196.19** 7.724	**180.85** 7.120	**177.876** 7.0030	**209.6** 8.25
K (8)	K504074	**203.098** 7.9960	**206.4** 8.12	**219.08** 8.625	**45.24** 1.781	**7.95** 0.313	K504073	**261.32** 10.288	**49.58** 1.952	**18.92** 0.745	–	–	–	–	–

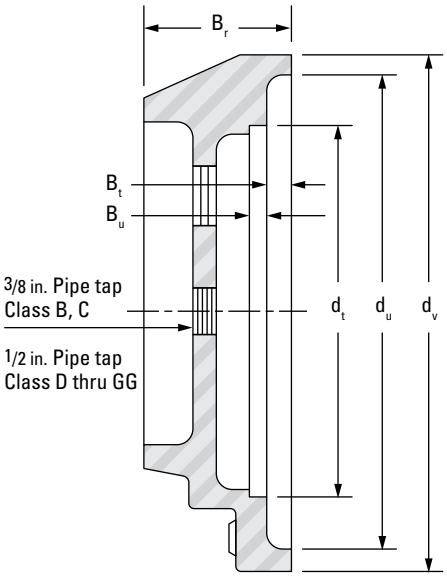

Axle End Cap

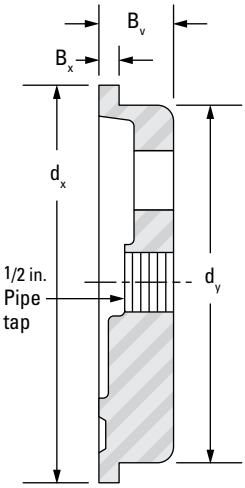

Recessed End Cap

Class	Axle End Cap											
	Part Number	d_t	d_u	d_v max	B_r	B_t	B_u	Part Number	d_x	d_y	B_v	B_x
		mm in.	**mm** in.	**mm** in.	**mm** in.	**mm** in.	**mm** in.		**mm** in.	**mm** in.	**mm** in.	**mm** in.
B (4 ¼ x 8)	K86877	**113.64** 4.474	**146.0** 5.75	**158.0** 6.22	**58.7** 2.31	**7.9** 0.31	**5.6** 0.22	K399069	**114.3** 4.50	**104.0** 4.09	**23.8** 0.94	**4.8** 0.19
C (5 x 9)	K86003	**132.69** 5.224	**173.0** 6.81	**188.1** 7.41	**57.2** 2.25	**11.1** 0.44	**5.5** 0.22	K399070	**133.4** 5.25	**121.4** 4.78	**25.4** 1.00	**4.8** 0.19
D (5 ½ x 10)	K85521	**145.39** 5.724	**185.7** 7.31	**200.8** 7.91	**55.6** 2.19	**11.1** 0.44	**5.6** 0.22	K399071	**146.0** 5.75	**134.1** 5.28	**27.0** 1.06	**6.4** 0.25
E (6 x 11)	K85510	**158.09** 6.224	**198.4** 7.81	**216.7** 8.53	**61.9** 2.44	**11.1** 0.44	**6.4** 0.25	K399072	**158.8** 6.25	**146.8** 5.78	**30.2** 1.19	**6.4** 0.25
F (6 ½ x 12)	K85517	**173.96** 6.849	**225.4** 8.88	**243.7** 9.59	**63.5** 2.50	**16.7** 0.66	**6.4** 0.25	K399073	**177.8** 7.00	**159.5** 6.28	**31.8** 1.25	**6.4** 0.25
G (7 x 12)	K95199	**196.19** 7.724	**250.8** 9.88	**269.9** 10.62	**57.2** 2.25	**11.1** 0.44	**5.6** 0.22	K399074	**196.8** 7.75	**180.2** 7.09	**33.3** 1.31	**6.4** 0.25
G (7 x 14)	K412057	**196.19** 7.724	**250.8** 9.88	**269.9** 10.62	**57.2** 2.25	**11.1** 0.44	**5.6** 0.22	K399074	**196.8** 7.75	**180.2** 7.09	**33.3** 1.31	**6.4** 0.25
GG (7)	–	**196.19** 7.724	**250.8** 9.88	**269.9** 10.62	**57.2** 2.25	**11.1** 0.44	**5.6** 0.22	K399074	**196.8** 7.75	**180.2** 7.09	**33.3** 1.31	**6.4** 0.25
K (8)	–	–	–	–	–	–	–	K504075	**222.2** 8.75	**205.6** 8.09	**34.9** 1.38	**11.9** 0.47

AUXILIARY PARTS DETAIL DIMENSIONS

Backing Rings With Shroud

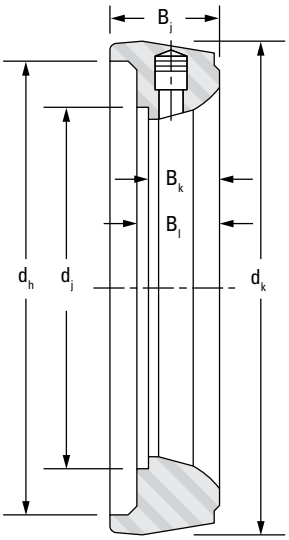

Class B, Class C, Class D, Class E, Class F, Class G (7 x 14)

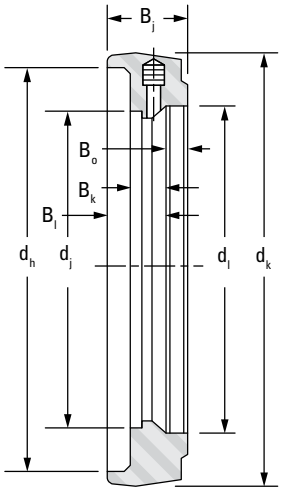

Class G (7 x 12) and Class GG (7)

Backing Rings Without Shroud

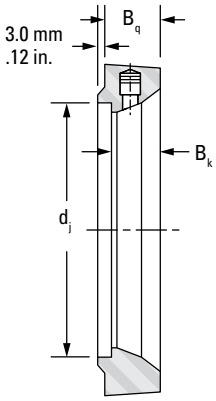

Class B, Class C, Class D

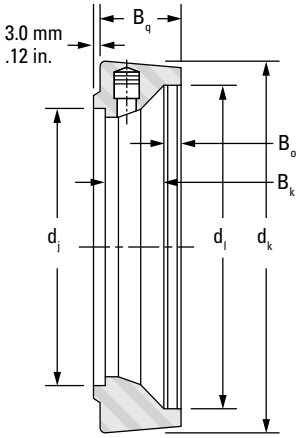

Class E, Class F, Class G

Class	Backing Rings															
	Backing Ring With Shroud									Backing Ring Without Shroud						
	Part Number	d_h	d_j	d_k max.	d_l **+0.15 mm** +0.006 in. **+0.00 mm** +0.000 in.	B_j	B_k	B_l	B_0	Part Number	d_j **+0.20 mm** +0.008 in. **+0.00 mm** +0.000 in.	d_k max.	d_l **+0.13 mm** +0.005 in. **+0.00 mm** +0.000 in.	B_k	B_0	B_q
		mm in.	**mm** in.	**mm** in.	**mm** in.	**mm** in.	**mm** in.	**mm** in.	**mm** in.		**mm** in.	**mm** in.	**mm** in.	**mm** in.	**mm** in.	**mm** in.
B (4 ¼ x 8)	K86874	**146.0** 5.75	**112.67**[2] 4.436	**157.2** 6.19	–	**39.7** 1.56	**26.19** 1.031	**31.8** 1.25	–	[1]	**112.67** 4.436	**153.2** 6.03	–	**26.19** 1.031	–	**28.6** 1.12
C (5 x 9)	K85588	**173.8** 6.84	**131.72**[2] 5.186	**187.3** 7.38	–	**42.9** 1.69	**26.19** 1.031	**31.8** 1.25	–	[1]	**131.72** 5.186	**176.2** 6.94	–	**26.19** 1.031	–	**28.6** 1.12
D (5 ½ x 10)	K85525	**185.7** 7.31	**144.42**[2] 5.686	**200.0** 7.88	–	**42.9** 1.69	**26.19** 1.031	**31.8** 1.25	–	K127205	**144.42** 5.686	**188.9** 7.44	–	**26.19** 1.031	–	**28.6** 1.12
E (6 x 11)	K85095	**199.2** 7.84	**157.12**[2] 6.186	**215.9** 8.50	–	**47.6** 1.88	**30.15** 1.187	**36.5** 1.44	–	K127206	**157.12** 6.186	**208.0** 8.19	**178.51** 7.028	**30.15** 1.187	**8.7** 0.34	**42.1** 1.66
F (6 ½ x 12)	K85516	**227.0** 8.94	**173.00**[2] 6.811	**242.9** 9.56	–	**50.0** 1.97	**27.00** 1.063	**33.3** 1.31	–	K125685	**173.00** 6.811	**220.7** 8.69	**191.21** 7.528	**27.00** 1.063	**8.7** 0.34	**38.9** 1.53
G (7 x 12) GG (7)	K147766	**250.8** 9.88	**195.22**[3] 7.686	**266.7** 10.50	**203.10** 7.996	**48.3** 1.90	**15.85** 0.624	–	**12.7** 0.50	K153497	**195.22** 7.686	**266.7** 10.50	**203.10** 7.996	–	**12.7** 0.50	**33.3** 1.31
G (7 x 14)	K95200	**250.8** 9.88	**195.22**[2] 7.686	**266.7** 10.50	–	**48.4** 1.91	**28.58** 1.125	**34.1** 1.34	–	–	–	–	–	–	–	–
K (8)	–	–	–	–	–	–	–	–	–	–	–	–	–	–	–	–

[1] Limited availability; consult your Timken representative.
[2] **0.00 to -0.13 mm** (0.000 in. to -0.005 in.)
[3] **0.00 to -0.20 mm** (0.000 in. to -0.008 in.)

INDUSTRIAL EQUIPMENT – FITTING PRACTICE FOR AP BEARINGS (MILLIMETERS)

Class	Bearing Part Number		Cone Fitting Practice						Cup Fitting Practice			
			Rotating Cone				Stationary Cone		Stationary Cup		Rotating Cup	
			Heavy Loads Moderate Speeds		Hot Applications, Table Rolls, Etc.							
	Cone	Cup	Cone Seat d_a	Resultant Fit	Cone Seat d_a	Resultant Fit	Cone Seat d_a	Resultant Fit	Cone Seat D_a	Resultant Fit	Cone Seat D_a	Resultant Fit
B (4 ¼ x 8)	HM120848	HM120817XD	101.702 101.676	0.102T 0.051T	101.676 101.650	0.076T 0.025T	101.575 101.549	0.025L 0.076L	165.328 165.379	0.102L 0.279L	165.100 165.125	0.102T 0.051T
C (5 x 9)	HM124646	HM124618XD	119.164 119.138	0.102T 0.051T	119.138 119.112	0.076T 0.025T	119.037 119.011	0.025L 0.076L	195.490 195.541	0.102L 0.279L	195.262 195.287	0.102T 0.051T
D (5 ½ x 10)	HM127446	HM127415XD	131.864 131.838	0.114T 0.064T	131.838 131.812	0.089T 0.038T	131.737 131.711	0.013L 0.064L	208.190 208.241	0.102L 0.279L	207.962 207.987	0.102T 0.051T
E (6 x 11)	HM129848	HM129814XD	144.564 144.538	0.114T 0.064T	144.538 144.512	0.089T 0.038T	144.437 144.411	0.013L 0.064L	220.890 220.941	0.102L 0.279L	220.662 220.687	0.102T 0.051T
F (6 ½ x 12)	HM133444	HM133416XD	157.264 157.238	0.114T 0.064T	157.238 157.212	0.089T 0.038T	157.137 157.111	0.013L 0.064L	252.640 252.691	0.102L 0.279L	252.412 252.437	0.102T 0.051T
G (7)	HM136948	HM136916XD	177.902 117.876	0.114T 0.064T	177.876 177.850	0.089T 0.038T	177.775 177.749	0.013L 0.064L	276.453 276.504	0.102L 0.279L	276.225 276.250	0.102T 0.051T
GG (7)	H337846	H337816XD	177.902 117.876	0.114T 0.064T	177.876 177.850	0.089T 0.038T	177.775 177.749	0.013L 0.064L	301.853 301.904	0.025L 0.127L	301.701 301.726	0.102T 0.051T
K (8)	M241547	M241513XD	203.327 203.302	0.127T 0.076T	203.302 203.276	0.102T 0.051T	203.175 203.149	0.025L 0.076L	301.777 301.828	0.025L 0.127L	301.625 301.650	0.102T 0.051T

NOTE: T = Tight; L = Loose
For tolerance information, contact your Timken representative.

INDUSTRIAL EQUIPMENT – FITTING PRACTICE FOR AP BEARINGS (INCHES)

Class	Bearing Part Number		Cone Fitting Practice						Cup Fitting Practice			
			Rotating Cone				Stationary Cone		Stationary Cup		Rotating Cup	
			Heavy Loads Moderate Speeds		Hot Applications, Table Rolls, Etc.							
	Cone	Cup	Cone Seat d_a	Resultant Fit	Cone Seat d_a	Resultant Fit	Cone Seat d_a	Resultant Fit	Cone Seat D_a	Resultant Fit	Cone Seat D_a	Resultant Fit
B (4 ¼ x 8)	HM120848	HM120817XD	4.0040 4.0030	0.0040T 0.0020T	4.0030 4.0020	0.0030T 0.0010T	3.9990 3.9980	0.0010L 0.0030L	6.5090 6.5110	0.0040L 0.0110L	6.5000 6.5010	0.0040T 0.0020T
C (5 x 9)	HM124646	HM124618XD	4.6915 4.6905	0.0040T 0.0020T	4.6905 4.6895	0.0030T 0.0010T	4.6865 4.6855	0.0010L 0.0030L	7.6965 7.6985	0.0040L 0.0110L	7.6875 7.6885	0.0040T 0.0020T
D (5 ½ x 10)	HM127446	HM127415XD	5.1915 5.1905	0.0045T 0.0025T	5.1905 5.1895	0.0035T 0.0015T	5.1865 5.1855	0.0005L 0.0025L	8.1965 8.1985	0.0040L 0.0110L	8.1875 8.1885	0.0040T 0.0020T
E (6 x 11)	HM129848	HM129814XD	5.6915 5.6905	0.0045T 0.0025T	5.6905 5.6895	0.0035T 0.0015T	5.6865 5.6855	0.0005L 0.0025L	8.6965 8.6985	0.0040L 0.0110L	8.6875 8.6885	0.0040T 0.0020T
F (6 ½ x 12)	HM133444	HM133416XD	6.1915 6.1905	0.0045T 0.0025T	6.1905 6.1895	0.0035T 0.0015T	6.1865 6.1855	0.0005L 0.0025L	9.9465 9.9485	0.0040L 0.0110L	9.9375 9.9385	0.0040T 0.0020T
G (7)	HM136948	HM136916XD	7.0040 7.0030	0.0045T 0.0025T	7.0030 7.0020	0.0035T 0.0015T	6.9990 6.9980	0.0005L 0.0025L	10.8840 10.8860	0.0040L 0.0110L	10.8750 10.8760	0.0040T 0.0020T
GG (7)	H337846	H337816XD	7.0040 7.0030	0.0045T 0.0025T	7.0030 7.0020	0.0035T 0.0015T	6.9990 6.9980	0.0005L 0.0025L	11.8840 11.8860	0.0010L 0.0050L	11.8780 11.8790	0.0050T 0.0020T
K (8)	M241547	M241513XD	8.0050 8.0040	0.0050T 0.0030T	8.0040 8.0030	0.0040T 0.0020T	7.9990 7.9980	0.0010L 0.0030L	11.8810 11.8830	0.0010L 0.0080L	11.8750 11.8760	0.0040T 0.0020T

NOTE: T = Tight; L = Loose
For tolerance information, contact your Timken representative.

PRESS FIT FORCE REQUIRED TO APPLY COLLARS, GEARS, OR COUPLINGS USED TO RETAIN AN AP BEARING

The clamping force resulting from a press fit is equal to:

$F = 1/2\,\pi\, f\, L\, \delta\, E\, [1-(b/c)^2]$

Where:

F = Clamping Force - newton (lb)

f = Coefficient of Friction = .17

L = Length of Clamping Part - meter (in.)

δ = Fit on Dia - meter (in.)

E = 2.068×10^{11} pascal (30×10^6 lb/in^2)

b = I.D. of Clamping Part - mm (in.)

c = O.D. of Clamping Part - mm (in.)

Table 1

Class	Force Min.
	Kilonewtons Tons
B & C	**267-35** 30-40
D, E, & F	**445-534** 50-60
G & GG	**534-623** 60-70
K	**445** 50

SHAFT STRESS CALCULATION FOR CARS AND ROLLING STOCK

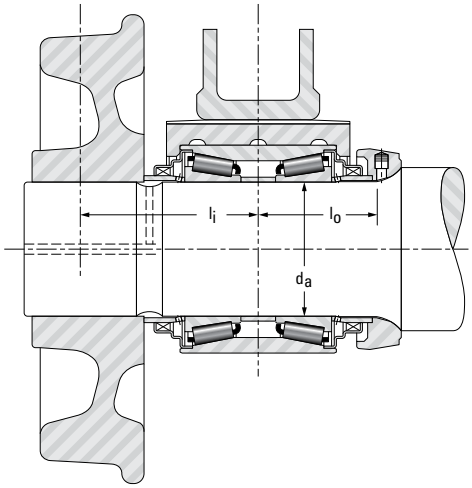

Inboard Journal

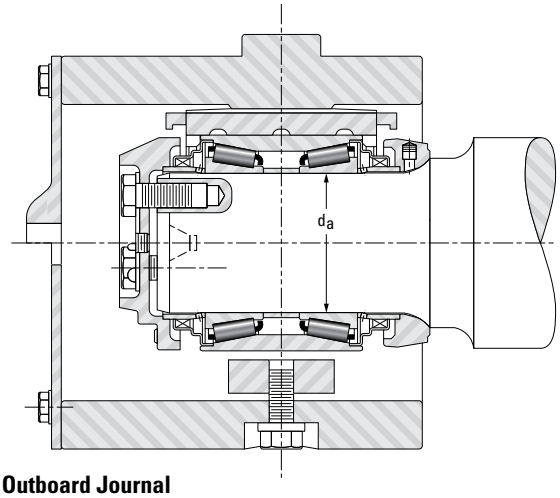

Outboard Journal

$$S = \frac{10.2 \times P \times l}{(d_a)^3}$$

Where:

S = Axle Stress - MPa (lb/in^2)

P = Bearing Load - newton (lb)

d_a = Cone Seat - mm (in.)

l_i and l_o = Moment Arm - mm (in.)

Inboard Journal - l_i = Distance from bearing centerline to wheel load centerline

Outboard Journal - l_o = Distance from bearing centerline to point on d_a tangent to shaft radius

Table 2

Class	d_a	$(d_a)^3$	l_o
	mm in.	**mm^3** in.^{3}	**mm** in.
B (4 ¼ x 8)	**101.600** 4.0000	**105x10^4** 64	**89.2** 3.51
C (5 x 9)	**119.062** 4.6875	**169x10^4** 103	**104.6** 4.12
D (5 ½ x 10)	**131.750** 5.1870	**229x10^4** 140	**109.5** 4.31
E (6 x 11)	**144.450** 5.6870	**301x10^4** 184	**119.4** 4.70
F (6 ½ x 12)	**157.150** 6.1870	**388x10^4** 237	**132.1** 5.20
G (7 x 12)	**177.787** 6.9995	**562x10^4** 343	**122.4** 4.82
G (7 x 14)	**177.787** 6.9995	**562x10^4** 343	**135.1** 5.32
GG (7)	**177.787** 6.9995	**562x10^4** 343	**127.3** 5.01
K (8)	**203.200** 8.0000	**839x10^4** 512	**100.8** 3.97

BEARING LIFE EQUATIONS

$$L_{10} = \left(\frac{C_{90}}{P}\right)^{\frac{10}{3}} \left(\frac{1.5 \times 10^6}{n}\right)$$

Where:

L_{10} = Rated life in hours (life expectancy associated with 90% reliability)

C_{90} = Basic dynamic radial load rating at 500 RPM for 3000 hr L_{10}

P = Dynamic equivalent radial load from a combination of radial and thrust loads

n = Rotational speed in RPM

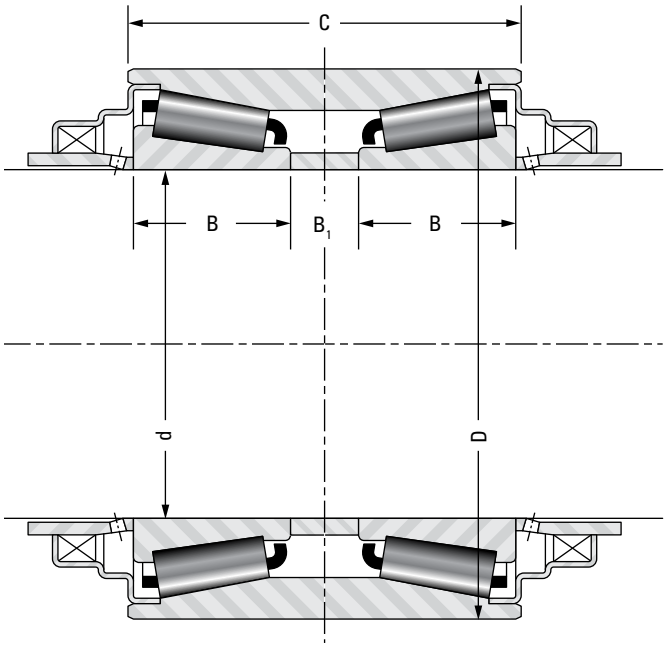

BASIC AP BEARING DIMENSIONS AND RATINGS

Class	Bearing Part No.		d Cone Bore	D Cup O.D.	C Cup Width	B Cone Length	B_1 Spacer Length	Dynamic Rating @ 500 RPM For 3000 Hr L_{10}		K[1] Factor
								Radial C_{90}	Thrust C_{a90}	
	Cone Cone Spacer	Cup	**mm** in.	**mm** in.	**mm** in.	**mm** in.	**mm** in.	**N** lbf	**N** lbf	
B (4 ¼ x 8)	HM120848 HM120848XA	HM120817XD	**101.600** 4.0000	**165.100** 6.5000	**114.300** 4.5000	**49.212** 1.9375	**7.925** .3120	**120000** 26900	**31000** 7000	2.21
C (5 x 9)	HM124646 HM124646XA	HM124618XD	**119.062** 4.6875	**195.262** 7.6875	**142.875** 5.6250	**57.150** 2.2500	**22.225** .8750	**172000** 38600	**44500** 10000	2.21
D (5 ½ x 10)	HM127446 HM127446XA	HM127415XD	**131.750** 5.1870	**207.962** 8.1875	**152.400** 6.0000	**57.150** 2.2500	**31.750** 1.2500	**186000** 41800	**48500** 10900	2.21
E (6 x 11)	HM129848 HM129848XA	HM129814XD	**144.450** 5.6870	**220.662** 8.6875	**163.512** 6.4375	**58.738** 2.3125	**38.100** 1.5000	**195000** 43800	**50700** 11400	2.21
F (6 ½ x 12)	HM133444 HM133444XA	HM133416XD	**157.150** 6.1870	**252.412** 9.9375	**184.150** 7.2500	**69.850** 2.7500	**38.100** 1.5000	**266000** 59700	**69000** 15500	2.21
G (7 x 12) G (7 x 14)	HM136948 HM136948XA	HM136916XD	**177.787** 6.9995	**276.225** 10.8750	**185.725** 7.3120	**74.612** 2.9375	**31.750** 1.2500	**305000** 68600	**79200** 17800	2.21
GG (7)	H337846 H337846XA	H337816XD	**177.787** 6.9995	**301.701** 11.8780	**196.850** 7.7500	**87.312** 3.4375	**15.875** .6250	**388000** 87300	**132110** 29700	1.69
K (8)	M241547 M241547XA	M241513XD	**203.200** 8.0000	**301.625** 11.8750	**140.097** 5.5156	**57.944** 2.2812	**9.525** .3750	**266000** 59700	**87600** 19700	1.76

[1] K Factor is defined as the tapered roller bearing radial to axial dynamic capacity ratio.

ASSEMBLY AND DISASSEMBLY

BEARING INSTALLATION

Bearing assemblies should be stored in a clean dry place, protected from moisture, and kept dry until they are installed on the shaft.

Bearing assemblies should not be removed from the shipping package nor should the protective wrapping be removed until they are installed.

Do not remove the cardboard insert from the bore of the bearing assembly. This insert will hold the cone spacer in alignment with the bearing cones when installing the bearing assembly on the pilot sleeve.

PRESSING BEARING ASSEMBLIES ON SHAFTS

The amount of press fit of the bearing on the shaft is predetermined by the dimensional tolerances of the shaft and bearing cones.

Tools designed for roller bearing installation and removal should be used.

Timken AP bearings may be installed or removed with a bearing press, wheel press, or with portable fixtures depending on production requirements.

Coat the bearing seats of the axle with castor oil, heavy mineral oil, or a molybdenumdisulphide and oil mixture. (Do not use white lead.) Lead compounds may be detrimental to lubricating greases by acting as an oxidation catalyst.

A thin coating of rust preventive can be applied to the axle fillet if the standard backing ring (Fig. 26) is used. The rust preventive used must not contain lead or other compounds which may be detrimental to lubricating greases.

The bearing assemblies are shipped with a protective coating of grease over the vent fitting. Care should be taken to see that the grease is not wiped off when the bearings are applied to the axles.

NOTE: Heat must not be applied to the bearing cone assemblies to facilitate installation.

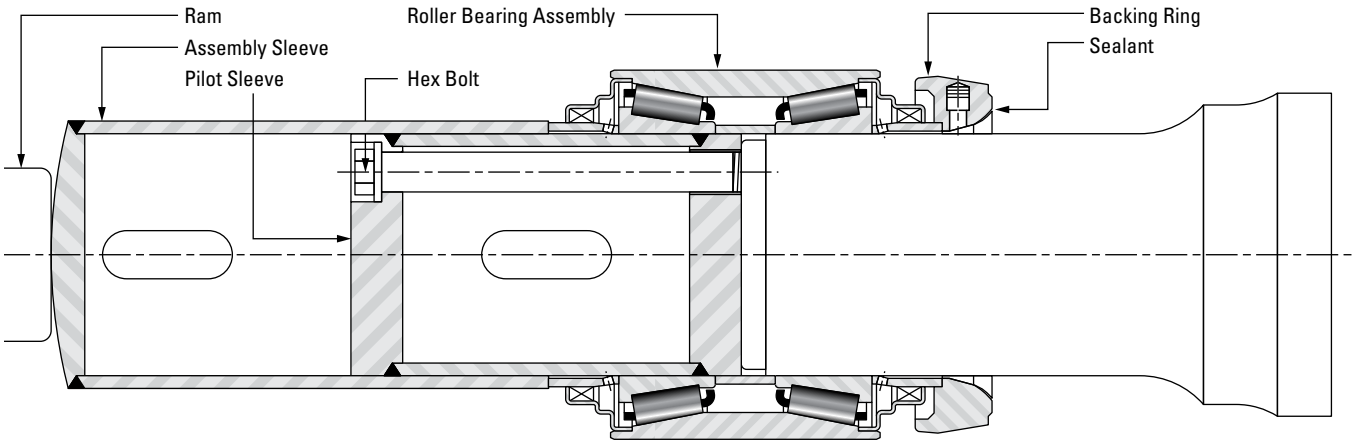

Fig. 26 Separate sleeve method of applying roller bearings to a shaft

A pilot sleeve should be used to keep the cone spacer in alignment with the bores of the cones and to guide the bearing assembly on the axle (page 42).

An assembly sleeve which contacts the seal wear ring outer face and telescopes over the pilot sleeve is used to press the bearing on the axle.

When the bearing assembly is slipped on the pilot sleeve and the cardboard insert is ejected, the seal wear ring should be held in place to prevent it from sliding out of the enclosure seal.

If the seal wear ring slips out of the assembly it must be inserted into the enclosure seal correctly and carefully, chamfered end first, so that the outer lip of the seal does not turn under when the seal lips are expanded over the seal wear ring.

NOTE: Do not insert any tool or other instrument between the seal element lips and seal wear ring. This may damage the seal element lips or scratch the seal wear ring resulting in bearing lubricant leakage.

To make sure that the bearings are firmly seated against the axle fillet, the forces shown (Table 3) should be applied to the bearings after the surge of the pressure gage indicates that the bearings have contacted the axle fillet.

Due to the rubbing type seals, the bearing assembly will not rotate freely at initial application. New bearing assemblies are pre-set at the factory. No adjustment is necessary at installation.

Table 3 Bearing installation force

Class	Clamping Force **Kilonewtons** Tons
B & C	**267-356** 30-40
D, E, & F	**445-534** 50-60
G & GG	**534-623** 60-70
K	**445** 50

APPLYING THE AXLE END CAP

Remove the axle end cap assembly from the carton and remove the cardboard cap screw retainer.

Apply the axle end cap, locking plate, and cap screws to the end of the axle as a unit.

A ratchet wrench or an impact wrench may be used to run up the cap screws.

Tighten the cap screws with a torque wrench to the torque specified in (Table 4). Re-check each cap screw several times until the specified torque is obtained for each cap screw.

Table 4 Cap screw tightening torque

Cap Screw Size	Torque **N-m** lb-fat
⅝ in.	**149-163** 110-120
¾ in.	**149-163** 110-120
⅞ in.	**190-203** 140-150
1 in.	**339-366** 250-270
1 ⅛ in.	**488-529** 360-390
1 ¼ in.	**583-624** 430-460

Lock the cap screws by bending all tabs of the locking plate flat against the sides of the cap screw heads. For the recessed end cap, simply wire the heads together.

If water or humid conditions exist, a bead of sealant can be applied around the joint of the backing ring and shaft, after the bearing assembly is pressed in place (not required for backing rings press fitted on shaft step).

EQUIPMENT FOR BEARING INSTALLATION AND REMOVAL

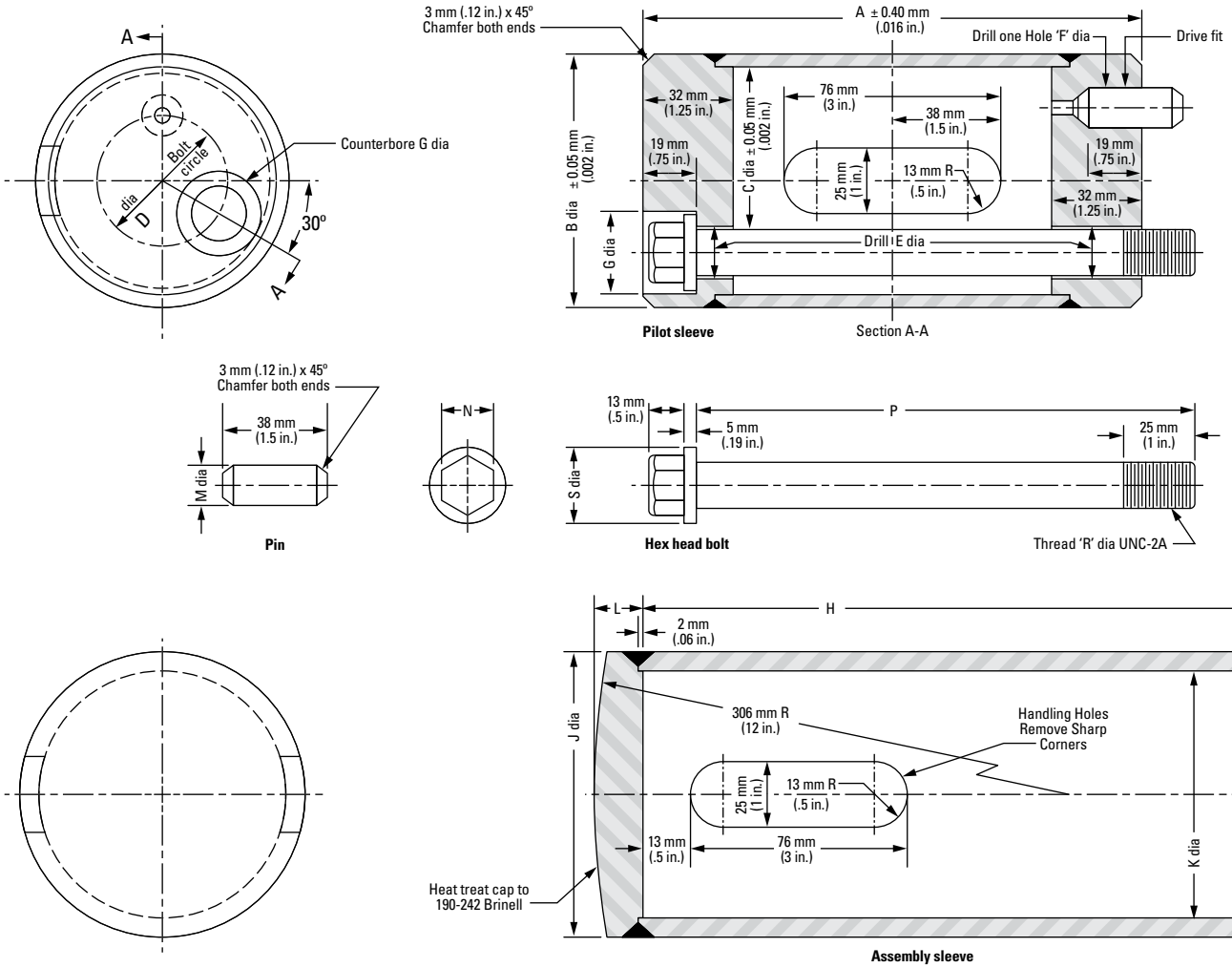

End Cap	All			Axle End Cap				Recessed				All				Axle End Cap					Recessed				
	Pilot Sleeve											Assembly Sleeve				Pin	Hex Head Bolt				Pin	Hex Head Bolt			
Class	A ±0.04 mm ±0.016 in.	B ±0.05 mm ±0.002 in.	C +0.05 mm +0.002 in. -0.00 mm -0.000 in.	D	E	F	G	D	E	F	G	H	J	K	L	M	N	P	R	S	M	N	P	R	S
	mm in.	mm in.	mm in.	mm in.	mm in.	mm in.	mm in.	mm in.	mm in.	mm in.	mm in.	mm in.	mm in.	mm in.	mm in.	mm in.	in.	mm in.	in.	mm in.	mm in.	in.	mm in.	in.	mm in.
B (4 ¼ x 8)	**184** 7.25	**101.04** 3.978	**88.90** 3.500	**61.9** 2.44	**20** .781	**16** .625	**30** 1.19	**60.3** 2.38	**17** .656	**13** .500	**27** 1.06	**229** 9	**116** 4.56	**101.88** 4.011	**19** 0.75	**16** 0.625	0.812	**184** 7.25	¾ - 10	**29** 1.12	**13** 0.5	0.625	**184** 7.25	⅝ - 11	**25** 1.00
C (5 x 9)	**216** 8.5	**118.49** 4.665	**106.35** 4.187	**76.2** 3.00	**23** .906	**19** .734	**33** 1.31	**76.2** 3.00	**17** .656	**13** .500	**27** 1.06	**254** 10	**133** 5.25	**119.33** 4.698	**19** 0.75	**19** 0.734	0.875	**216** 8.5	⅞ - 9	**32** 1.25	**13** 0.5	0.625	**216** 8.5	⅝ - 11	**25** 1.00
D (5 ½ x 10)	**216** 8.5	**131.19** 5.165	**119.05** 4.687	**88.9** 3.50	**23** .906	**19** .734	**33** 1.31	**76.2** 3.00	**23** .906	**19** .734	**33** 1.31	**260** 10.25	**146** 5.75	**132.03** 5.198	**19** 0.75	**19** 0.734	0.875	**216** 8.5	⅞ - 9	**32** 1.25	**19** 0.734	0.875	**216** 8.5	⅞ - 9	**32** 1.25
E (6 x 11)	**238** 9.38	**143.89** 5.665	**131.75** 5.187	**98.4** 3.88	**26** 1.031	**21** .844	**37** 1.44	**82.6** 3.25	**26** 1.031	**21** .840	**37** 1.44	**279** 11	**159** 6.25	**144.73** 5.698	**19** 0.75	**21** 0.844	0.938	**238** 9.38	1-8	**35** 1.38	**21** 0.844	0.938	**238** 9.38	1-8	**35** 1.38
F (6 ½ x 12)	**260** 10.25	**156.59** 6.165	**144.45** 5.687	**108.0** 4.25	**30** 1.156	**24** .953	**40** 1.56	**88.9** 3.50	**26** 1.031	**21** .844	**37** 1.44	**279** 11	**171** 6.75	**157.43** 6.198	**25** 1	**24** 0.953	1	**260** 10.25	1 ⅛ - 7	**38** 1.5	**21** 0.844	0.938	**260** 10.25	1-8	**35** 1.38
G (7 x 12) G (7 x 14)	**260** 10.25	**177.24** 6.978	**165.10** 6.500	**117.5** 4.62	**33** 1.281	**27** 1.078	**43** 1.69	**101.6** 4.00	**30** 1.156	**24** .953	**40** 1.56	**283** 11.12	**192** 7.56	**178.10** 7.012	**32** 1.25	**27** 1.078	1.125	**260** 10.25	1 ¼ - 7	**41** 1.62	**24** 0.953	1.000	**260** 10.25	1 ⅛ - 7	**38** 1.50
GG (7)	**260** 10.25	**177.24** 6.978	**165.10** 6.500	**117.5** 4.62	**33** 1.281	**27** 1.078	**43** 1.69	**101.6** 4.00	**30** 1.156	**24** .953	**40** 1.56	**283** 11.12	**192** 7.56	**178.10** 7.012	**32** 1.25	**27** 1.078	1.125	**260** 10.25	1 ¼ - 7	**41** 1.62	**24** 0.953	1.000	**260** 10.25	1 ⅛ - 7	**38** 1.50
K (8)	**203** 8	**204.64** 7.978	**190.50** 7.500	–	–	–	–	**123.8** 4.88	**30** 1.156	**24** .953	**40** 1.56	**216** 8.5	**222** 8.75	**203.5** 8.012	**38** 1.5	–	–	–	–	–	**24** 0.953	1.000	**203** 8	1 ⅛ - 7	**38** 1.50

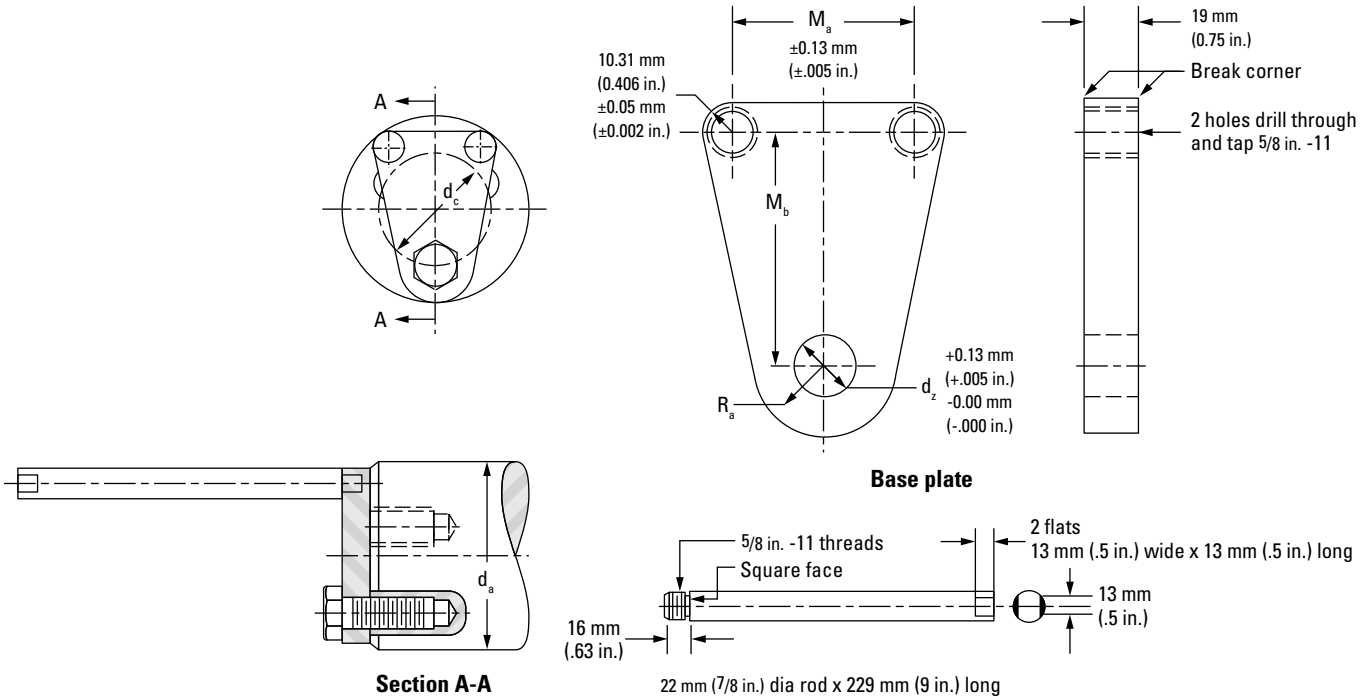

Class	d_a [1]	M_a	Axle End Cap				Recessed End Cap			
			M_b	R_a	d_c	d_z	M_b	R_a	d_c	d_z
	mm in.	**mm** in.	**mm** in.	**mm** in.	**mm** in.	in.	**mm** in.	**mm** in.	**mm** in.	in.
B (4 ¼ x 8)	**101.702-101.676** 4.0040-4.0030	**50.80** 2.000	**61.44** 2.419	**16.8** 0.66	**61.9** 2.44	0.750	**60.66** 2.388	**17.5** 0.69	**60.3** 2.38	0.625
C (5 x 9)	**119.164-119.138** 4.6915-4.6905	**63.50** 2.500	**74.65** 2.939	**18.3** 0.72	**76.2** 3.00	0.875	**74.65** 2.939	**18.3** 0.72	**76.2** 3.00	0.625
D (5 ½ x 10)	**131.864-131.838** 5.1915-5.1905	**63.50** 2.500	**89.08** 3.507	**18.3** 0.72	**88.9** 3.50	0.875	**82.73** 3.257	**24.6** 0.97	**76.2** 3.00	0.875
E (6 x 11)	**144.564-144.538** 5.6915-5.6905	**69.85** 2.750	**99.36** 3.912	**19.8** 0.78	**98.4** 3.88	1.000	**91.41** 3.599	**27.7** 1.09	**82.6** 3.25	1.000
F (6 ½ x 12)	**157.264-157.238** 6.1915-6.1905	**76.20** 3.000	**109.65** 4.317	**21.3** 0.84	**108.0** 4.25	1.125	**100.13** 3.942	**31.0** 1.22	**88.9** 3.50	1.000
G (7 x 12) G (7 x 14)	**177.902-177.876** 7.0040-7.0030	**88.90** 3.500	**122.56** 4.825	**26.9** 1.06	**117.5** 4.62	1.250	**114.63** 4.513	**35.1** 1.38	**101.6** 4.00	1.125
GG (7)	**177.902-177.876** 7.0040-7.0030	**88.90** 3.500	**122.56** 4.825	**26.9** 1.06	**117.5** 4.62	1.250	**114.63** 4.513	**35.1** 1.38	**101.6** 4.00	1.125
K (8)	**203.327-203.302** 8.0050-.8.0040	**101.60** 4.000	–	–	–	–	**136.78** 5.385	**36.6** 1.44	**123.8** 4.88	1.125

[1] Axle size for rotating cone applications
NOTE: For those applications where a limited quantity of bearings are to be mounted, the assembly tool shown above can be economically fabricated.

SIMPLIFIED INSTALLATION OF AP BEARINGS FOR INDUSTRIAL EQUIPMENT

INSTALLATION METHODS

What does the operator of a machine do when the operator's machine, located in a remote area away from any sophisticated tools, needs a bearing replaced? Timken suggests using the following procedures for installing AP bearings when sophisticated tools are not available. These methods for installing AP bearings are valuable ways of saving time and money.

Unlike other tapered roller bearing installations where the individual components are installed separately, the complete AP bearing assembly should be installed at the same time.

HYDRAULIC RAM METHOD

One method of installation utilizes a pressure piston pump and ram in an arrangement as shown at right.

The 445 kilonewton (50 ton) capacity centerhole hydraulic ram is used for the Class D (5 ½ x 10) bearing.

THREADED ROD AND NUT METHOD

One of the least expensive tooling arrangements for installing our AP bearing utilizes the tools shown in Fig. 27.

The push tube is counterbored to accommodate our T127 thrust bearing to eliminate much of the friction between the nut face and the push tube.

Fig. 27 Auxiliary equipment

⚠ WARNING

Failure to observe the following warnings could create a risk of death or serious injury.

Always use suitable personal protective equipment, including safety glasses.

TOOLING

Both installation methods used a 1 ¼ in.-7 UNC threaded rod (SAE 4340 steel, hardened 48-53 Rc) threaded into a bearing pilot. Both methods use a push tube, nut, and cap screws. An example of tooling is shown in Fig. 28.

Three cap screws are then used to bolt the bearing pilot to the end of the shaft.

Lubricant is applied to the shaft before pressing on the bearing.

Required installation clamping force for each size of AP bearing may be obtained from page 39.

COMPARISON OF METHODS

If the user does not own a hydraulic pump and ram, the "threaded rod and nut" method may be less expensive. However, the threaded rod and nut method requires slightly more time and effort to install the bearing.

Regardless of the method used for installing the bearing assembly, it should be made certain that all components are properly seated.

WARNING

Failure to observe the following warnings could create a risk of death or serious injury.

Proper maintenance and handling practices are critical.

Always follow installation instructions and maintain proper lubrication.

Fig. 28 Tooling used to push bearing onto shaft

BEARING REMOVAL (AXLE)

The bearing assemblies may be removed with a press or with portable fixtures. A force of 356-534 kilonewtons (40 to 60 tons) is normally required to break the bearing fit.

When it is desirable to remove the bearing without removing a wheel or other adjacent backing part, a pulling shoe is used, similar to that shown in Fig. 29.

Make sure that the pulling shoe is of the correct size for the bearing to be removed. Proper contact with the backing ring and puller alignment are necessary for efficient bearing removal.

Position the pulling shoe behind the backing ring. The pulling shoe contact surface of the backing ring is very narrow. Therefore, it is necessary to hold the pulling shoe down in position behind the backing ring as shown below until the initial pressure has been applied to ensure proper contact with the backing ring. Extend the ram to remove the bearing from the axle.

If bearings are to be removed along with wheels, make sure that the wheel hub will contact the backing ring or seal wear ring if a backing ring is not used. If the axle has large wheel seats, a suitable shoe or blocks must be used to make contact between the wheel hub and backing ring.

When bearings are removed from the axle, a pilot sleeve or guide tube should be fastened to the end of the axle or to the press ram to keep the bearing parts together and protect them from damage. Do not drop the bearing when removing it from the pilot sleeve.

After the bearing assembly is removed from the pilot sleeve, a tube similar to the cardboard insert or a similar device should be inserted in the bore of the bearing assembly to hold the internal bearing parts in place. Particular attention should be given to keeping the seal wear ring in place in the enclosure seals.

When bearing assemblies are removed from the axles, the bearings should be disassembled, cleaned and inspected.

Fig. 29 Holding the pulling shoe down against the bearing face bearing puller

LUBRICATION OF AP BEARINGS

Timken AP bearings are furnished prelubricated approximately half full with greases approved by the Association of American Railroads (AAR) Specification M942-78.

To help prevent the ingress of contamination, it is advantageous for the customer to fill the AP bearing completely full of grease, particularly in low and moderate speed applications. The grease used to fill the bearing must be compatible with the factory fill grease. That is, any grease added to the factory grease must not result in grease softening and consequent leakage around the seals. A lithium 12 hydroxy stearate soap grease with added rust and oxidation inhibitors is suggested. The viscosity of the base oil should be in a range from 150-220 cSt at 40°C (60-100 SUS at 210°F). An NLGI No. 2 grease is preferred; however, if there is a problem of pumping an NLGI No. 2 grease in cold weather, an NLGI No. 1 grease can be used.

In industrial applications, factory fill greases are generally satisfactory up to 93°C (200°F) on a continuous basis and up to 121 °C (250°F) on an intermittent operation basis. For higher temperature operating environments and grease temperatures up to 177°C (350°F), a high temperature grease should be used to fill the AP bearing, as well as for further relubrication. In these instances, products utilizing a urea, or complex, thickener should be used. The grease selected must also have rust and oxidation inhibitors and a minimum base oil viscosity of 150 cSt at 40°C (60 SUS at 210°F). Frequent relubrication may be required even with higher temperature capability greases.

⚠ WARNING

Failure to observe the following warnings could create a risk of death or serious injury.

Proper maintenance and handling practices are critical.

Always follow installation instructions and maintain proper lubrication.

GREASE CAPACITIES OF AP BEARINGS

Class	Normal Initial Charge	Additional Grease Required to Fill		Total Additional Grease Required to Completely Fill Assembly [1]
		Bearing	Axle End Cap	
	g oz.	g oz.	g oz.	g oz.
B (4 ¼ x 8)	**227** 8	**221** 7.8	**91** 3.2	**312** 11
C (5 x 9)	**340** 12	**403** 14.2	**96** 3.4	**499** 17.6
D (5 ½ x 10)	**454** 16	**445** 15.7	**133** 4.7	**578** 20.4
E (6 x 11)	**454** 16	**593** 20.9	**179** 6.3	**771** 27.2
F (6 ½ x 12)	**680** 24	**958** 33.8	**181** 6.4	**1140** 40.2
G (7 x 12) G (7 x 14)	**907** 32	**1035** 36.5	**207** 7.3	**1242** 43.8
GG (7)	**907** 32	**1469** 51.8	**414** 14.6	**1882** 66.4
K (8)	**765** 27	**765** 27	**227** 8	**992** 35

[1] This column sums additional grease required to fill the bearing and end cap.

HOW TO ORDER

AP BEARING ORDERING PROCEDURE 48

BASIC AP BEARING ASSEMBLY NUMBERS - METHOD 1 . . . . . **50**
AP Bearing Assembly Section. 50
Auxiliary Parts 51
AP Bearing Auxiliary Parts Selection. 51

SUPPLEMENTAL AND SPECIAL ASSEMBLY NUMBERS - METHOD 2 52
Typical AP Bearing Mounting Arrangements 52
Bearing Mounting Arrangement 1 55
Bearing Mounting Arrangement 1A 56
Bearing Mounting Arrangement 2 57
Bearing Mounting Arrangement 2A 58
Bearing Mounting Arrangement 2B 59
Bearing Mounting Arrangement 3 60
Bearing Mounting Arrangement 3A 61
Bearing Mounting Arrangement 3B 62
Bearing Mounting Arrangement 3C 63
Bearing Mounting Arrangement 4 64
Bearing Mounting Arrangement 5 65
Bearing Mounting Arrangement 5A 66
Bearing Mounting Arrangement 5B 67
Bearing Mounting Arrangement 5C 68
Bearing Mounting Arrangement 5D 69
Bearing Mounting Arrangement 6 70
Bearing Mounting Arrangement 6A 71
Bearing Mounting Arrangement 6B 72
Axle End Cap Assemblies. 73
Recessed End Cap Assemblies 74
Backing Ring with Shroud 75
Backing Spacer 76
Assemblies with Special Cup
for Relubrication to Center of the Bearing 77
Assemblies with Non-Standard - Reduced Width 78

AP BEARING ORDERING PROCEDURE

Bearing assemblies may be ordered by two different methods.

Method 1

Purchase one of the two basic bearing mounting arrangements shown on page 50, plus the required auxiliary parts shown on page 51.

Method 2

Purchase an entire assembly or kit using the overall bearing assembly number as shown in the "Supplemental and Special Assembly Number" lists on pages 52 to 78. This overall assembly number includes all needed auxiliary parts.

Adapters are not part of the bearing assembly and should be ordered separately giving:

Quantity - bearing class - part number (page 52).

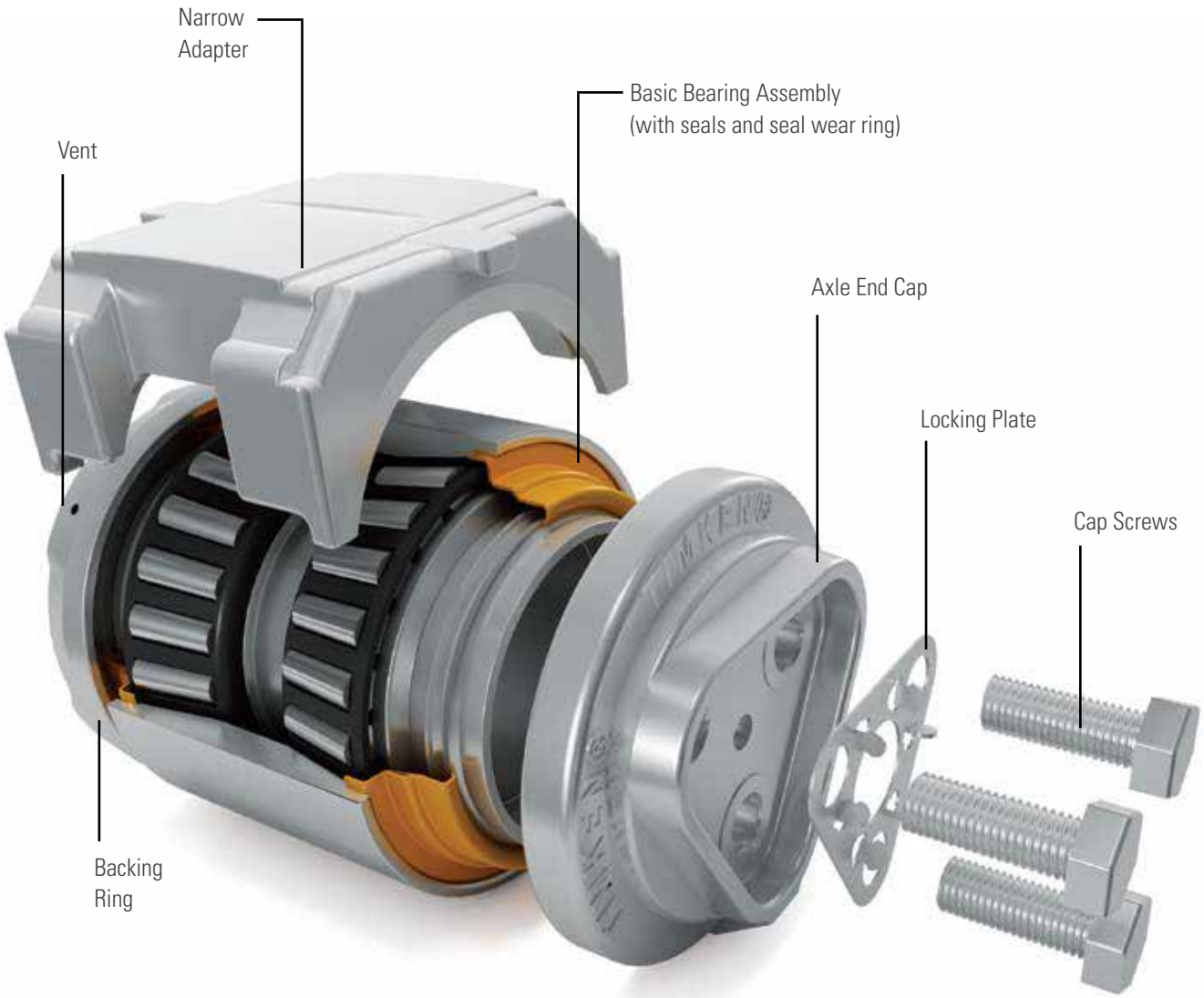

Fig. 30 3D illustration of AP bearing

BASIC AP BEARING ORDERING PROCEDURE

To facilitate order entry, identify the bearing assembly and required auxiliary parts by specifying the following details from the tables shown on pages 50 and 51. Also specify the quantity of each subassembly required to make up the assembly to suit your application. See page 12 for a detailed explanation of assembly numbers.

An AP bearing assembly consists of:

- Basic AP assembly, does not include end cap (page 50)
- End cap – one per bearing (page 51)
- Backing spacer – one per bearing (page 51) with (choose one per bearing):
  - pipe plug
  - or lubricant fitting
  - or vent fitting

EXAMPLES

1. A Class D assembly with shroud and pressed backing ring includes the following part numbers to order:

- HM127446 90012 AP bearing assembly with shroud (page 50)
- K85521 90011 axle end cap assembly - one per bearing (page 51)

2. A Class D assembly with auxiliary parts includes the following part numbers to order:

- HM127446 90048 basic AP bearing assembly (page 50)
- K85521 90011 axle end cap assembly - one per bearing (page 51)
- K120178 backing spacer - one per bearing (page 51)
- K83093 vent fitting - one per bearing (page 51)

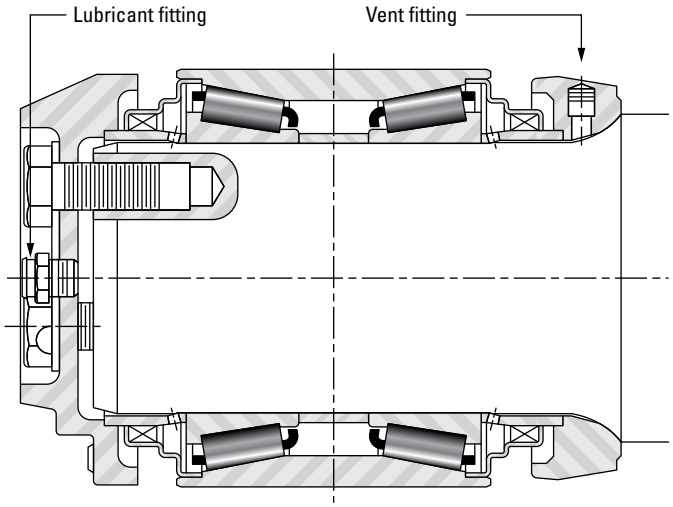

Fig. 31 Cross section view of AP bearing with shroud

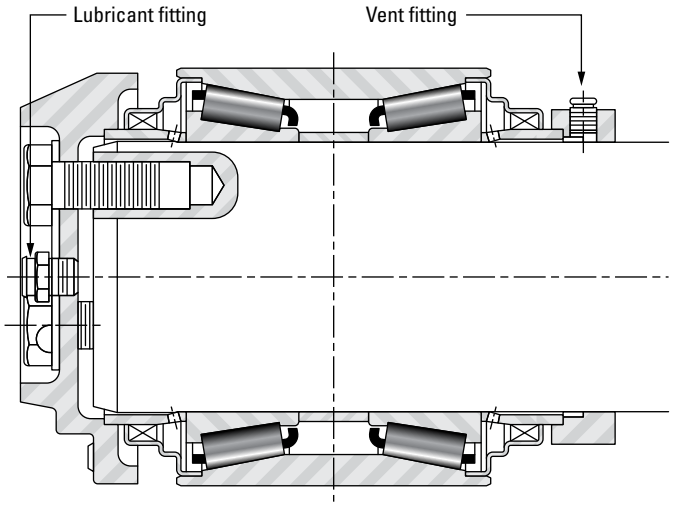

Fig. 32 Cross section view of AP bearing

BASIC AP BEARING ASSEMBLY NUMBERS - METHOD 1

BASIC BEARING ASSEMBLY NUMBERS

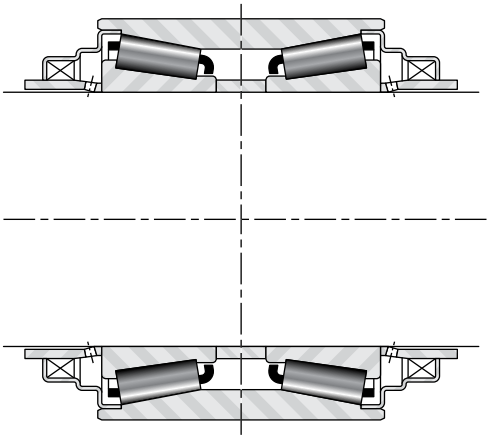

Basic AP Bearing

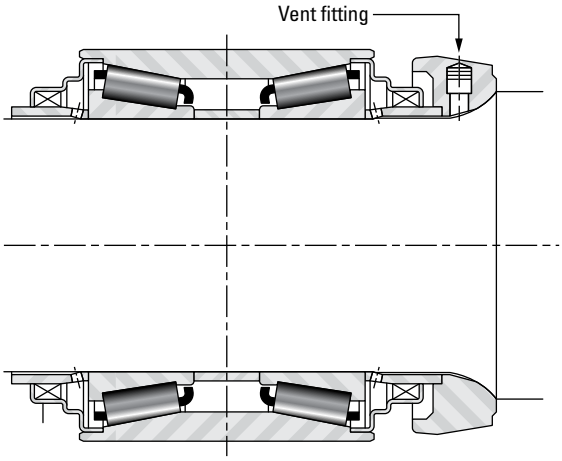

Basic AP Bearing with Backing Ring Pressed on with Shroud

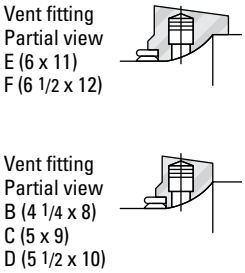

Backing Ring Assembly without Shroud

NOTE: Specify backing ring with or without shroud. Backing rings without shroud have reduced O.D. to facilitate assembly in some housing designs. Backing rings with shroud provide added seal protection where required.

AP BEARING ASSEMBLY SECTION

Determine basic AP bearing assembly required and specify from the following table (include CONE NUMBER as shown with bearing Class):

Example: If a Class D bearing with a backing ring with shroud is required, specify: AP bearing Class D HM127446-90012.

Class - Cone Number	Basic AP Bearing Assembly Number	Basic AP Bearing with Backing Ring Pressed on (Assembly Number)	
		Backing Ring With Shroud	Backing Ring Without Shroud
B (4 ¼ x 8) HM120848	90014	90012	90124
C (5 x 9) HM124646	90056	90014	
D (5 ½ x 10) HM127446	90048	90012	90318
E (6 x 11) HM129848	90054	90012	90308
F (6 ½ x 12) HM133444	90076	90012	90424
G (7 x 12) HM136948	-	90320	-
G (7 x 14) HM136948	90226	90228	-
GG (7) H337846	90248	90262	-
K (8) M241547	90028	-	-

NOTE: Cup O.D. tolerances of 0.025 mm (.0010 in.), reduced width assemblies, assemblies with provision for relubrication through the center of the cup, and assemblies without seal parts are available in some bearing classes. Consult your Timken representative for availability.

AUXILIARY PARTS

Auxiliary parts may be added to basic AP bearings, as required.

NOTE: Provide for relubrication on one side of bearing with vent at opposite side. If an auxiliary part is not used, these provisions should be made in parts adjacent to the bearing.

Axle End Cap Assembly Includes:
(Qty: 1) End Cap
(Qty: 3) Cap Screws
(Qty: 1) Lock Plate
(Qty: 1) Fitting

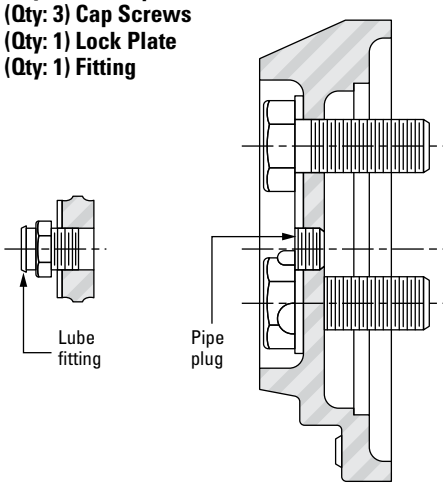

Recessed End Cap Assembly Includes:
(Qty: 1) End Cap
(Qty: 3) Cap Screws
(Qty: 1) Pipe Plug

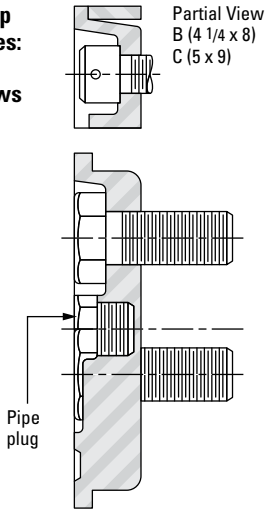

Backing Spacer (with fitting choices)

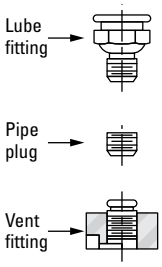

AP BEARING AUXILIARY PARTS SELECTION

Class	Axle End Cap Assembly			Recessed End Cap Assembly		Backing Spacer	Lube Fitting Pipe Plug Vent Fitting
	Part No	Assy No Assy No	Incl Pipe Plug I ncl Lube Fitting	Part No	Assy No		Select One Per Backing Spacer
B (4 ¼ x 8)	K86877 K86877	90010 90012	Incl. Pipe Plug Incl. Lube Fitting	K399069	90010	K118891	K78880 K46462 K83093
C (5 x 9)	K86003 K86003	90010 90015	Incl. Pipe Plug Incl. Lube Fitting	K399070	90010	K120198	K78880 K46462 K83093
D (5 ½ x 10)	K85521 K85521	90010 90011	Incl. Pipe Plug Incl. Lube Fitting	K399071	90010	K120178	K78880 K46462 K83093
E (6 x 11)	K85510 K85510	90010 90011	Incl. Pipe Plug Incl. Lube Fitting	K399072	90010	K120190	K78880 K46462 K83093
F (6 ½ x 12)	K85517 K85517	90010 90012	Incl. Pipe Plug Incl. Lube Fitting	K399073	90010	K120160	K78880 K46462 K83093
G (7 x 12)	K95199 K95199	90010 90011	Incl. Pipe Plug Incl. Lube Fitting	K399074	90010	K118866	K78880 K46462 K83093
G (7 x 14)	K412057 K412057	90010 90011	Incl. Pipe Plug Incl. Lube Fitting	K399074	90010	K118866	K78880 K46462 K83093
GG (7)	–	– 90010	Incl. Pipe Plug Incl. Lube Fitting	K399074	90010	K118866	K78880 K46462 K83093
K (8)	N.A.			K504075	90010	N.A.	

SUPPLEMENTAL AND SPECIAL ASSEMBLY NUMBERS - METHOD 2

TYPICAL AP BEARING MOUNTING ARRANGEMENTS

The following illustrations on pages 52 to 78 show typical combinations of basic AP bearings and auxiliary parts. See page 12 for a detailed explanation of assembly numbers. When these overall assemblies are used with the narrow adapter shown in Fig. 33, bearing mounting kits are formed.

When making up a mounting arrangement, a provision for relubrication should be made on one side of the bearing, with a vent on the opposite side. If an auxiliary part is not used, these provisions should be made in the parts adjacent the bearing.

Also, when designing an AP bearing into an application, the bearing must always be securely clamped through the cones. Depending on the mounting arrangement used, this may require additional parts, such as spacers, which are not furnished by Timken.

Table 5 Adapter Part Numbers

Class	Narrow Adapter
B	K86888
C	K85581
D	K85530
E	K85073
F	K85524
G (7 x 12)	K83138
G (7 x 14)	K83138
GG (7)	–
K	K522803

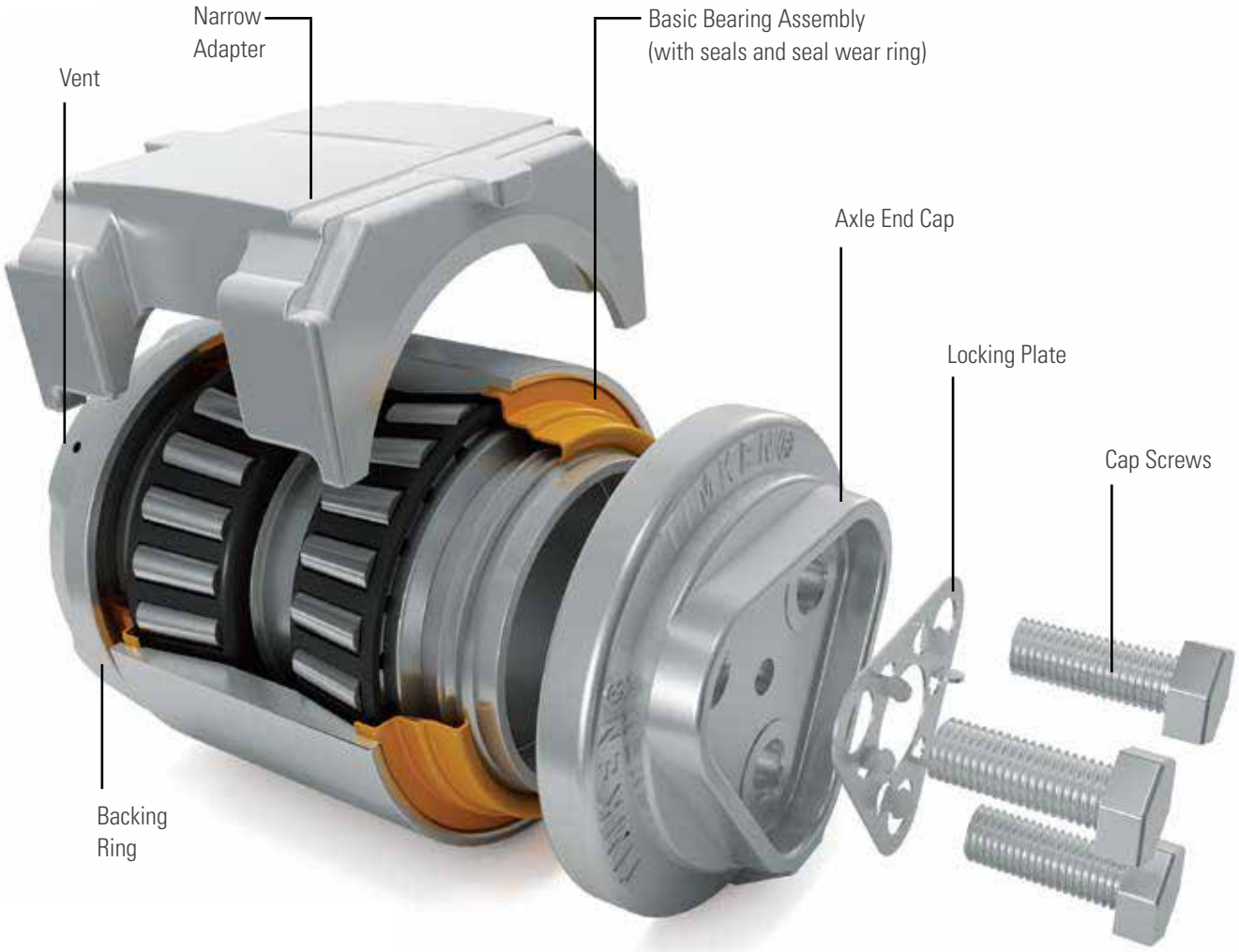

Fig. 33 3D illustration of AP bearing

Mounting arrangements are shown in sequential order.
See following pages for ordering information.

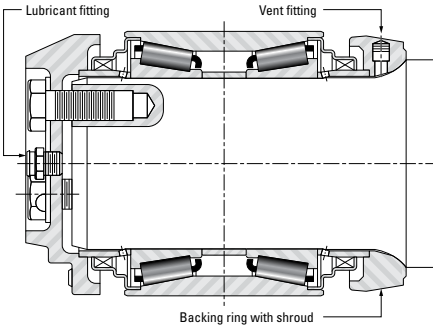

Fig. 34 Mounting Arrangement 1

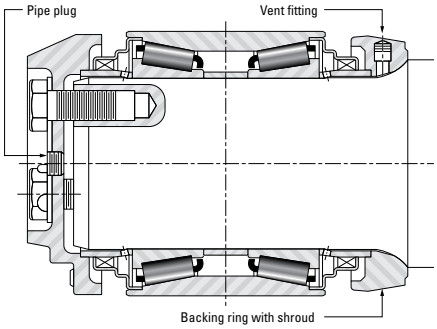

Fig. 35 Mounting Arrangement 1A

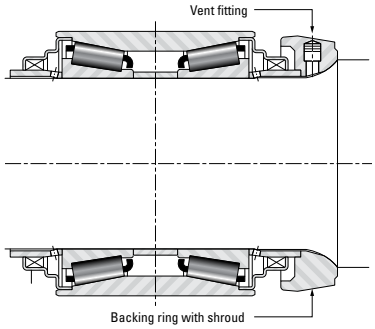

Fig. 36 Mounting Arrangement 2

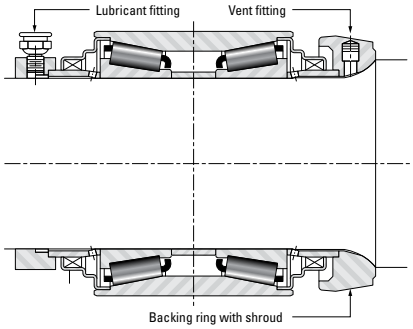

Fig. 37 Mounting Arrangement 2A

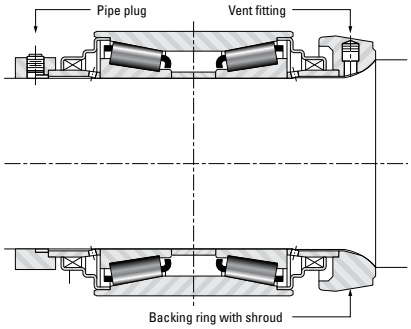

Fig. 38 Mounting Arrangement 2B

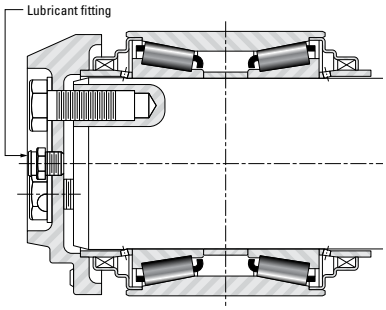

Fig. 39 Mounting Arrangement 3

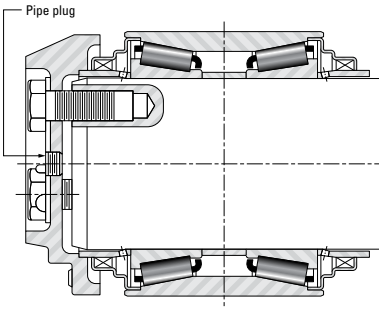

Fig. 40 Mounting Arrangement 3A

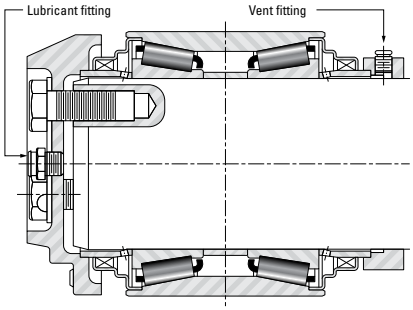

Fig. 41 Mounting Arrangement 3B

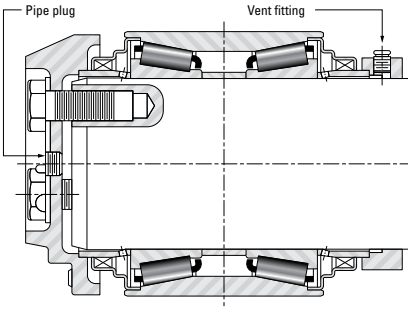

Fig. 42 Mounting Arrangement 3C

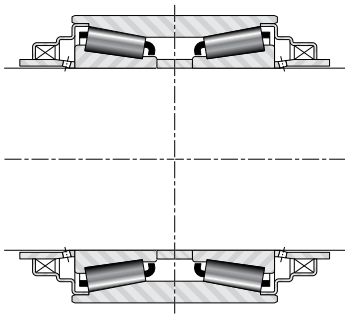

Fig. 43 Mounting Arrangement 4

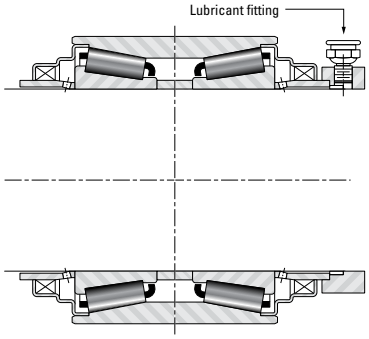

Fig. 44 Mounting Arrangement 5

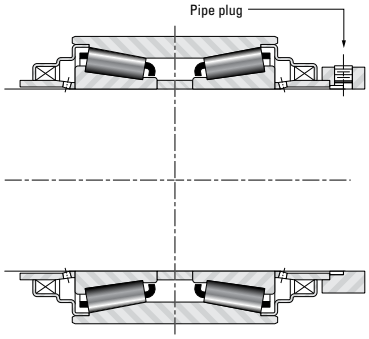

Fig. 45 Mounting Arrangement 5A

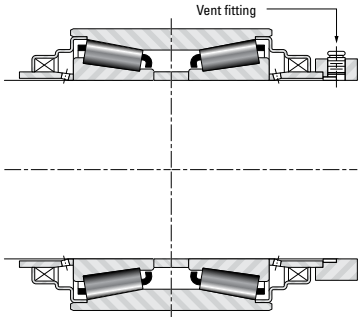

Fig. 46 Mounting Arrangement 5B

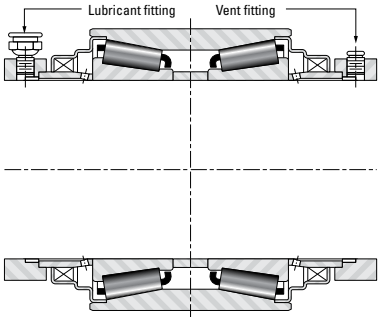

Fig. 47 Mounting Arrangement 5C

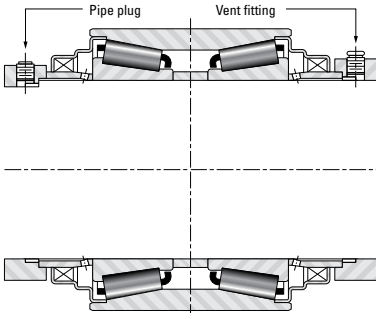

Fig. 48 Mounting Arrangement 5D

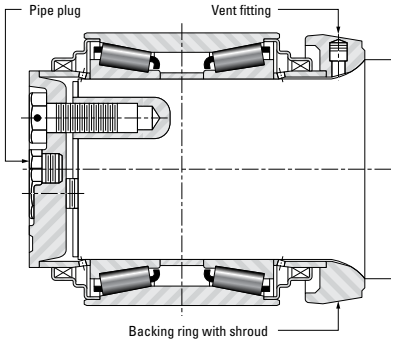

Fig. 49 Mounting Arrangement 6

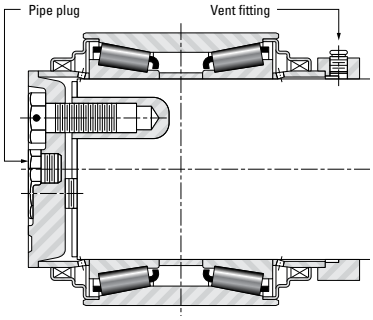

Fig. 50 Mounting Arrangement 6A

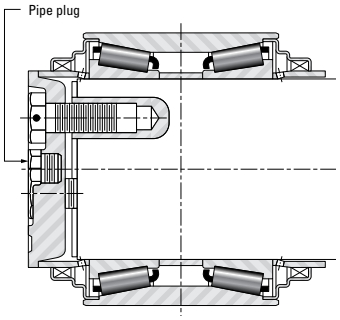

Fig. 51 Mounting Arrangement 6B

BEARING MOUNTING ARRANGEMENT 1

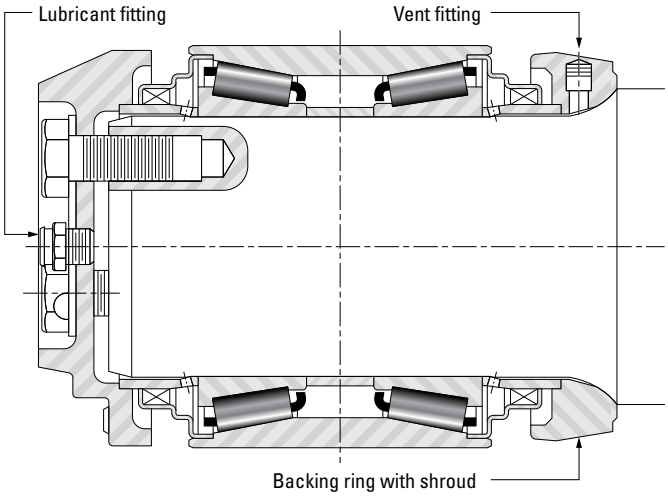

Class	Overall Assembly Standard	Overall Assembly Code 350[1]	Auxiliary Parts Sub Assemblies[2]
B	HM120848 - 90023	HM120848	Axle end cap K86877-90012 Backing ring K86874-90010
C	HM124646 - 90047	HM124646	Axle end cap K86003-90015 Backing ring K85588-90010
D	HM127446 - 90011	HM127446 - 90211	Axle end cap K85521-90011 Backing ring K85525-90010
E	HM129848 - 90011	HM129848 - 90125	Axle end cap K85510-90011 Backing ring K85095-90010
F	HM133444 - 90015	HM133444 - 90211	Axle end cap K85517-90012 Backing ring K85516-90010
G (7 x 12)	HM136948 - 90359	HM136948 - 90355	Axle end cap K95199-90011 Backing ring K147766-90010
G (7 x 14)	HM136948 - 90251	HM136948	Axle end cap K412057-90011 Backing ring K95200-90010
GG (7)	H337846	H337846	Axle end cap K95199 Backing ring K147766-90010
K	M241547	M241547	Axle end cap Backing ring

[1] Code 350 provides a cup O.D. tolerance of +.003 +.004 in. and is used in applications requiring a press fit for the cup.
[2] For reference only.
NOTE: Auxiliary parts are supplied with the overall assembly number – see pages 73 to 76 for listing of component parts.

BEARING MOUNTING ARRANGEMENT 1A

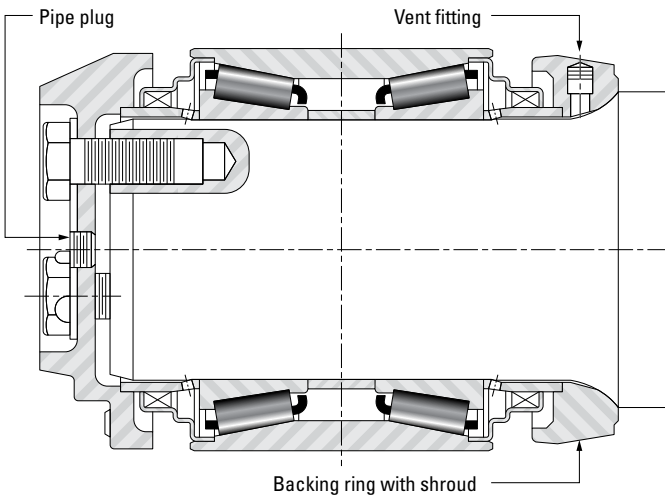

Class	Overall Assembly Standard	Overall Assembly Code 350[1]	Auxiliary Parts Sub Assemblies[2]
B	HM120848 -90011	HM120848 - 90059	Axle end cap K86877-90010 Backing ring K86874-90010
C	HM124646 -90013	HM124646	Axle end cap K86003-90010 Backing ring K85588-90010
D	HM127446 -90013	HM127446	Axle end cap K85521-90010 Backing ring K85525-90010
E	HM129848 -90013	HM129848	Axle end cap K85510-90010 Backing ring K85095-90010
F	HM133444 -90011	HM133444	Axle end cap K85517-90010 Backing ring K85516-90010
G (7 x 12)	HM136948 -90327	HM136948	Axle end cap K95199-90010 Backing ring K147766-90010
G (7 x 14)	HM136948 -90243	HM136948	Axle end cap K412057-90010 Backing ring K95200-90010
GG (7)	H337846	H337846	Axle end cap K95199 Backing ring K147766-90010
K	M241547	M241547	Axle end cap Backing ring

[1] Code 350 provides a cup O.D. tolerance of +.003 +.004 in. and is used in applications requiring a press fit for the cup.
[2] For reference only.
NOTE: Auxiliary parts are supplied with the overall assembly number – see pages 73 to 76 for listing of component parts.

BEARING MOUNTING ARRANGEMENT 2

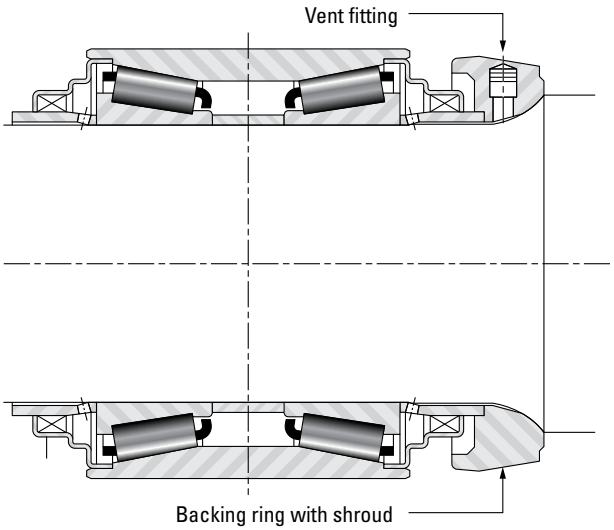

Class	Overall Assembly Standard	Overall Assembly Code 350[1]	Auxiliary Parts Sub Assemblies[2]
B	HM120848 -90012	HM120848 - 90060	Backing ring K86874-90010
C	HM124646 -90014	HM124646 - 90180	Backing ring K85588-90010
D	HM127446 -90012	HM127446 - 90098	Backing ring K85525-90010
E	HM129848 -90012	HM129848 - 90114	Backing ring K85095-90010
F	HM133444 -90012	HM133444 - 90212	Backing ring K85516-90010
G (7 x 12)	HM136948 -90320	HM136948 - 90334	Backing ring K147766-90010
G (7 x 14)	HM136948 -90228	HM136948 - 90254	Backing ring K95200-90010
GG (7)	H337846 -90262	H337846 - 90270	Backing ring K147766-90010
K	M241547	M241547	Backing ring

[1] Code 350 provides a cup O.D. tolerance of +.003 +.004 in. and is used in applications requiring a press fit for the cup.
[2] For reference only.
NOTE: Auxiliary parts are supplied with the overall assembly number – see pages 73 to 76 for listing of component parts.

BEARING MOUNTING ARRANGEMENT 2A

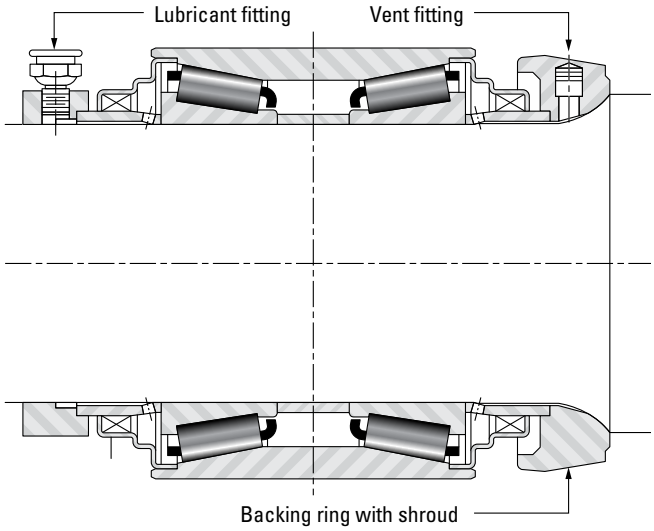

Class	Overall Assembly Standard	Overall Assembly Code 350[1]	Auxiliary Parts Sub Assemblies[2]
B	HM120848 -90080	HM120848	Backing spacer K118891 Lube fitting K78880 Backing ring K86874-90010
C	HM124646 -90086	HM124646 - 90098	Backing spacer K120198 Lube fitting K78880 Backing ring K85588-90010
D	HM127446 -90120	HM127446	Backing spacer K120178 Lube fitting K78880 Backing ring K85525-90010
E	HM129848 -90142	HM129848 - 90212	Backing spacer K120190 Lube fitting K78880 Backing ring K85095-90010
F	HM133444 -90124	HM133444	Backing spacer K120160 Lube fitting K78880 Backing ring K85516-90010
G (7 x 12)	HM136948 -90124	HM136948 - 90354	Backing spacer K118866 Lube fitting K78880 Backing ring K147766-90010
G (7 x 14)	HM136948 -90170	–	Backing spacer K118866 Lube fitting K78880 Backing ring K95200-90010
GG (7)	H337846	H337846	Backing spacer K118866 Lube fitting K78880 Backing ring K147766-90010
K	M241547	M241547	Backing spacer Lube fitting Backing ring

[1] Code 350 provides a cup O.D. tolerance of +.003 +.004 in. and is used in applications requiring a press fit for the cup.
[2] For reference only.
NOTE: Auxiliary parts are supplied with the overall assembly number – see pages 73 to 76 for listing of component parts.

BEARING MOUNTING ARRANGEMENT 2B

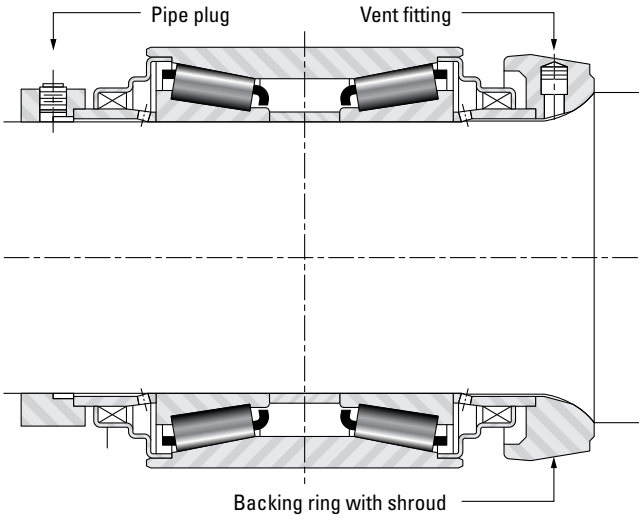

Class	Overall Assembly Standard	Overall Assembly Code 350[1]	Auxiliary Parts Sub Assemblies[2]
B	HM120848 -90086	HM120848	Backing spacer K118891 Pipe plug K46462 Backing ring K86874-90010
C	HM124646 -90078	HM124646	Backing spacer K120198 Pipe plug K46462 Backing ring K85580-90010
D	HM127446 -90118	HM127446	Backing spacer K120178 Pipe plug K46462 Backing ring K85525-90010
E	HM129848 -90126	HM129848	Backing spacer K120190 Pipe plug K46462 Backing ring K85095-90010
F	HM133444 -90122	HM133444	Backing spacer K120160 Pipe plug K46462 Backing ring K85516-90010
G (7 x 12)	HM136948 -90350	HM136948	Backing spacer K118866 Pipe plug K46462 Backing ring K147766-90010
G (7 x 14)	HM136948 -90266	HM136948	Backing spacer K118866 Pipe plug K46462 Backing ring K95200-90010
GG (7)	H337846	H337846	Backing spacer K118866 Pipe plug K46462 Backing ring K147766-90010
K	M241547	M241547	Backing spacer Pipe plug Backing ring

[1] Code 350 provides a cup O.D. tolerance of +.003 +.004 in. and is used in applications requiring a press fit for the cup.
[2] For reference only.
NOTE: Auxiliary parts are supplied with the overall assembly number – see pages 73 to 76 for listing of component parts.

BEARING MOUNTING ARRANGEMENT 3

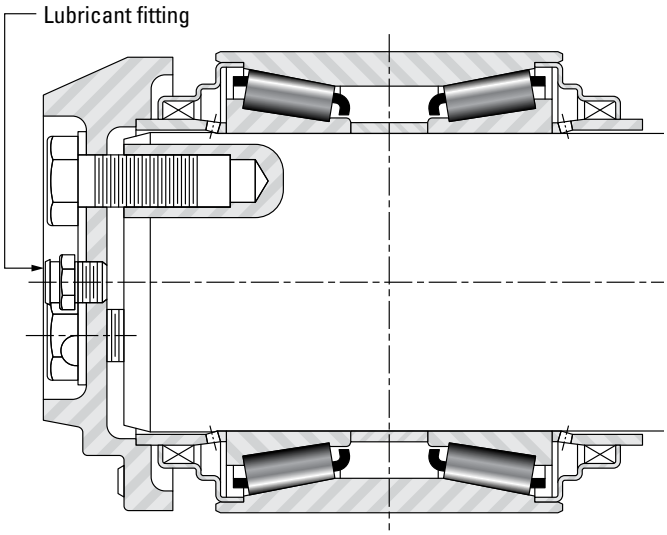

Class	Overall Assembly Standard	Overall Assembly Code 350[1]	Auxiliary Parts Sub Assemblies[2]
B	HM120848 -90091	HM120848 - 90097	Axle end cap K86877-90012
C	HM124646 -90085	HM124646	Axle end cap K86003-90015
D	HM127446 -90093	HM127446	Axle end cap K85521-90011
E	HM129848 -90169	HM129848 90105	Axle end cap K85510-90011
F	HM133444 -90107	HM133444 90175	Axle end cap K85517-90012
G (7 x 12)	HM136948	HM136948	Axle end cap
G (7 x 14)	HM136948 -90283	HM136948	Axle end cap K412057-90011
GG (7)	H337846	H337846	Axle end cap K9519
K	M241547	M241547	Axle end cap

[1] Code 350 provides a cup O.D. tolerance of +.003 +.004 in. and is used in applications requiring a press fit for the cup.
[2] For reference only.
NOTE: Auxiliary parts are supplied with the overall assembly number – see pages 73 to 76 for listing of component parts.

BEARING MOUNTING ARRANGEMENT 3A

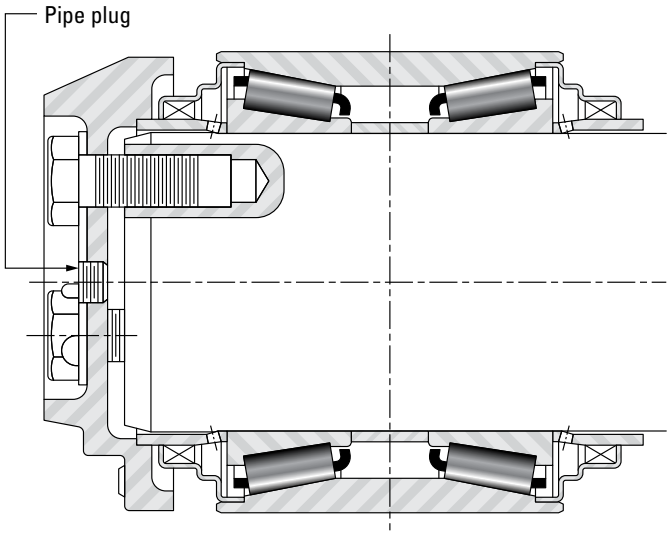

Class	Overall Assembly Standard	Overall Assembly Code 350[1]	Auxiliary Parts Sub Assemblies[2]
B	HM120848 -90121	HM120848 - 90099	Axle end cap K86877-90010
C	HM124646 -90083	HM124646	Axle end cap K86003-90010
D	HM127446	HM127446 - 90107	Axle end cap K85521-90010
E	HM129848	HM129848	Axle end cap K85510-90010
F	HM133444	HM133444 - 90141	Axle end cap K85517-90010
G (7 x 12)	HM136948	HM136948	Axle end cap
G (7 x 14)	HM136948	HM136948 - 90263	Axle end cap K412057-90010
GG (7)	H337846	H337846	Axle end cap K95199
K	M241547	M241547	Axle end cap

[1] Code 350 provides a cup O.D. tolerance of +.003 +.004 in. and is used in applications requiring a press fit for the cup.
[2] For reference only.
NOTE: Auxiliary parts are supplied with the overall assembly number – see pages 73 to 76 for listing of component parts.

BEARING MOUNTING ARRANGEMENT 3B

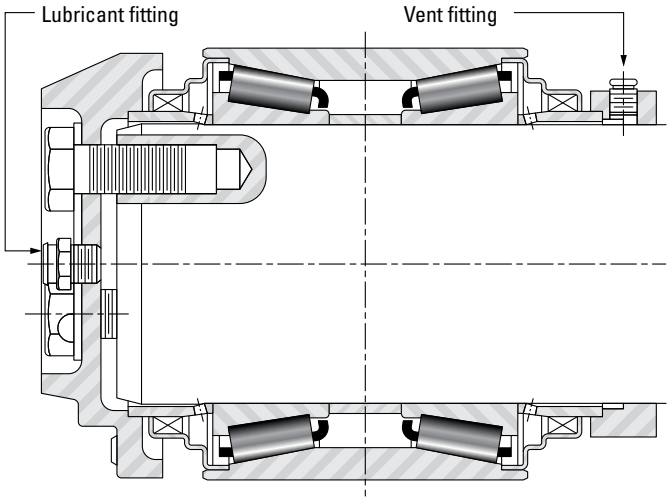

Class	Overall Assembly Standard	Overall Assembly Code 350[1]	Auxiliary Parts Sub Assemblies[2]
B	HM120848 -90115	HM120848	Axle end cap K86877-90012 Backing spacer K118891 Vent fitting K83093
C	HM124646 -90089	HM124646 - 90185	Axle end cap K86003-90015 Backing spacer K120198 Vent fitting K83093
D	HM127446 -90167	HM127446 - 90189	Axle end cap K85521-90011 Backing spacer K120178 Vent fitting K83093
E	HM129848 -90155	HM129848	Axle end cap K85510-90011 Backing spacer K120190 Vent fitting K83093
F	HM133444 -90221	HM133444	Axle end cap K85517-90012 Backing spacer K120160 Vent fitting K83093
G (7 x 12)	HM136948	HM136948	Axle end cap Backing spacer Vent fitting
G (7 x 14)	HM136948 -90291	HM136948	Axle end cap K412057-90011 Backing spacer K118866 Vent fitting K83093
GG (7)	H337846	H337846	Axle end cap K95199 Backing spacer K118866 Vent fitting K83093
K	M241547	M241547	Axle end cap Backing spacer Vent fitting

[1] Code 350 provides a cup O.D. tolerance of +.003 +.004 in. and is used in applications requiring a press fit for the cup.
[2] For reference only.
NOTE: Auxiliary parts are supplied with the overall assembly number – see pages 73 to 76 for listing of component parts.

BEARING MOUNTING ARRANGEMENT 3C

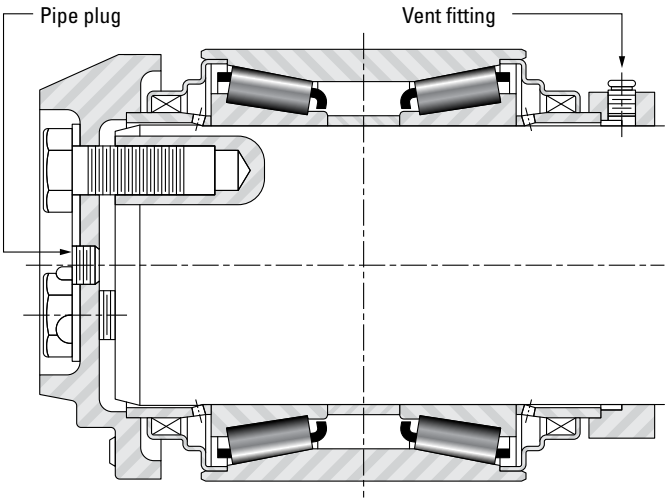

Class	Overall Assembly Standard	Overall Assembly Code 350[1]	Auxiliary Parts Sub Assemblies[2]
B	HM120848 -90083	HM120848 - 90161	Axle end cap K86877-90010 Backing spacer K118891 Vent fitting K83093
C	HM124646	HM124646	Axle end cap K86003-90010 Backing spacer K120198 Vent fitting K83093
D	HM127446	HM127446	Axle end cap K85521-90010 Backing spacer K120178 Vent fitting K83093
E	HM129848	HM129848	Axle end cap K85510-90010 Backing spacer K120190 Vent fitting K83093
F	HM133444	HM133444	Axle end cap K85517-90010 Backing spacer K120160 Vent fitting K83093
G (7 x 12)	HM136948	HM136948	Axle end cap Backing spacer Vent fitting
G (7 x 14)	HM136948	HM136948	Axle end cap K412057-90010 Backing spacer K118866 Vent fitting K83093
GG (7)	H337846	H337846	Axle end cap K95199 Backing spacer K118866 Vent fitting K83093
K	M241547	M241547	Axle end cap Backing spacer Vent fitting

[1] Code 350 provides a cup O.D. tolerance of +.003 +.004 in. and is used in applications requiring a press fit for the cup.
[2] For reference only.
NOTE: Auxiliary parts are supplied with the overall assembly number – see pages 73 to 76 for listing of component parts.

BEARING MOUNTING ARRANGEMENT 4

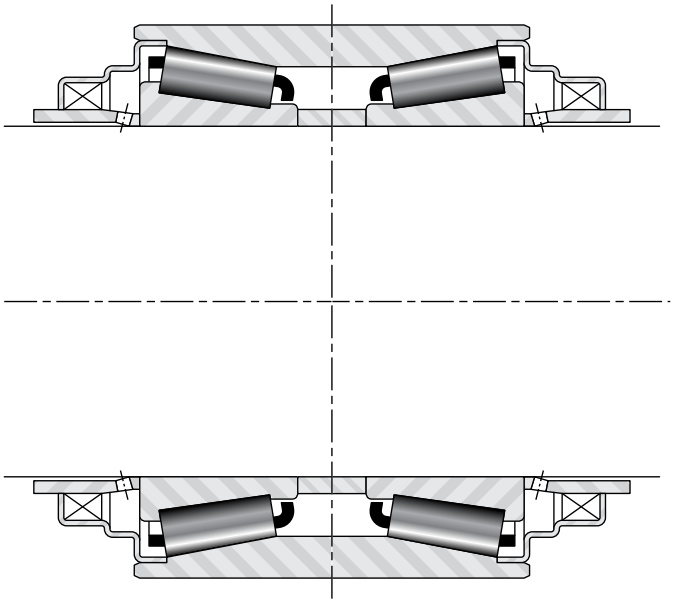

Class	Overall Assembly Standard	Overall Assembly Code 350[1]	Auxiliary Parts Sub Assemblies
B	HM120848 -90014	HM120848 - 90078	–
C	HM124646 -90056	HM124646 - 90068	–
D	HM127446 -90048	HM127446 - 90106	–
E	HM129848 -90054	HM129848 - 90104	–
F	HM133444 -90076	HM133444 - 90128	–
G (7 x 12)	HM136948	HM136948	–
G (7 x 14)	HM136948 -90226	HM136948 - 90256	–
GG (7)	H337846 -90248	H337846 - 90246	–
K	M241547 -90028	M241547 - 90050	–

[1] Code 350 provides a cup O.D. tolerance of +.003 +.004 in. and is used in applications requiring a press fit for the cup.

BEARING MOUNTING ARRANGEMENT 5

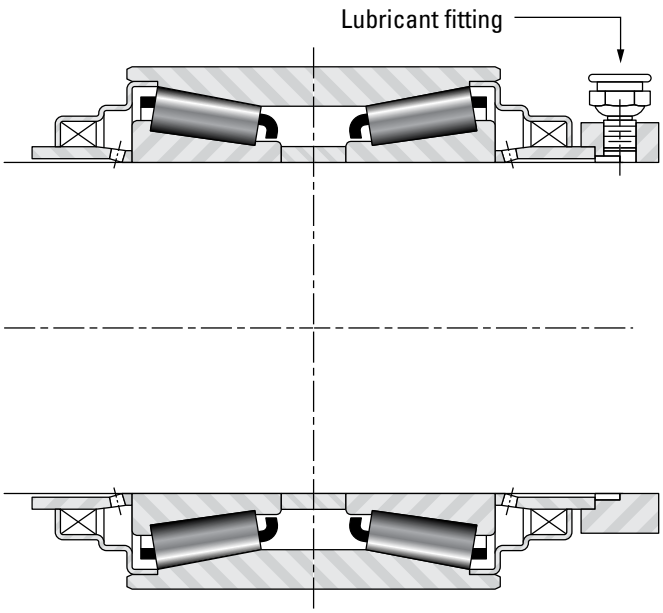

Class	Overall Assembly Standard	Overall Assembly Code 350[1]	Auxiliary Parts Sub Assemblies[2]
B	HM120848 -90074	HM120848	Backing spacer K118891 Lube fitting K78880
C	HM124646 -90108	HM124646	Backing spacer K120198 Lube fitting K78880
D	HM127446 -90168	HM127446	Backing spacer K120178 Lube fitting K78880
E	HM129848 -90154	HM129848	Backing spacer K120190 Lube fitting K78880
F	HM133444 -90184	HM133444	Backing spacer K120160 Lube fitting K78880
G (7 x 12)	HM136948	HM136948	Backing spacer Lube fitting
G (7 x 14)	HM136948 -90284	HM136948	Backing spacer K118866 Lube fitting K78880
GG (7)	H337846	H337846	Backing spacer K118866 Lube fitting K78880
K	M241547	M241547	Backing spacer Lube fitting

[1] Code 350 provides a cup O.D. tolerance of +.003 +.004 in. and is used in applications requiring a press fit for the cup.
[2] For reference only.
NOTE: Auxiliary parts are supplied with the overall assembly number – see pages 73 to 76 for listing of component parts.

BEARING MOUNTING ARRANGEMENT 5A

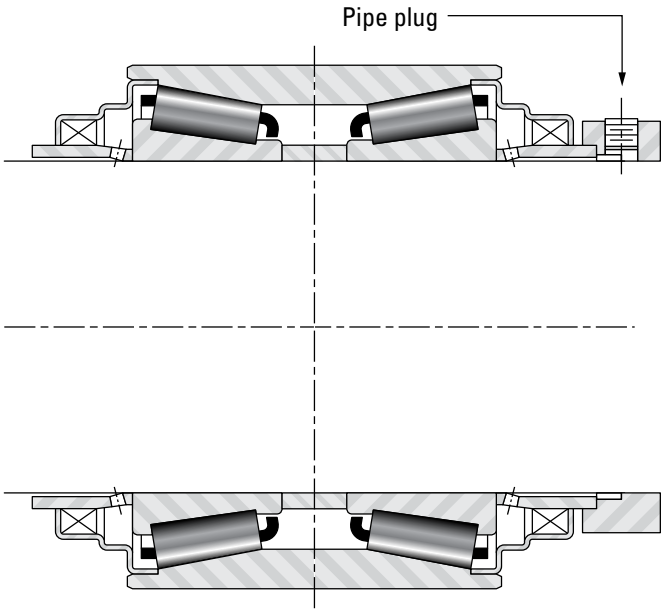

Class	Overall Assembly Standard	Overall Assembly Code 350[1]	Auxiliary Parts Sub Assemblies[2]
B	HM120848 -90088	HM120848	Backing spacer K118891 Pipe plug K46462
C	HM124646 -90084	HM124646	Backing spacer K120198 Pipe plug K46462
D	HM127446 -90114	HM127446	Backing spacer K120178 Pipe plug K46462
E	HM129848 -90120	HM129848	Backing spacer K120190 Pipe plug K46462
F	HM133444 -90126	HM133444	Backing spacer K120160 Pipe plug K46462
G (7 x 12)	HM136948	HM136948	Backing spacer Pipe plug
G (7 x 14)	HM136948 -90238	HM136948	Backing spacer K118866 Pipe plug K46462
GG (7)	H337846	H337846	Backing spacer K118866 Pipe plug K46462
K	M241547	M241547	Backing spacer Pipe plug

[1] Code 350 provides a cup O.D. tolerance of +.003 +.004 in. and is used in applications requiring a press fit for the cup.
[2] For reference only.
NOTE: Auxiliary parts are supplied with the overall assembly number – see pages 73 to 76 for listing of component parts.

BEARING MOUNTING ARRANGEMENT 5B

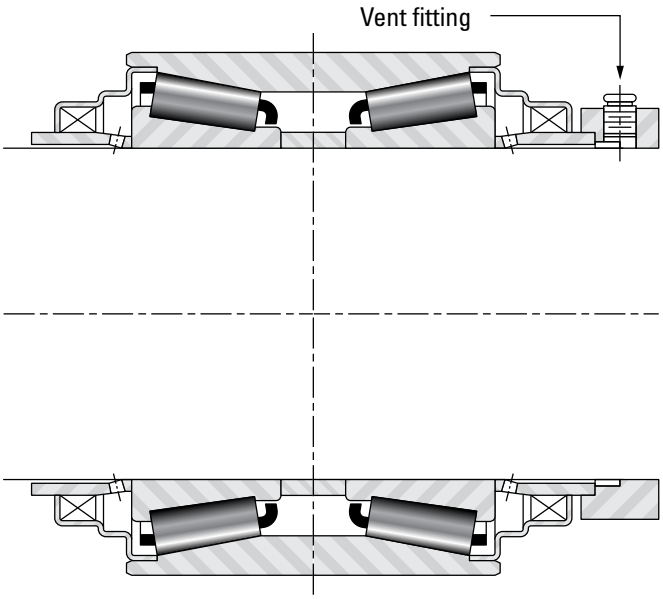

Class	Overall Assembly Standard	Overall Assembly Code 350[1]	Auxiliary Parts Sub Assemblies[2]
B	HM120848 -90082	HM120848 - 90160	Backing spacer K118891 Vent fitting K83093
C	HM124646 -90092	HM124646 - 90184	Backing spacer K120198 Vent fitting K83093
D	HM127446 -90138	HM127446 - 90188	Backing spacer K120178 Vent fitting K83093
E	HM129848 -90156	HM129848	Backing spacer K120190 Vent fitting K83093
F	HM133444 -90220	HM133444	Backing spacer K120160 Vent fitting K83093
G (7 x 12)	HM136948	HM136948	Backing spacer Vent fitting
G (7 x 14)	HM136948 -90292	HM136948	Backing spacer K118866 Vent fitting K83093
GG (7)	H337846	H337846	Backing spacer K118866 Vent fitting K83093
K	M241547	M241547	Backing spacer Vent fitting

[1] Code 350 provides a cup O.D. tolerance of +.003 +.004 in. and is used in applications requiring a press fit for the cup.
[2] For reference only.
NOTE: Auxiliary parts are supplied with the overall assembly number – see pages 73 to 76 for listing of component parts.

BEARING MOUNTING ARRANGEMENT 5C

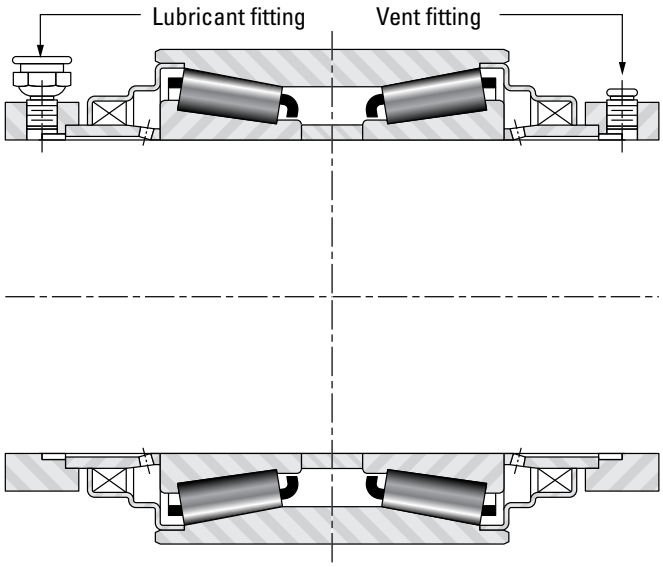

Class	Overall Assembly Standard	Overall Assembly Code 350[1]	Auxiliary Parts Sub Assemblies[2]
B	HM120848 -90106	HM120848 - 90138	Backing spacer K118891[2] Lube fitting K78880 Vent fitting K83093
C	HM124646 -90090	HM124646	Backing spacer K120198[2] Lube fitting K78880 Vent fitting K83093
D	HM127446 -90170	HM127446	Backing spacer K120178[2] Lube fitting K78880 Vent fitting K83093
E	HM129848 -90248	HM129848	Backing spacer K120190[2] Lube fitting K78880 Vent fitting K83093
F	HM133444	HM133444 - 90236	Backing spacer K120160[2] L ube fitting K78880 Vent fitting K83093
G (7 x 12)	HM136948	HM136948	Backing spacer Lube fitting Vent fitting
G (7 x 14)	HM136948	HM136948	Backing spacer K118866[2] Lube fitting K78880 Vent fitting K83093
GG (7)	H337846	H337846	Backing spacer K118866[2] Lube fitting K78880 Vent fitting K83093
K	M241547	M241547	Backing spacer Lube fitting Vent fitting

[1] Code 350 provides a cup O.D. tolerance of +.003 +.004 in. and is used in applications requiring a press fit for the cup.
[2] For reference only.
NOTE: Auxiliary parts are supplied with the overall assembly number – see pages 73 to 76 for listing of component parts.

BEARING MOUNTING ARRANGEMENT 5D

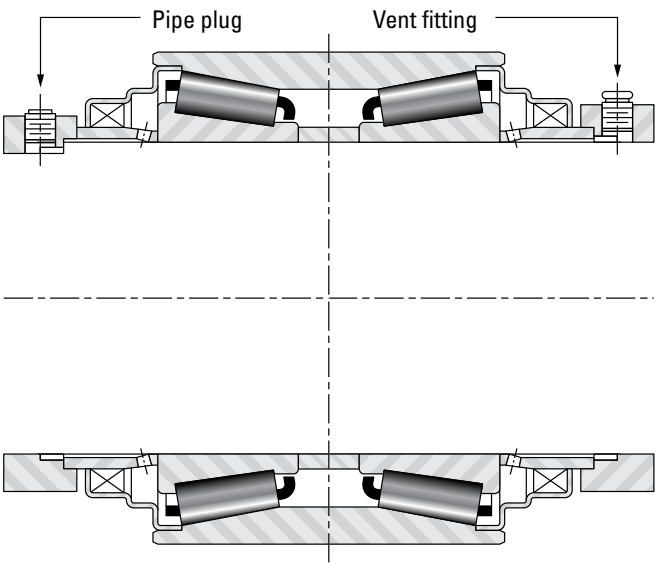

Class	Overall Assembly Standard	Overall Assembly Code 350[1]	Auxiliary Parts Sub Assemblies[2]
B	HM120848 -90084	HM120848 - 90098	Backing spacer K118891[2] Pipe plug K46462 V Vent fitting K83093
C	HM124646	HM124646	Backing spacer K120198[2] Pipe plug K46462 Vent fitting K83093
D	HM127446 -90166	HM127446	Backing spacer K120178[2] Pipe plug K46462 Vent fitting K83093
E	HM129848 -90122	HM129848	Backing spacer K120190[2] Pipe plug K46462 Vent fitting K83093
F	HM133444 -90270	HM133444	Backing spacer K120160[2] Pipe plug K46462 Vent fitting K83093
G (7 x 12)	HM136948	HM136948	Backing spacer Pipe plug Vent fitting
G (7 x 14)	HM136948	HM136948	Backing spacer K118866[2] Pipe plug K46462 Vent fitting K83093
GG (7)	H337846	H337846	Backing spacer K118866[2] Pipe plug K46462 Vent fitting K83093
K	M241547	M241547	Backing spacer Pipe plug Vent fitting

[1] Code 350 provides a cup O.D. tolerance of +.003 +.004 in. and is used in applications requiring a press fit for the cup.
[2] For reference only.
NOTE: Auxiliary parts are supplied with the overall assembly number – see pages 73 to 76 for listing of component parts.

BEARING MOUNTING ARRANGEMENT 6

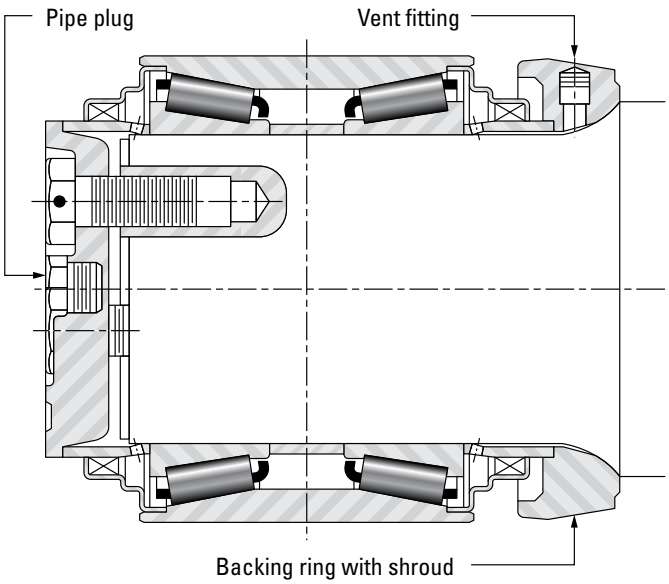

Class	Overall Assembly Standard	Overall Assembly Code 350[1]	Auxiliary Parts Sub Assemblies[2]
B	HM120848 -90065	HM120848 -90105	Recessed end cap K399069-90010 Backing ring K86874-90010
C	HM124646 -90065	HM124646	Recessed end cap K399070-90010 Backing ring K85588-90010
D	HM127446 -90101	HM127446 -90099	Recessed end cap K399071-90010 Backing ring K85525-90010
E	HM129848 -90109	HM129848 -90199	Recessed end cap K399072-90010 Backing ring K85095-90010
F	HM133444 -90117	HM133444	Recessed end cap K399073-90010 Backing ring K85516-90010
G (7 x 12)	HM136948 -90331	HM136948	Recessed end cap K399074-90010 Backing ring K147766-90010
G (7 x 14)	HM136948 -90265	HM136948 -90253	Recessed end cap K399074-90010 Backing ring K95200-90010
GG (7)	H337846	H337846	Recessed end cap K399074-90010 Backing ring K147766-90010
K	M241547	M241547	Recessed end cap Backing ring

[1] Code 350 provides a cup O.D. tolerance of +.003 +.004 in. and is used in applications requiring a press fit for the cup.
[2] For reference only.
NOTE: Auxiliary parts are supplied with the overall assembly number – see pages 73 to 76 for listing of component parts.

BEARING MOUNTING ARRANGEMENT 6A

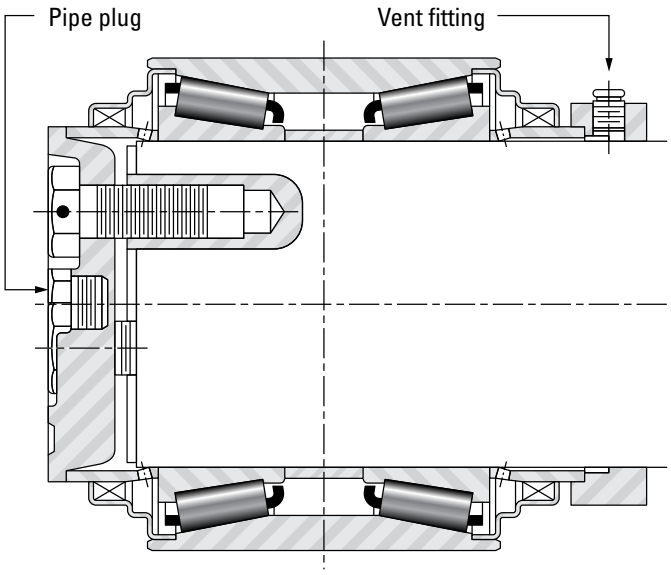

Class	Overall Assembly Standard	Overall Assembly Code 350[1]	Auxiliary Parts Sub Assemblies[2]
B	HM120848 -90081	HM120848	Recessed end cap K399069-90010 Backing spacer K118891 Vent fitting K83093
C	HM124646	HM124646	Recessed end cap K399070-90010 Backing spacer K120198 Vent fitting K83093
D	HM127446 -90157	HM127446	Recessed end cap K399071-90010 Backing spacer K120178 Vent fitting K83093
E	HM129848 -90171	HM129848	Recessed end cap K399072-90010 Backing spacer K120190 Vent fitting K83093
F	HM133444	HM133444	Recessed end cap K399073-90010 Backing spacer K120160 Vent fitting K83093
G (7 x 12)	HM136948	HM136948	Recessed end cap Backing spacer Vent fitting
G (7 x 14)	HM136948 -90295	HM136948	Recessed end cap K399074-90010 Backing spacer K118866 Vent fitting K83093
GG (7)	H337846	H337846	Recessed end cap K399074-90010 Backing spacer K118866 Vent fitting K83093
K	M241547	M241547	Recessed end cap Backing spacer Vent fitting

[1] Code 350 provides a cup O.D. tolerance of +.003 +.004 in. and is used in applications requiring a press fit for the cup.
[2] For reference only.
NOTE: Auxiliary parts are supplied with the overall assembly number – see pages 73 to 76 for listing of component parts.

BEARING MOUNTING ARRANGEMENT 6B

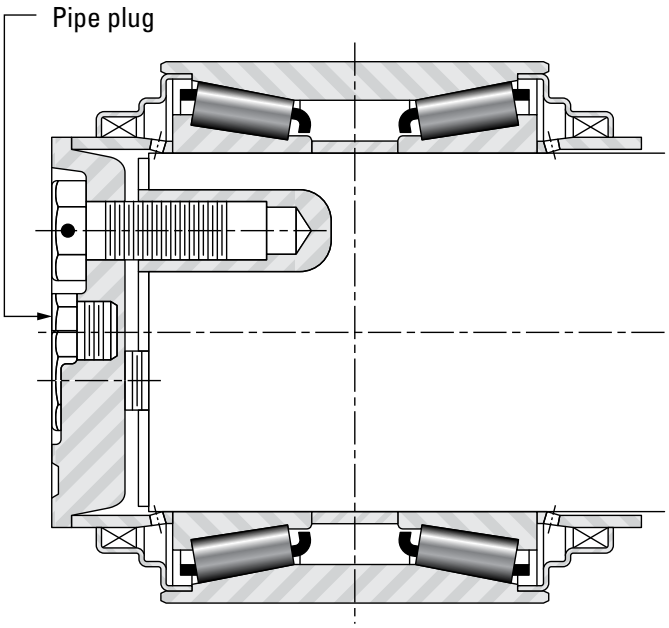

Class	Overall Assembly Standard	Overall Assembly Code 350[1]	Auxiliary Parts Sub Assemblies[2]
B	HM120848 -90037	HM120848 -90077	Recessed end cap K399069-90010
C	HM124646 -90057	HM124646 -90069	Recessed end cap K399070-90010
D	HM127446 -90083	HM127446 -90181	Recessed end cap K399071-90010
E	HM129848 -90101	HM129848	Recessed end cap K399072-90010
F	HM133444 -90087	HM133444 -90169	Recessed end cap K399073-90010
G (7 x 12)	HM136948	HM136948	Recessed end cap
G (7 x 14)	HM136948 -90241	HM136948	Recessed end cap K399074-90010
GG (7)	H337846 -90247	H337846	Recessed end cap K399074-90010
K	M241547 -90029	M241547	Recessed end cap K504075-90010

[1] Code 350 provides a cup O.D. tolerance of +.003 +.004 in. and is used in applications requiring a press fit for the cup.
[2] For reference only.
NOTE: Auxiliary parts are supplied with the overall assembly number – see pages 73 to 76 for listing of component parts.

AXLE END CAP ASSEMBLIES

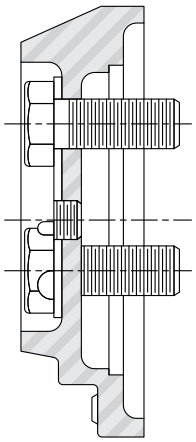

Class	Assembly No	End Cap Part No	Cap Screw (Qty: 3)		Lock Plate	Pipe Plug		Lube Fitting
			Size	Part No		Size	Part No	
B	K86877-90010 K86877-90012	K86877 K86877	¾ in. ¾ in.	K53399 K53399	K84326 K84326	⅜ in.	K86891	K399065
C	K86003-90010 K86003-90015	K86003 K86003	⅞ in. ⅞ in.	K44434 K44434	K84325 K84325	⅜ in.	K86891	K399065
D	K85521-90010 K85521-90011	K85521 K85521	⅞ in. ⅞ in.	K44434 K44434	K80511 K80511	½ in.	K75801	K49022
E	K85510-90010 K85510-90011	K85510 K85510	1 in. 1 in.	K84354 K84354	K80596 K80596	½ in.	K75801	K49022
F	K85517-90010 K85517-90012	K85517 K85517	1 ⅛ in. 1 ⅛ in.	K84351 K84351	K84324 K84324	½ in.	K75801	K49022
G (7 x 12)	K95199-90010 K95199-90011	K95199 K95199	1 ¼ in. 1 ¼ in.	K84398 K84398	K84701 K84701	½ in.	K75801	K49022
G (7 x 14)	K412057-90010 K412057-90011	K412057 K412057	1 ¼ in. 1 ¼ in.	K84398 K84398	K84701 K84701	½ in.	K75801	K49022
GG (7)	K95199-90010 K95199-90011 K95199-90010 K95199	K95199 K95199 K462064 K462064	1 ¼ in. 1 ¼ in. 1 ¼ in. 1 ¼ in.	K84398 K84398 K462063 K462063	K84701 K84701 K84701 K84701	½ in. ½ in.	K75801 K75801	K49022 K49022
K	–	–	–	–	–	–	–	–

RECESSED END CAP ASSEMBLIES

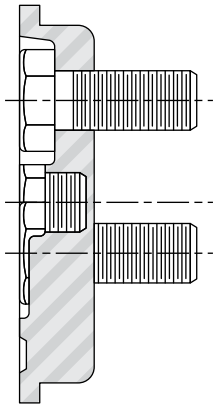

Class	Assembly No	End Cap Part No	Cap Screw (Qty: 3)		Pipe Plug	
			Size	Part No	Size	Part No
B	K399069-90010	K399069	⅝ in.	K344077	½ in.	K75801
C	K399070-90010	K399070	⅝ in.	K344077	½ in.	K75801
D	K399071-90010	K399071	⅞ in.	K33003	½ in.	K75801
E	K399072-90010	K399072	1 in.	K74600	½ in.	K75801
F	K399073-90010	K399073	1 in.	K74600	½ in.	K75801
G (7 x 12)	K399074-90010	K399074	1 ⅛ in.	K74588	½ in.	K75801
G (7 x 14)	K399074-90010	K399074	1 ⅛ in.	K74588	½ in.	K75801
GG (7)	K399074-90010	K399074	1 ⅛ in.	K74588	½ in.	K75801
K	K504075-90010	K504075	1 ⅛ in.	K74588	½ in.	K75801

BACKING RING WITH SHROUD

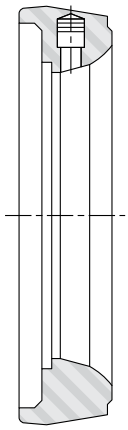

Class	Assembly No	Backing Ring Part No	Vent Fitting Part No
B	K86874-90010	K86874	K89716
C	K85588-90010	K85588	K89716
D	K85525-90010	K85525	K89716
E	K85095-90010	K850095	K89716
F	K85516-90010	K85516	K89716
G (7 x 12)	K147766-90010	K147766	K89716
G (7 x 14)	K95200-90010	K95200	K89716
GG (7)	K147766-90010	K147766	K89716
K	–	–	–

BACKING SPACER

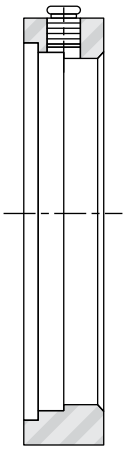

Class	Backing Spacer Part No	With One Of The Following					
		Vent Fitting		Pipe Plug		Lube Fitting	
		Size	Part No	Size	Part No	Size	Part No
B	K118891	¼ in.	K83093	¼ in.	K46462	¼ in.	K78880
C	K120198	¼ in.	K83093	¼ in.	K46462	¼ in.	K78880
D	K120178	¼ in.	K83093	¼ in.	K46462	¼ in.	K78880
E	K120190	¼ in.	K83093	¼ in.	K46462	¼ in.	K78880
F	K120160	¼ in.	K83093	¼ in.	K46462	¼ in.	K78880
G (7 x 12)	K118866	¼ in.	K83093	¼ in.	K46462	¼ in.	K78880
G (7 x 14)	K118866	¼ in.	K83093	¼ in.	K46462	¼ in.	K78880
GG (7)	K118866	¼ in.	K83093	¼ in.	K46462	¼ in.	K78880
K	–	–	–	–	–	–	–

ASSEMBLIES WITH SPECIAL CUP FOR RELUBRICATION TO CENTER OF THE BEARING

Class	Assembly No	Mounting Arrangement	Cup Number	Remarks
B	HM120848-90090 HM120848-90136 HM120848-90150 HM120848-90154 HM120848-90155 HM120848-90156 HM120848-90158	Style 4 Style 4 Style 5B Style 4 Style 6B Style 5B Style 2	HM120817D HM120817D HM120817D HM120817YD HM120817YD HM120817YD HM120817YD	Oil hole and groove on cup -special clearance - E29536 Oil hole and groove on cup - E31318 Oil hole and groove on cup - no dwg 2 ¼ in. NPT holes in cup - E33239 2 ¼ in. NPT holes in cup - E34745 2 ¼ in. NPT holes in cup - E34746 2 ¼ in. NPT holes in cup - E34750
C	HM124646-90158	Style 4	HM 124618YD	2 ¼ in. NPT holes in cup - E33239
D	HM127446-90153 HM127446-90152 HM127446-90270 HM127446-90172 HM127446-90216	Style 1A Style 2 Style 2 Style 4 Style 5B	HM127415D HM127415D HM127415D HM127415D HM127415D	Oil hole and groove on cup - E30994 Oil hole and groove on cup - E30994 Oil hole and groove on cup - special clearance - no dwg Oil hole and groove on cup - E31318 Oil hole and groove on cup - E33227
E	HM129848-90174 HM129848-90210	Style 2 Style 5B	HM129814D HM129814D	Oil hole and groove on cup - E31319 Oil hole and groove on cup - no dwg
F	HM133444-90177 HM133444-90176 HM133444-90248	Style 1A Style 2 Style 4	HM133416D HM133416D HM133415YD	Oil hole and groove on cup - E30994 Oil hole and groove on cup - E30994 2 ¼ in. NPT holes in cup - E33239
G	HM136948-90345 HM136948-90344 HM136948-90304 HM136948-90296	Style 1A (7 X 12) Style 2 (7 X 12) Style 2 (7 X 14) Style 4 (7 X 14)	HM136916D HM136916D HM136916D HM136916D	Oil hole and groove on cup - E30994 Oil hole and groove on cup - E30994 Oil hole and groove on cup - E31319 Oil hole and groove on cup - E31318
K	M241547-90070	Style 4	M241513D	Oil hole and groove on cup - E37462

ASSEMBLIES WITH NON-STANDARD - REDUCED WIDTH

Class	Assembly No	Mounting	Cup Number	Remarks
C	HM124646-90132	Style 2	HM124616XD	Cone spacer HM124646XC Backing ring K85588-90010
	HM124646-90116	Style 4	HM124616XD	Cone spacer HM124646XC
	HM124646-90140	Style 4	HM124616XD	Cone spacer HM124646XC Code 350 tolerances
	HM124646-90133	Style 6	HM124616XD	Cone spacer HM124646XC Recessed end cap K399070-90010 Backing ring K85588-90010
D	HM127446		HM127417XD	Cone spacer HM127446XB
E	HM129848-90218	Style 2	HM129813XD	Cone spacer HM129848XB Backing ring K85095-90010
	HM129848-90176	Style 4	HM129813XD	Cone spacer HM129848XB
	HM129848-90219	Style 6	HM129813XD	Cone spacer HM129848XB Recessed end cap K399072-90010 Backing ring K85095-90010
	HM129848-90177	Style 6B	HM129813XD	Cone spacer HM129848XB Recessed end cap K399072-90010
F	HM133444-90190	Style 2	HM133413XD	Cone spacer HM133444XE Backing ring K85516-90010 Code 350 tolerances

09-25 Order No. 1013 | Timken® is a registered trademark of The Timken Company. | © 2025 The Timken Company | Printed in U.S.A.

To view more Timken catalogs, go to www.timken.com/catalogs for interactive versions, or to download a catalog app for your smart phone or mobile device scan the QR code or go to timkencatalogs.squawqr.com.

TIMKEN

The Timken team applies their know-how to improve the reliability and performance of machinery in diverse markets worldwide. The company designs, makes and markets bearings, gear drives, automated lubrication systems, belts, brakes, clutches, chain, couplings, linear motion products and related industrial motion rebuild and repair services.

Price: USD $75

Stronger. By Design.

www.timken.com