DRIVES®
CHAIN BY TIMKEN



DRIVES® CHAIN PRODUCT

ABOUT DRIVES

Drives, the world leader in manufactured chain products, offers a broad line of superior quality precision roller chains, attachment chains and engineered conveyor chains for the world's toughest applications. Providing the most comprehensive line of quality chain products, Drives delivers leading edge solutions with nearly 60 years of advanced engineering knowledge and experience. Committed to manufacturing world class products, outstanding engineering and manufacturing support and total customer service, Drives utilizes the highest quality materials, technologies, equipment and craftsmanship to produce quality products. Drives manufacturing facility is located in Fulton, Illinois.



DRIVES® CHAIN PRODUCT CATALOG INDEX

DRIVES OVERVIEW....1
CHAIN PRODUCT INTRODUCTION....2
HOW TO USE THIS CATALOG....4
DISCLAIMER/CONTACT INFORMATION....5
WARNINGS....5
TECHNICAL SECTION....7
Chain Selection....8
Roller Chain Dimensions and Horsepower Tables – Inch....16
Roller Chain Dimensions and Horsepower Tables – Inch · Heavy Series....23
Sprocket Data – Inch....28
Roller Chain Dimensions and Horsepower Tables – Metric....31
Roller Chain Dimensions and Horsepower Tables – Metric · Heavy Series....38
Sprocket Data – Metric....43
Corrosion Resistant Chain Product Selection Guide....46
Installation and Maintenance....54
Lubrication....56
Troubleshooting....64
Chain Tools....65
Engineering Conversions....67
Glossary....69
PRECISION ROLLER CHAIN PRODUCT CHARTS....77
Carbon Steel....78
Heavy Series Roller Chain Products....92
Oil Field Roller Chain....94
Extended Life CHP® Series Chain....103
Corrosion Resistant Chains....104
Specialty Chains....109
ATTACHMENT CHAIN PRODUCT CHARTS....115
ENGINEERED CHAIN PRODUCT CHARTS....125
Engineered Class – General....126
Engineered Class Chains – By Industry....137
Automotive....138
Material Handling....139
Food Processing....143
Forest and Paper....147
Metal Processing....157
Mining Industry....161
Sugar Mill Chain....163
Agricultural Conveyor Chain Products....167

CHAINS ENGINEERED TO ENHANCE PERFORMANCE

From corrosive environments to heavy shock loads, we engineer the optimum precision roller chain for your application to help increase uptime and reduce maintenance costs. Our entire range of American National Standards Institute (ANSI) standard roller chains, specialty chains and attachment chains meet or exceed ANSI/ASME standard B29.1. Our oil field chains meet or exceed the American Petroleum Institute's (API) 7F8 requirements, and our engineered class chains are manufactured utilizing state-of-the-art equipment. We are ISO 9001: 2000 registered and are an API Quality registered firm.

Updates are made periodically to this catalog. Visit www.timken.com for the most current version of the Drives – Chain Products catalog.

HIGH-PERFORMANCE ROLLER CHAIN IN STOCK AND WAITING FOR YOU TO PUT IT TO THE TEST

Drives roller chain is manufactured in Fulton, Ill., to meet or exceed ANSI/ASME standard B29.1 and the American Petroleum Institute's 7F8 requirements. Drives is a leader in the industry that produces roller chain products for some of the world's toughest industries:

- Oil and Gas
- Forest Products
- Food and Beverage
- Paper
- Packaging
- Mining
- Metal Processing



ROLLER CHAIN FEATURES

WIDE WAIST

The wide-waist design of 60H and larger chains is manufactured with maximized ball heights from special alloy steels for added strength. The wide link plate profile improves stress distribution, leading to improved fatigue resistance and enhanced performance.

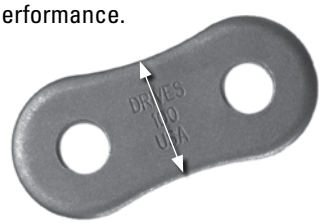

SOLID ROLLERS

We use solid rollers on all carbon roller chains. The solid roller allows for smooth rotation on the bushing reducing the impact load as the chain engages the sprocket tooth.



FACTORY PRELOADED AT 50 PERCENT MUTS

Our chain is preloaded to 50 percent of minimum ultimate tensile strength (MUTS), which is especially important for applications involving fixed center-to-center sprockets without take-ups. Applications can withstand shock loads up to 50 percent of the chain's MUTS without premature elongation.

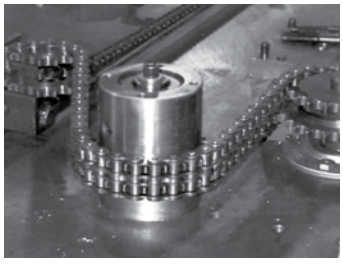

HEAT TREATMENT

Rigorous process controls and state-of-the-art heat-treating furnaces provide consistent quality in all our chain components. This results in optimum toughness and resistance to wear.



PRELUBRICATION

After final assembly, we hot-dip the roller chain in a spec lubricant. This process ensures that all the load-bearing surfac are initially protected from metal-to-metal contact, improving t wear life of the chain.

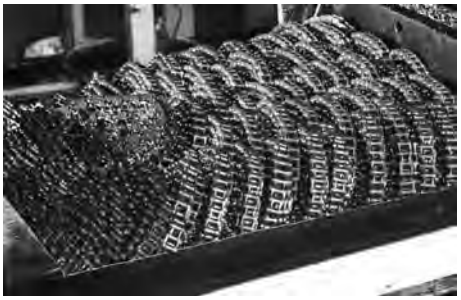

AUTOMATED ASSEMBLY

Our roller chain assembly methods ensure consistent processes and proper assembly of chain components.



SHOT PEENED PARTS

All precision roller chain rollers and link plates are shot peened for greater fatigue strength.

CONNECTING LINKS

Standard connecting links are used when roller chain is operating under normal conditions. For severe applications, press fit connecting links are suggested. Spring-clip style connecting links are used for sizes 60H and smaller. Sizes 80 – 180H use a special hardened hook cotter. Coated T-pins are used on 200, 264 and 240.



Close style spring clip.



Hook cotter connecting link.



Coated T-pins used on the connecting links.

OFFSET LINKS

Offset links are used when the chain length is an odd number of pitches; however, their fatigue strength is lower than standard chain links. Using offsets should be avoided when possible.



Offset link.

HOW TO USE THIS CATALOG

We designed this catalog to help you find the Drives chain product that is best suited to your specifications.

Drives offers an extensive range of chain and accessories. For your convenience, size ranges are indicated in inches and millimeters. Contact your Drives engineer to learn more about our complete line for the special needs of your application.

This publication contains dimensions, tolerances and load ratings, as well as technical sections for chain selection for both drive and conveyor systems. It provides valuable assistance in the initial consideration of the type and characteristics of chain that may best suit your particular needs.



STORAGE

Drives suggests the following storage guidelines for our chain products:

- Unless directed otherwise by Drives, products should be kept in their original packaging until they are ready to be placed into service.
- Do not remove or alter any labels or stencil markings on the packaging.
- Products should be stored in such a way that the packaging is not pierced, crushed or otherwise damaged.
- The relative humidity should be maintained below 60 percent and the surfaces should be dry.
- The storage area should be kept free from airborne contaminants such as, but not limited to, dust, dirt, harmful vapors, etc.

Due to the fact that Drives is not familiar with your particular storage conditions, we strongly suggest following these guidelines. However, you may be required by circumstances or applicable government requirements to adhere to stricter storage requirements.

When you receive the chain shipment, do not remove products from their packaging until they are ready for use so they do not become corroded or contaminated.

Store the chain in an appropriate atmosphere so they remain protected for the intended period.





⚠ WARNING
Failure to observe the following warnings could create a risk of death or serious injury.

Proper maintenance and handling practices are critical.

Always follow installation instructions and maintain proper lubrication.

⚠ WARNING
Failure to observe the following warnings could create a risk of death or serious injury.

Follow your lock-out tag-out and power off procedures before lubricating or servicing a chain system.

CAUTION
Failure to follow these cautions may result in property damage.

Use only new subassemblies for assembling chain strands.

Do not use individual chain components and do not mix subassemblies from different chain manufacturers.

Do not reuse sections from damaged chains. Damage from overloading or yielding may be present though not apparent.

Do not use worn chain or install new chain on worn sprockets.

DISCLAIMER

This catalog is provided solely to give you analysis tools and data to assist you in your product selection. Product performance is affected by many factors beyond the control of Drives. Therefore, you must validate the suitability and feasibility of all product selections for your applications.

Drives products are sold subject to Timken terms and conditions of sale, which include our limited warranty and remedy. You can find these at http://www.timken.com/en-us/purchase/Pages/TermsandConditionsofSale.aspx.

Please consult with your Drives engineer for more information and assistance.

Every reasonable effort has been made to ensure the accuracy of the information in this writing, but no liability is accepted for errors, omissions or for any other reason.

All metric information is a conversation from imperial data.

Warnings for this product line are included in this catalog and posted on www.timken.com/warnings.

For More Information:
Phone: 1-800-435-0782
Fax: 1-815-589-4420
www.timken.com/drives

NOTE

All formulas and table data listed in this catalog are based on Imperial Units. All metric information provided is based on the conversion of that data.

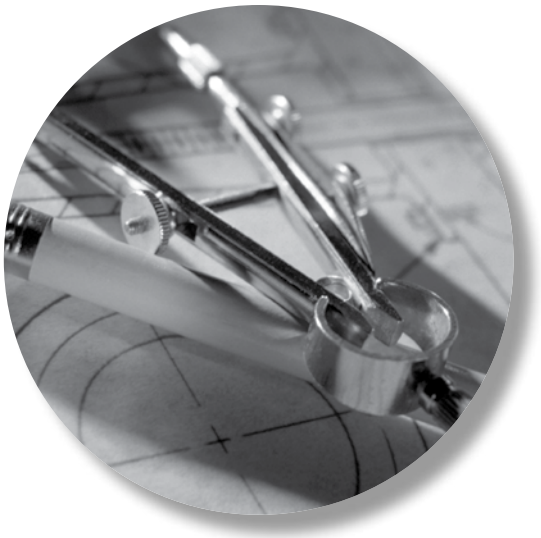

TECHNICAL

This section contains information on chain selection. Please contact your Drives representative with questions.

Chain Selection 8
- Roller Chain Dimensions and Horsepower Tables – Inch 16
- Roller Chain Dimensions and Horsepower Tables – Inch · Heavy Series 23
- Sprocket Data – Inch 28
- Roller Chain Dimensions and Horsepower Tables – Metric 31
- Roller Chain Dimensions and Horsepower Tables – Metric · Heavy Series 38
- Sprocket Data – Metric 43

Corrosion Resistant Chain Product Selection Guide 46
Installation and Maintenance 54
Lubrication 56
Troubleshooting 64
Chain Tools 65
Engineering Conversions 67
Glossary 69

CHAIN SELECTION

HORSEPOWER RATING

The horsepower or kilowatt rating in figs. 1 or 2 on page 11 and 12 are based on the following conditions:

- Chains are operated under ordinary conditions. The ambient temperature range must be between 15° F (-9.5° C) and 140° F (60° C). They should not be used in an atmosphere in which abrasive dust or corrosive gas is present or where the humidity is high.
- Two transmission shafts are in a horizontal position and the chains are properly installed.
- Suggested lubrication system and oil are used.
- Load does not change significantly during transmission. The service factors given in table 3 on page 10 should be taken into account when the chains are used under various operating conditions. The load conditions will affect the life of the chain.
- To estimate the service life of a multiple-strand chain, the multiple-strand factor given in table 1 must be used. When the chain length is 100 pitches and the above conditions are met, a service life of approximately 15,000 hours can be expected.

NOTE

All formulas and table data listed in this catalog are based on Imperial Units. All metric information provided is based on the conversion of that data.

PROCEDURES FOR SELECTING ROLLER CHAIN

1. The following factors must be considered when selecting roller chain:
   - Source of input power.
   - Drive machine type of driven equipment.
   - Horsepower to be transmitted.
   - Revolutions per minute (RPM) of driving and driven shafts.
   - Diameter of driving and driven shafts.
   - Center distance of the shafts.
2. Use table 3 on page 10 to obtain the service factor.
3. Multiply the horsepower or kilowatt value by the service factor to obtain the design horsepower or kilowatt value.
4. Use figs. 1 or 2 on pages 11 and 12 and the horsepower or kilowatt tables to obtain the appropriate chain number of teeth for small sprockets. Refer to the number of revolutions of the high-speed shaft (the driving shaft when the speed is reduced; the driven shaft when the speed is increased) and the design horsepower or kilowatt value. For smoother chain drive, a small pitch chain is suggested. If a single-strand chain does not satisfy the transmission requirements, use a multiple-strand chain. If there are space limitations, a multiple-strand roller chain with a smaller pitch may be used.
5. After determining the number of teeth necessary for the small sprocket, be sure the sprocket diameter satisfies the space limitations.
6. The number of teeth for the large sprocket is determined by multiplying the number of teeth for the small sprocket by the speed ratio. More than 15 teeth on the small sprocket is suggested. The number of teeth for the large sprocket should be less than 120. By reducing the number of teeth for the small sprocket, the number of teeth for the large sprocket can be reduced.

TABLE 1. MULTIPLE-STRAND FACTOR

Number of Roller Chain Strands	Multiple-Strand Factor
2	1.7
3	2.5
4	3.3
5	3.9
6	4.6

POWER, CHAIN PULL, TORQUE AND CHAIN LENGTH EQUATIONS

BASIC FORMULA FOR CHAIN DRIVE

Inch

$$H = \frac{P \times S}{33{,}000} \qquad H = \frac{T_{ft} \times n}{5{,}252} \qquad H = \frac{T_{in} \times n}{63{,}025}$$

$$P = \frac{H \times 33{,}000}{S} \qquad P = \frac{H \times 396{,}000}{C \times N_S \times n} \qquad P = \frac{H \times 126{,}050}{D \times n} \qquad P = \frac{T_{ft} \times 24}{D} \qquad P = \frac{T_{in} \times 2}{D}$$

$$T_{ft} = \frac{H \times 5{,}252}{n} \qquad T_{in} = \frac{H \times 63{,}025}{n}$$

$$S = \frac{C \times N_S \times n}{12}$$

Metric

$$H_M = \frac{P_M \times S_M}{60} \qquad H_M = \frac{T_{M,n} \times n}{9.544}$$

$$P_M = \frac{H_M \times 60}{S_M} \qquad P_M = \frac{H_M \times 60{,}000}{C_M \times N_S \times n} \qquad P_M = \frac{H_M \times 19{,}088}{D_M \times n} \qquad P_M = \frac{T_{M,\,m} \times 2000}{D_M}$$

$$T_{Mm} = \frac{H_M \times 9.544}{n} \qquad T_{M,mm} = \frac{H_M \times 9{,}544}{n}$$

$$S_M = \frac{C_M \times N_S \times n}{1000}$$

Inch & Metric

$$L = \frac{N_S + N_L}{2} + (2 \times C_D) + \frac{((N_L - N_S)/6.28)^2}{C_D}$$

(**)Any fraction of L is counted as one pitch
(**)Subscript M denotes metric units.

TABLE 2. NOMENCLATURE KEY

Nomenclature	Units	Description
H	[HP, kW]	Power
P	[lb_f, kN]	Chain Pull
S	[ft/min, m/min]	Chain Speed
T_{ft}	[ft-lb_f, m-kN]	Torque
T_{in}	[in-lb_f, mm-kN]	Torque
n	[rpm]	Sprocket Speed
C	[in, mm]	Chain Pitch
D	[in, mm]	Small Sprocket Pitch Diameter
C_D	[pitches]	Center Distance Between Sprockets
L	[pitches]	Total Chain Length
N_S		Small Sprocket No. of Teeth
N_L		Large Sprocket No. of Teeth

TABLE 3. SERVICE FACTORS FOR ROLLER CHAIN DRIVES

Types of Driven Load	Load Classifications	Type of Input Power		
		Internal Combustion Engine with Hydraulic Drive	Electric Drive Motor	Internal Combustion Engine with Mechanical Drive
Smooth Load	Agitators – Pure liquid	1.0	1.0	1.2
	Conveyors – Uniformly loaded or fed (apron, assembly, belt, flight, oven, screw)			
	Fans – Centrifugal and light, small diameter			
	Machines – All types with uniform, non-reversing loads			
Moderate Shock	Clay-Working Machinery – Pug mills	1.2	1.3	1.4
	Conveyors – Heavy duty and NOT uniformly loaded (apron, assembly, belt, flight, oven, screw)			
	Food Industry – Beet slicers, dough mixers, meat grinders			
	Grinding Machine – All types with moderate shock and non-reversing loads			
	Textile Industry – Calendars, dyeing machinery, mangles, nappers, soapers, spinners, tenter frames			
Heavy Shock	Clay-Working Machinery – Brick press, briqueting machinery	1.4	1.5	1.7
	Conveyors – Reciprocating and shaker			
	Hammer Mills			
	Machine Tools – Punch press, shears, plate planers			
	Mills (Rotary Type) – Ball, cement kilns, rod mills, tumbling mills			
	Textile Industry – Carding machinery			

SELECTION OF CHAIN AND SMALL SPROCKET

CHAIN PITCH

The smallest applicable pitch is desirable for quiet operation and high speed.

NUMBER OF SPROCKET TEETH

For a given chain pitch and shaft to transmit a given horsepower, the effect of increasing the number of teeth in the sprocket is to increase the chain linear speed and decrease the chain pull proportionally. This results in a decrease of the chordal action, which results in a quiet drive with less impact.

Usually, large sprockets should not exceed 120 teeth although many successful drives use sprockets with 150 teeth and more.

SELECTION OF LARGE SPROCKET

After the small sprocket has been selected, the number of teeth in the large sprocket is determined by the specified ratio of the shaft speeds.

HORSEPOWER VS. RPM TABLE

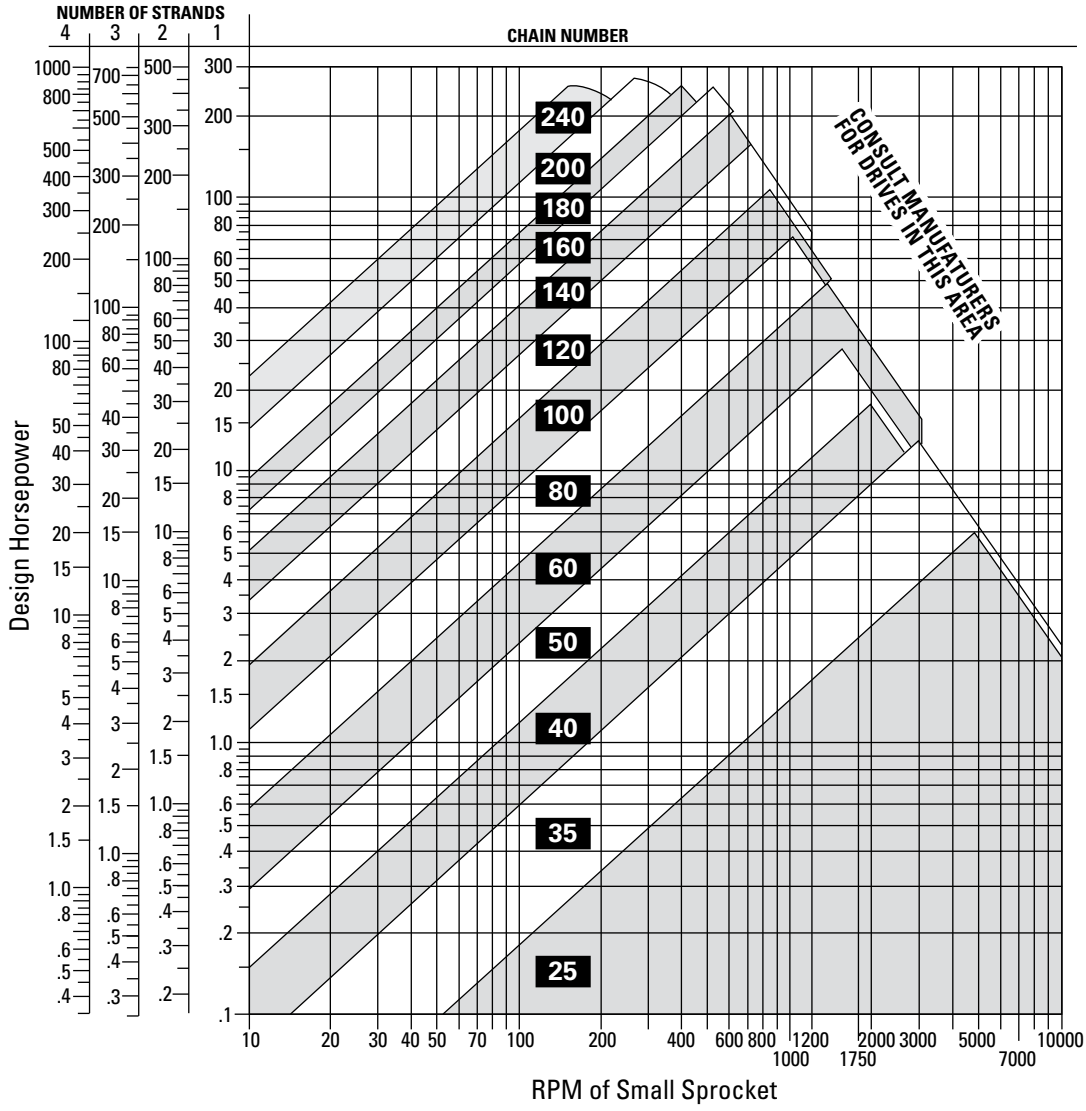

NOTE: The maximum horsepower rating specified in each of the strand columns is not limiting for chain drives. Consult your Drives representative on those applications that are above the horsepower range of the chart.
NOTE: All measures are based on imperial measurements. Metric measurements are conversions.

Fig. 1. Roller chain pitch selection.

KILOWATT VS. RPM TABLE

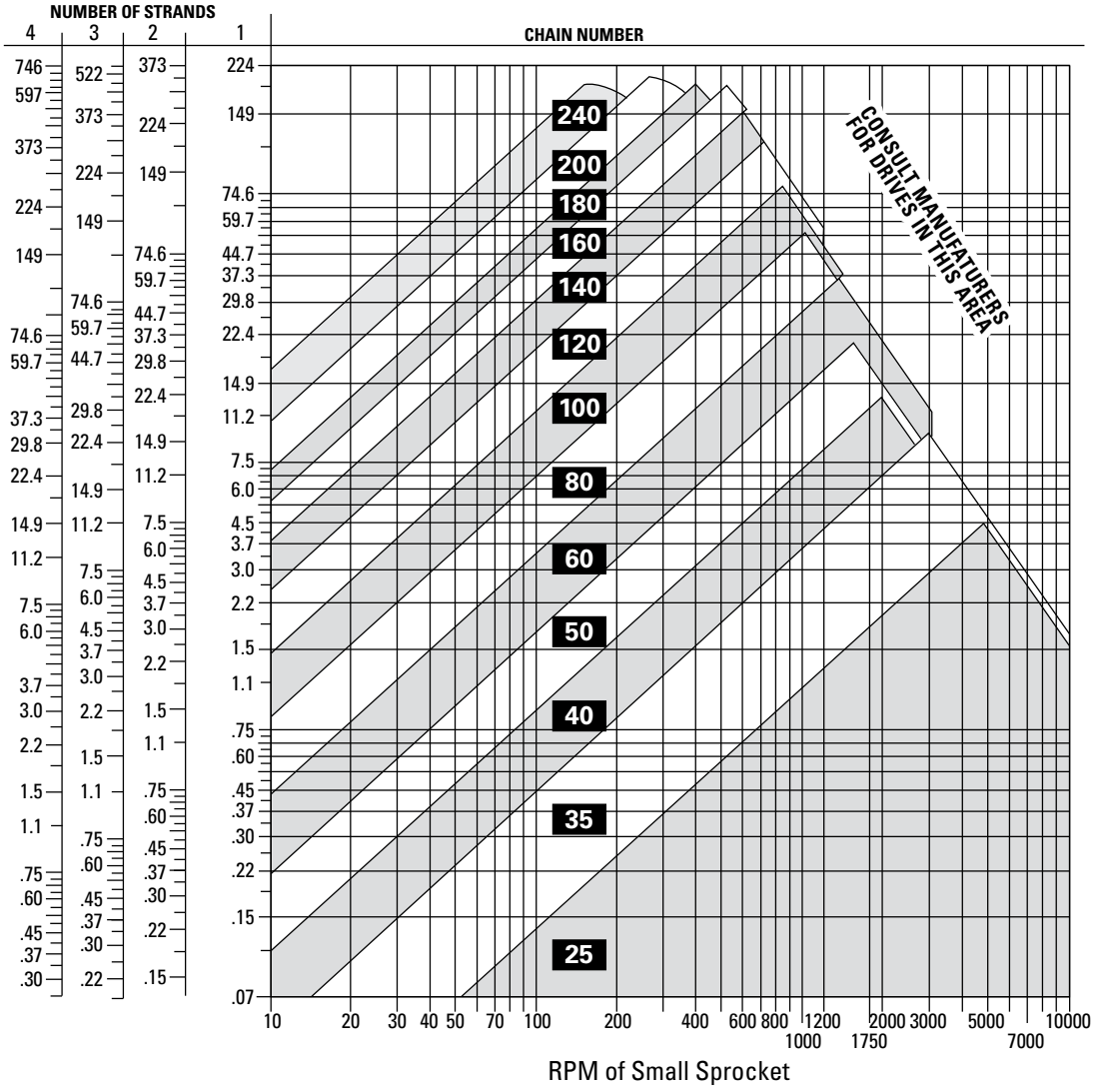

NOTE: The maximum horsepower rating specified in each of the strand columns is not limiting for chain drives. Consult your Drives representative on those applications that are above the horsepower range of the chart.
NOTE: All measures are based on imperial measurements. Metric measurements are conversions.

Fig. 2. Roller chain pitch selection.

DRIVE SELECTION PROCEDURE

Selection Example (1)

Question 1: A conveyor with 50 HP (40 kW) is driven by a 100 RPM electric motor. How should you select the chain and sprockets?

Answer:

1. Seek the service factor, 1.0, from table 3 on page 10.

   Power to be transmitted x service factor = design horsepower

   50 HP X 1.0 = 50 HP 37.3 kW x 1.0 = 37.3 kW

2. Refer to figs. 1 or 2 on pages 11 and 12 for 100 RPM 50 HP (40 kW) and 160 chain with sprocket 18T to 22T is obtained.
3. Check horsepower (kilowatt) tables for chain 160, and as you see, the horsepower ratings of 160-19T with speed of 100 RPM is 50.48 HP (37.64 kW), which is satisfactory.
4. The following are selected:

   Chain no. 160 small sprocket 160-19T.

Selection Example (2)

Question 2: The number of revolutions for a drive is 500 RPM and the power to be transmitted is 13 HP (9.69 kW). The RPM is reduced to 125 (¼). The center distance should be 11.00 in. (279.4 mm) with a space limitation of 19.00 in. (482.6 mm), and a uniform load. How should you select the chain and sprocket for this application?

Answer:

1. Design horsepower (kilowatt) is computed as follows:

   Design horsepower: 13 HP X 1.0 = 13 HP

   Design kilowatt: 9.69 kW x 1.0 = 9.69 kW

2. Select the chain and the number of teeth for the sprocket by referring to figs. 1 or 2 on pages 11 and 12.

   60-18T has been selected.

3. Speed reduction ratio is $0.25 = \frac{125\ \text{RPM}}{500\ \text{RPM}}$

   Therefore, the number of teeth in the large sprocket is

   $$72\text{T} = \frac{18\ \text{T}}{0.25}$$

4. The outside diameter of the 18T is 4.685 in. (119 mm) and the 72T is 17.60 in. (447.04 mm).

   The space required for this arrangement is:

   $$\frac{4.685\ \text{in.} + 17.60\ \text{in.}}{2} + 11\ \text{in.} = 22.14\ \text{in.}$$

   $$\frac{119\ \text{mm} + 447.04\ \text{mm}}{2} + 279.4\ \text{mm} = 562.42\ \text{mm}$$

   which can not be contained in the 19 in. (482.6 mm).

5. Multiple-strand chain is selected. 50-2 16T to 20T is selected using fig. 1. (fig. 2.).

   $$\frac{10\ \text{HP x } 1.0}{1.7} = 5.88\ \text{HP}$$

   $$\frac{7.46\ \text{kW x } 1.0}{1.7} = 4.39\ \text{kW}$$

   (1.7 is multiple strand factor)

   Refer to the horsepower tables. 50-2, 18T is obtained. Its outside diameter is 3.90 in. (99.1 mm). The large sprocket is:

   $72\text{T} = \frac{18\ \text{T}}{0.25}$ outside diameter 14.69 in. (373.13 mm)

   However, this selection cannot be contained in the space.

6. Triple-strand chain is selected in the same manner as above 50-3, 13T and 52T are obtained. The outside diameter of sprockets is 2.87 in. (72.99 mm), and 10.67 in. (271.02 mm) respectively.

   $$\frac{2.87\ \text{in.} + 10.67\ \text{in.}}{2} + 11\ \text{in.} = 17.77\ \text{in.}$$

   $$\frac{72.99\ \text{mm} + 271.02\ \text{mm}}{2} + 279.4\ \text{mm} = 451.41\ \text{mm}$$

   can be contained in the space required.

The chain and sprockets selected are 50-3, 13T and 52T.

SLOW SPEED CALCULATION

When the chain speed (S) is less than 160 ft/min, select a roller chain size smaller than the chain chosen from the horsepower rating method mentioned above.

Estimate chain size: If horsepower is not known use the following formulas to determine HP:

$$H = \frac{P \times S}{33{,}000} \qquad H_M = \frac{P_M \times S_{Mm}}{60}$$

$$H = \frac{T_{ft} \times n}{5{,}252} \qquad H_M = \frac{T_{MM} \times n}{9.544}$$

$$H = \frac{T_{in} \times n}{63{,}025} \qquad H_M = \frac{T_{Mmm} \times n}{9{,}544}$$

Once the HP is known, use figs. 1 or 2 on pages 11 and 12 to estimate the chain size. If the RPM is less than 10 RPM than use 10 RPM as starting point.

If the chain pull is not known directly, please use one of the basic equations shown.

$$P = \frac{H \times 33{,}000}{S} \qquad P_M = \frac{H_M \times 60}{S_M}$$

$$P = \frac{H \times 396{,}000}{C \times N_S \times n} \qquad P_M = \frac{H_M \times 60{,}000}{C_M \times N_S \times n}$$

$$P = \frac{H \times 126{,}050}{D \times n} \qquad P_M = \frac{H_M \times 19{,}088}{D_M \times n}$$

$$P = \frac{T_{ft} \times 24}{D} \qquad P_M = \frac{T_{Mm} \times 2{,}000}{D_M}$$

$$P = \frac{T_{in} \times 2}{D}$$

Chain Selection Process

- Calculate Chain Pull (P_C) using one of the following formulas.
- Calculate the chain speed (S)

$$S = \frac{C \times N_S \times n}{12}$$

- Adjust the P_C chain for speed

TABLE 4. CHAIN SPEED

Chain speed	Speed Coefficient
Less than 50 ft./min. (15.24 M/min.)	1.0
51 to 100 ft./min. (15.54 to 30.48 M/min.)	1.2
101 to160 ft./min. (30.78 to 48.77 M/min.)	1.4

- Compare the adjusted P_C to the average tensile strength of the selected chain by multiplying the adjusted chain pull by 8.

$$P_C \times 8 \leq \text{ATS (Average Tensile Strength)}$$

Example:

- Given: RPM = 10
  Torque = 7,000 in-lbs (0.791 M-kN)
  Maximum sprocket diameter = 10 inches (254 mm)
- Calculations:

$$H = \frac{T_{in} \times n}{63{,}025} \qquad H = \frac{7{,}000 \times 10}{63{,}025} \qquad H = 1.11HP$$

$$H_M = \frac{T_{mm} \times n}{9.544} \qquad H_M = \frac{0.791 \times 10}{9.544} \qquad H_M = 0.83kW$$

- Based on the horsepower, the estimated chain selection should be an 80 chain.
- Based on maximum sprocket diameter of 10 inches (254 mm) use table 28 on pages 28 through 30 or table 51 on pages 43 through 45 and select a 30 tooth sprocket which has a pitch diameter of 9.567 inches (243 mm).
- Calculate chain pull

$$P = \frac{T_{in} \times 2}{D} \qquad P = \frac{7{,}000 \times 2}{9.567} \qquad P = 1{,}463 \text{ lb}$$

$$P_M = \frac{T_{mm} \times 2{,}000}{D} \qquad P_M = \frac{0.791 \times 2{,}000}{243} \qquad P_M = 6.51 \text{ kN}$$

- Calculate chain speed

$$S = \frac{C \times N_S \times n}{12} \qquad S = \frac{1 \times 30 \times 10}{12} \qquad S = 25 \text{ feet per minute}$$

$$S_M = \frac{C_M \times N_S \times n}{1{,}000} \qquad S_M = \frac{25.1 \times 30 \times 10}{1{,}000} \qquad S_M = 7.53 \text{ meters per minute}$$

- Adjust chain pull for speed adjustment:

  P_c = Speed coefficient * P

  $P_c = 1 * 1{,}463$ $\qquad P_c = 1{,}463$

  $P_{Mc} = 1 \times 7.53$ M/min. $\qquad P_{Mc} = 7.53$ M/min.
- Compare against average tensile strength of the chain:

  $P_C \times 8 \leq$ ATS (Average Tensile Strength)

  $1{,}463 \times 8 \leq 14{,}500$ lb $\qquad 11{,}704 \leq 14{,}500$ lb

  $P_{Mc} = 7.53 \times 8 \leq 64.5$ kN $\qquad P_{Mc} = 60.24 \leq 64.5$ kN
- 80-1 chain with a 30 tooth sprocket is a selection.

SELECTION OF HIGH TEMPERATURES

Our chains are made from heat-treated carbon steel. When exposed to high temperatures, the mechanical properties of the heat-treated chain components are impaired.

1. The hardness and, therefore, the wear resistance of pins and bushings is reduced.
2. At temperatures above 390° F (199° C), the rollers and plates may lose some of their hardness and strength.

Standard roller chain can be used up to 500° F (260° C) with the adjustments shown in table 5.

TABLE 5. TEMPERATURE EFFECT ON CHAIN

Temperature	Percentage of Catalog Capacity Rating
Up to 340° F (171° C)	100 percent
390° F (199° C)	75 percent
500 ° F (260° C)	50 percent

ROLLER CHAIN DIMENSIONS AND HORSEPOWER TABLES – INCH

35 – 0.375 INCH PITCH

TABLE 6. 35 – 0.375 INCH PITCH HORSEPOWER

No. of Teeth	Revolutions Per Minute – Small Sprocket																										
	50	100	200	240	500	700	900	1200	1500	1800	2100	2500	3000	3500	4000	4500	5000	5500	6000	6500	7000	7500	8000	8500	9000	10000
11	0.11	0.22	0.42	0.50	1.02	1.41	1.80	2.37	2.93	3.49	4.05	3.86	2.94	2.33	1.91	1.60	1.37	1.18	1.04	0.92	0.82	0.74	0.67	0.62	0.57	0.48
12	0.12	0.24	0.46	0.55	1.11	1.54	1.96	2.58	3.20	3.81	4.42	4.40	3.35	2.66	2.17	1.82	1.56	1.35	1.18	1.05	0.94	0.85	0.77	0.70	0.64	0.55
13	0.13	0.26	0.50	0.60	1.21	1.67	2.12	2.80	3.47	4.13	4.79	4.96	3.77	3.00	2.45	2.05	1.75	1.52	1.33	1.18	1.06	0.95	0.87	0.79	0.73	0.62
14	0.14	0.28	0.54	0.64	1.30	1.80	2.29	3.01	3.73	4.45	5.15	5.55	4.22	3.35	2.74	2.30	1.96	1.70	1.49	1.32	1.18	1.07	0.97	0.88	0.81	0.10
15	0.15	0.30	0.58	0.69	1.39	1.92	2.45	3.23	4.00	4.76	5.52	6.15	4.68	3.71	3.04	2.55	2.17	1.88	1.65	1.47	1.31	1.18	1.07	0.98	0.90	0.00
16	0.16	0.32	0.62	0.73	1.49	2.05	2.61	3.44	4.26	5.08	5.89	6.77	5.15	4.09	3.35	2.81	2.40	2.08	1.82	1.62	1.45	1.30	1.18	1.08	0.44	0.00
17	0.17	0.34	0.65	0.78	1.58	2.18	2.77	3.66	4.53	5.40	6.26	7.40	5.64	4.48	3.67	3.07	2.62	2.27	2.00	1.77	1.58	1.43	1.30	1.02	0.00	
18	0.18	0.36	0.69	0.83	1.67	2.31	2.94	3.87	4.80	5.72	6.63	7.83	6.15	4.88	3.99	3.35	2.86	2.48	2.17	1.93	1.73	1.56	1.41	0.00		
19	0.19	0.38	0.73	0.87	1.76	2.44	3.10	4.09	5.06	6.03	7.00	8.27	6.67	5.29	4.33	3.63	3.10	2.69	2.36	2.09	1.87	1.69	0.05	0.00		
20	0.20	0.40	0.77	0.92	1.86	2.56	3.26	4.30	5.33	6.35	7.36	8.71	7.20	5.72	4.68	3.92	3.35	2.90	2.55	2.26	2.02	1.42	0.00			
21	0.21	0.42	0.81	0.96	1.95	2.69	3.43	4.52	5.60	6.67	7.73	9.14	7.75	6.15	5.03	4.22	3.60	3.12	2.74	2.43	2.17	0.00				
22	0.22	0.44	0.85	1.01	2.04	2.82	3.59	4.73	5.86	6.99	8.10	9.58	8.31	6.59	5.40	4.52	3.86	3.35	2.94	2.61	1.42	0.00				
23	0.23	0.46	0.89	1.06	2.14	2.95	3.75	4.95	6.13	7.30	8.47	10.01	8.88	7.05	5.77	4.83	4.13	3.58	3.14	2.79	0.00					
24	0.24	0.48	0.92	1.10	2.23	3.08	3.92	5.16	6.40	7.62	8.84	10.45	9.47	7.51	6.15	5.15	4.40	3.81	3.35	2.04	0.00					
25	0.25	0.50	0.96	1.15	2.32	3.21	4.08	5.38	6.66	7.94	9.20	10.88	10.07	7.99	6.54	5.48	4.68	4.05	3.56	0.12	0.00					
26	0.26	0.51	1.00	1.19	2.41	3.33	4.24	5.59	6.93	8.26	9.57	11.32	10.68	8.47	6.93	5.81	4.96	4.30	3.40	0.00						
28	0.29	0.55	1.08	1.28	2.60	3.59	4.57	6.02	7.46	8.89	10.31	12.19	11.93	9.47	7.75	6.49	5.55	4.81	0.00							
30	0.31	0.59	1.16	1.38	2.79	3.85	4.90	6.45	8.00	9.53	11.05	13.06	13.23	10.50	8.59	7.20	6.15	2.24	0.00							
32	0.33	0.63	1.23	1.47	2.97	4.10	5.22	6.88	8.53	10.16	11.78	13.93	14.58	11.57	9.47	7.93	5.76	0.00								
35	0.36	0.69	1.35	1.61	3.25	4.49	5.71	7.53	9.33	11.11	12.89	15.23	16.67	13.23	10.83	8.85	0.34	0.00								
40	0.41	0.79	1.54	1.84	3.71	5.13	6.53	8.61	10.66	12.70	14.73	17.41	20.37	16.17	11.04	0.34	0.00									
45	0.46	0.89	1.73	2.07	4.18	5.77	7.35	9.68	11.99	14.29	16.57	19.59	23.33	15.56	3.11	0.00										
	Type I Manual or Drip Lubrication				Type II Bath or Disc Lubrication						Type III Oil Stream Lubrication															

NOTE: The limiting RPM for each lubrication type is shown in the chart's shaded areas directly above the type I, II or III reference. For optimum results, it is suggested that the roller chain manufacturer be given the opportunity to evaluate the operating condition of chains in the shaded (galling range) speed area. The horsepower ratings of multiple-strand chains are greater than those for single strand chain. See table 1 on page 8 for multiple-strand factors.

41 – 0.500 INCH PITCH

TABLE 7. 41 – 0.500 INCH PITCH HORSEPOWER

No. of Teeth	Revolutions Per Minute – Small Sprocket																									
	10	25	50	100	180	200	300	400	500	700	900	1000	1200	1400	1600	1800	2100	2400	2700	3000	3500	4000	5000	6000	7000	8000
11	0.03	0.07	0.15	0.28	0.50	0.55	0.81	1.07	1.33	1.84	2.34	2.25	1.71	1.36	1.11	0.93	0.74	0.61	0.51	0.43	0.34	0.28	0.20	0.15	0.12	0.10
12	0.03	0.08	0.16	0.31	0.54	0.60	0.89	1.17	1.45	2.00	2.55	2.57	1.95	1.55	1.27	1.06	0.84	0.69	0.58	0.49	0.39	0.32	0.23	0.17	0.14	0.11
13	0.04	0.09	0.17	0.34	0.59	0.65	0.96	1.27	1.57	2.17	2.76	2.89	2.20	1.75	1.43	1.20	0.95	0.78	0.65	0.56	0.44	0.36	0.26	0.20	0.16	0.00
14	0.04	0.10	0.19	0.36	0.63	0.70	1.04	1.37	1.69	2.34	2.97	3.23	2.46	1.95	1.60	1.34	1.06	0.87	0.73	0.62	0.49	0.40	0.29	0.22	0.17	0.00
15	0.04	0.10	0.20	0.39	0.68	0.75	1.11	1.46	1.81	2.50	3.19	3.53	2.73	2.17	1.77	1.49	1.18	0.96	0.81	0.69	0.55	0.45	0.32	0.24	0.19	0.00
16	0.05	0.11	0.21	0.41	0.73	0.80	1.18	1.56	1.93	2.67	3.40	3.76	3.01	2.39	1.95	1.64	1.30	1.06	0.89	0.76	0.60	0.49	0.35	0.27	0.00	
17	0.05	0.12	0.23	0.44	0.77	0.85	1.26	1.66	2.05	2.84	3.61	4.00	3.29	2.61	2.14	1.79	1.42	1.16	0.98	0.83	0.66	0.54	0.39	0.29	0.00	
18	0.05	0.12	0.24	0.46	0.82	0.90	1.33	1.76	2.18	3.00	3.82	4.23	3.59	2.85	2.33	1.95	1.55	1.27	1.06	0.91	0.72	0.59	0.42	0.32	0.00	
19	0.05	0.13	0.25	0.49	0.86	0.95	1.41	1.85	2.30	3.17	4.04	4.47	3.89	3.09	2.53	2.12	1.68	1.38	1.15	0.98	0.78	0.64	0.46	0.09	0.00	
20	0.06	0.14	0.27	0.52	0.91	1.00	1.48	1.95	2.42	3.34	4.25	4.70	4.20	3.33	2.73	2.29	1.81	1.49	1.24	1.06	0.84	0.69	0.49	0.00		
21	0.06	0.14	0.28	0.54	0.95	1.05	1.55	2.05	2.54	3.51	4.46	4.94	4.52	3.59	2.94	2.46	1.95	1.60	1.34	1.14	0.91	0.74	0.53	0.00		
22	0.06	0.15	0.29	0.57	1.00	1.10	1.63	2.15	2.66	3.67	4.67	5.17	4.85	3.85	3.15	2.64	2.09	1.71	1.44	1.23	0.97	0.80	0.57	0.00		
23	0.07	0.16	0.30	0.59	1.04	1.15	1.70	2.24	2.78	3.84	4.89	5.41	5.18	4.11	3.37	2.82	2.24	1.83	1.54	1.31	1.04	0.85	0.61	0.00		
24	0.07	0.16	0.32	0.62	1.09	1.20	1.78	2.34	2.90	4.01	5.10	5.64	5.52	4.38	3.59	3.01	2.39	1.95	1.64	1.40	1.11	0.91	0.65	0.00		
25	0.07	0.17	0.33	0.64	1.13	1.25	1.85	2.44	3.02	4.17	5.31	5.88	5.87	4.66	3.81	3.20	2.54	2.08	1.74	1.49	1.18	0.96	0.00			
26	0.07	0.18	0.34	0.67	1.18	1.30	1.92	2.54	3.14	4.34	5.52	6.11	6.23	4.94	4.05	3.39	2.69	2.20	1.85	1.58	1.25	1.02	0.00			
28	0.08	0.19	0.37	0.72	1.27	1.40	2.07	2.73	3.38	4.67	5.95	6.58	6.96	5.52	4.52	3.79	3.01	2.46	2.06	1.76	1.40	1.14	0.00			
30	0.08	0.20	0.40	0.77	1.36	1.50	2.22	2.93	3.63	5.01	6.37	7.05	7.72	6.13	5.01	4.20	3.33	2.73	2.29	1.95	1.55	1.27	0.00			
32	0.09	0.22	0.42	0.82	1.45	1.60	2.37	3.12	3.87	5.34	6.80	7.52	8.50	6.75	5.52	4.63	3.67	3.01	2.52	2.15	1.71	1.40	0.00			
35	0.10	0.24	0.46	0.90	1.59	1.76	2.59	3.41	4.23	5.84	7.44	8.23	9.80	7.72	6.32	5.29	4.20	3.44	2.88	2.46	1.95	0.00				
40	0.11	0.27	0.53	1.03	1.81	2.01	2.96	3.90	4.83	6.68	8.50	9.40	11.20	9.43	7.72	6.47	5.13	4.20	3.52	3.01	0.00					
45	0.13	0.31	0.60	1.16	2.04	2.26	3.33	4.39	5.44	7.51	9.56	10.58	12.60	11.25	9.21	7.72	6.13	5.01	4.20	3.59	0.00					
	Type I Manual or Drip Lubrication				Type II Bath or Disc Lubrication										Type III Oil Stream Lubrication											

NOTE: The limiting RPM for each lubrication type is shown in the chart's shaded areas directly above the type I, II or III reference. For optimum results, it is suggested that the roller chain manufacturer be given the opportunity to evaluate the operating condition of chains in the shaded (galling range) speed area. The horsepower ratings of multiple-strand chains are greater than those for single strand chain. See table 1 on page 8 for multiple-strand factors.

40 – 0.500 INCH PITCH

TABLE 8. 40 – 0.500 INCH PITCH HORSEPOWER

No. of Teeth	Revolutions Per Minute – Small Sprocket																										
	10	25	50	100	180	200	300	400	500	700	900	1000	1200	1400	1600	1800	2100	2400	2700	3000	3500	4000	5000	6000	7000	8000	8500
11	0.06	0.14	0.27	0.52	0.91	1.00	1.48	1.95	2.42	3.34	4.25	4.70	5.60	6.49	5.57	4.66	3.70	3.03	2.54	2.17	1.72	1.41	1.01	0.77	0.61	0.50	0.45
12	0.06	0.15	0.29	0.56	0.99	1.09	1.61	2.13	2.64	3.64	4.64	5.13	6.11	7.09	6.34	5.31	4.22	3.45	2.89	2.47	1.96	1.60	1.15	0.87	0.69	0.57	0.00
13	0.07	0.16	0.31	0.61	1.07	1.19	1.75	2.31	2.86	3.95	5.02	5.56	6.62	7.68	7.15	5.99	4.76	3.89	3.26	2.79	2.21	1.81	1.29	0.98	0.78	0.00	
14	0.07	0.17	0.34	0.66	1.15	1.28	1.88	2.48	3.08	4.25	5.41	5.98	7.13	8.27	7.99	6.70	5.31	4.35	3.65	3.11	2.47	2.02	1.45	1.10	0.87	0.00	
15	0.08	0.19	0.36	0.70	1.24	1.37	2.02	2.66	3.30	4.55	5.80	6.41	7.64	8.86	8.86	7.43	5.89	4.82	4.04	3.45	2.74	2.24	1.60	1.22	0.97	0.00	
16	0.08	0.20	0.39	0.75	1.32	1.46	2.15	2.84	3.52	4.86	6.18	6.84	8.15	9.45	9.76	8.18	6.49	5.31	4.45	3.80	3.02	2.47	1.77	1.34	0.00		
17	0.09	0.21	0.41	0.80	1.40	1.55	2.2	3.02	3.74	5.16	6.57	7.27	8.66	10.04	10.69	8.96	7.11	5.82	4.88	4.17	3.31	2.71	1.94	1.47	0.00		
18	0.09	0.22	0.43	0.84	1.48	1.64	2.42	3.19	3.96	5.46	6.95	7.69	9.17	10.63	11.65	9.76	7.75	6.34	5.31	4.54	3.60	2.95	2.11	1.60	0.00		
19	0.10	0.24	0.46	0.89	1.57	1.73	2.56	3.37	4.18	5.77	7.34	8.12	9.68	11.22	12.64	10.59	8.40	6.88	5.76	4.92	3.91	3.20	2.29	0.09	0.00		
20	0.10	0.25	0.48	0.94	1.65	1.82	2.69	3.55	4.39	6.07	7.73	8.55	10.18	11.81	13.42	11.44	9.07	7.43	6.22	5.31	4.22	3.45	2.47	0.00			
21	0.11	0.26	0.51	0.98	1.73	1.91	2.83	3.72	4.61	6.37	8.11	8.98	10.69	12.40	14.10	12.30	9.76	7.99	6.70	5.72	4.54	3.71	2.66	0.00			
22	0.11	0.27	0.53	1.03	1.81	2.01	2.96	3.90	4.83	6.68	8.50	9.40	11.20	12.99	14.77	13.19	10.47	8.57	7.18	6.13	4.87	3.98	2.85	0.00			
23	0.12	0.28	0.55	1.08	1.90	2.10	3.10	4.08	5.05	6.98	8.89	9.83	11.71	13.58	15.44	14.10	11.19	9.16	7.68	6.55	5.20	4.26	3.05	0.00			
24	0.12	0.30	0.58	1.12	1.98	2.19	3.23	4.26	5.27	7.28	9.27	10.26	12.22	14.17	16.11	15.03	11.93	9.76	8.18	6.99	5.54	4.54	0.87	0.00			
25	0.13	0.31	0.60	1.17	2.06	2.28	3.36	4.43	5.49	7.59	9.66	10.69	12.73	14.76	16.78	15.98	12.68	10.38	8.70	7.43	5.89	4.82	0.00				
26	0.13	0.32	0.63	1.22	2.14	2.37	3.50	4.61	5.71	7.89	10.04	11.11	13.24	15.35	17.45	16.95	13.45	11.01	9.23	7.88	6.25	5.12	0.00				
28	0.14	0.35	0.67	1.31	2.31	2.55	3.77	4.97	6.15	8.50	10.82	11.97	14.26	16.53	18.79	18.94	15.03	12.30	10.31	8.80	6.99	5.72	0.00				
30	0.15	0.37	0.72	1.41	2.47	2.74	4.04	5.32	6.59	9.11	11.59	12.82	15.28	17.71	20.14	21.01	16.67	13.65	11.44	9.76	7.75	6.34	0.00				
32	0.16	0.40	0.77	1.50	2.64	2.92	4.31	5.68	7.03	9.71	12.36	13.68	16.30	18.89	21.48	23.14	18.37	15.03	12.60	10.76	8.54	1.41					
35	0.18	0.43	0.84	1.64	2.88	3.19	4.71	6.21	7.69	10.62	13.52	14.96	17.82	20.67	23.49	26.30	21.01	17.20	14.41	12.30	9.76	0.00					
40	0.21	0.50	0.96	1.87	3.30	3.65	5.38	7.09	8.79	12.14	15.45	17.10	20.37	23.62	26.85	30.06	25.67	21.01	17.61	15.03	0.00						
45	0.23	0.56	1.08	2.11	3.71	4.10	6.06	7.98	9.89	13.66	17.39	19.24	22.92	26.57	30.20	33.82	30.63	25.07	21.01	5.53	0.00						
	Type I Manual or Drip Lubrication						Type II Bath or Disc Lubrication								Type III Oil Stream Lubrication												

NOTE: The limiting RPM for each lubrication type is shown in the chart's shaded areas directly above the type I, II or III reference. For optimum results, it is suggested that the roller chain manufacturer be given the opportunity to evaluate the operating condition of chains in the shaded (galling range) speed area. The horsepower ratings of multiple-strand chains are greater than those for single strand chain. See table 1 on page 8 for multiple-strand factors.

50 – 0.625 INCH PITCH

TABLE 9. 50 – 0.625 INCH PITCH HORSEPOWER

No. of Teeth	Revolutions Per Minute – Small Sprocket																									
	10	25	50	100	140	200	300	500	700	900	1200	1500	1800	2100	2500	3000	3500	4000	4500	5000	5500	6000	6500	7000	7500
11	0.11	0.27	0.52	1.00	1.39	1.95	2.88	4.70	6.50	8.27	10.24	7.33	5.58	4.42	3.41	2.59	2.06	1.68	1.41	1.20	1.04	0.92	0.81	0.73	0.00
12	0.12	0.29	0.56	1.09	1.51	2.13	3.14	5.13	7.09	9.02	11.67	8.35	6.35	5.04	3.88	2.95	2.34	1.92	1.61	1.37	1.19	1.04	0.93	0.00		
13	0.13	0.31	0.61	1.19	1.64	2.31	3.40	5.56	7.68	9.77	12.88	9.42	7.16	5.69	4.38	3.33	2.64	2.16	1.81	1.55	1.34	1.18	0.00			
14	0.14	0.34	0.66	1.28	1.76	2.48	3.67	5.99	8.27	10.53	13.87	10.52	8.01	6.35	4.89	3.72	2.95	2.42	2.03	1.73	1.50	0.28	0.00			
15	0.15	0.36	0.70	1.37	1.89	2.66	3.93	6.41	8.86	11.28	14.86	11.67	8.88	7.05	5.42	4.13	3.27	2.68	2.25	1.92	1.66	0.00	1.60			
16	0.16	0.39	0.75	1.46	2.02	2.84	4.19	6.84	9.45	12.03	15.85	12.86	9.78	7.76	5.98	4.55	3.61	2.95	2.47	2.11	0.00					
17	0.17	0.41	0.80	1.55	2.14	3.02	4.45	7.27	10.04	12.78	16.85	14.08	10.71	8.50	6.55	4.98	3.95	3.23	2.71	2.31	0.00					
18	0.18	0.43	0.84	1.64	2.27	3.19	4.71	7.70	10.63	13.53	17.84	15.34	11.67	9.26	7.13	5.42	4.30	3.52	2.95	0.05						
19	0.19	0.46	0.89	1.73	2.39	3.37	4.98	8.12	11.22	14.28	18.83	16.64	12.66	10.05	7.73	5.88	4.67	3.82	3.20	0.00						
20	0.20	0.48	0.94	1.82	2.52	3.55	5.24	8.55	11.81	15.04	19.82	17.97	13.67	10.85	8.35	6.35	5.04	4.13	3.46	0.00						
21	0.21	0.51	0.98	1.92	2.65	3.73	5.50	8.98	12.40	15.79	20.81	19.34	14.71	11.67	8.99	6.84	5.42	4.44	0.00							
22	0.22	0.53	1.03	2.01	2.77	3.90	5.76	9.41	12.99	16.54	21.80	20.73	15.77	12.52	9.64	7.33	5.82	4.76	0.00							
23	0.23	0.55	1.08	2.10	2.90	4.08	6.02	9.83	13.58	17.29	22.79	22.16	16.86	13.38	10.30	7.84	6.22	5.09	0.00							
24	0.24	0.58	1.13	2.19	3.02	4.26	6.28	10.26	14.18	18.04	23.78	23.62	17.97	14.26	10.98	8.35	6.63	1.36	0.00							
25	0.25	0.60	1.17	2.28	3.15	4.44	6.55	10.69	14.77	18.79	24.77	25.11	19.11	15.16	11.67	8.88	7.05									
26	0.26	0.63	1.22	2.37	3.28	4.61	6.81	11.12	15.36	19.55	25.76	26.64	20.26	16.08	12.38	9.42	7.47	0.00								
28	0.28	0.67	1.31	2.55	3.53	4.97	7.33	11.97	16.54	21.05	27.75	29.77	22.65	17.97	13.84	10.52	4.74	0.00								
30	0.30	0.72	1.41	2.74	3.78	5.32	7.86	12.83	17.72	22.55	29.73	33.01	25.11	19.93	15.34	11.67	0.00									
32	0.32	0.77	1.50	2.92	4.03	5.68	8.38	13.68	18.90	24.06	31.71	36.37	27.67	21.96	16.90	12.86	0.00									
35	0.35	0.84	1.64	3.19	4.41	6.21	9.16	14.97	20.67	26.31	34.68	41.60	31.65	25.11	19.34	0.94	0.00									
40	0.40	0.96	1.88	3.65	5.04	7.10	10.47	17.10	23.63	30.07	39.64	49.11	38.67	30.68	23.62	0.00										
45	0.45	1.08	2.11	4.10	5.67	7.98	11.78	19.24	26.58	33.83	44.59	55.24	46.14	36.61	8.64											
	Type I Manual or Drip Lubrication						Type II Bath or Disc Lubrication					Type III Oil Stream Lubrication														

NOTE: The limiting RPM for each lubrication type is shown in the chart's shaded areas directly above the type I, II or III reference. For optimum results, it is suggested that the roller chain manufacturer be given the opportunity to evaluate the operating condition of chains in the shaded (galling range) speed area. The horsepower ratings of multiple-strand chains are greater than those for single strand chain. See table 1 on page 8 for multiple-strand factors.

60 – 0.750 INCH PITCH

TABLE 10. 60 – 0.750 INCH PITCH HORSEPOWER

No. of Teeth	Revolutions Per Minute – Small Sprocket																								
	10	25	50	100	120	200	300	400	500	600	800	1000	1200	1400	1600	1800	2000	2500	3000	3500	4000	4500	5000	5500	6000
11	0.19	0.46	0.89	1.72	2.05	3.35	4.95	6.52	8.08	9.63	12.69	15.58	11.85	9.41	7.70	6.45	5.51	3.94	3.00	2.38	1.95	1.63	1.39	1.21	0.00
12	0.21	0.50	0.97	1.88	2.24	3.66	5.40	7.12	8.82	10.51	13.85	17.15	13.51	10.72	8.77	7.35	6.28	4.49	3.42	2.71	2.22	1.86	1.59	1.38	0.00
13	0.22	0.54	1.05	2.04	2.43	3.96	5.85	7.71	9.55	11.38	15.00	18.58	15.23	12.08	9.89	8.29	7.08	5.06	3.85	3.06	2.50	2.10	1.79	0.00	
14	0.24	0.58	1.13	2.19	2.61	4.27	6.30	8.30	10.29	12.26	16.15	20.01	17.02	13.51	11.05	9.26	7.91	5.66	4.31	3.42	2.80	2.34	0.41	0.00	
15	0.26	0.62	1.21	2.35	2.80	4.57	6.75	8.90	11.02	13.13	17.31	21.44	18.87	14.98	12.26	10.27	8.77	6.28	4.77	3.79	3.10	2.60	0.00		
16	0.27	0.66	1.29	2.51	2.99	4.88	7.20	9.49	11.76	14.01	18.46	22.87	20.79	16.50	13.51	11.32	9.66	6.91	5.26	4.17	3.42	1.78	0.00		
17	0.29	0.70	1.37	2.66	3.17	5.18	7.65	10.08	12.49	14.88	19.62	24.30	22.77	18.07	14.79	12.40	10.58	7.57	5.76	4.57	3.74	0.00			
18	0.31	0.75	1.45	2.82	3.36	5.49	8.10	10.68	13.23	15.76	20.77	25.73	24.81	19.69	16.11	13.51	11.53	8.25	6.28	4.98	4.08	0.00			
19	0.33	0.79	1.53	2.98	3.55	5.79	8.55	11.27	13.96	16.63	21.92	27.16	26.91	21.35	17.48	14.65	12.50	8.95	6.81	5.40	0.20	0.00			
20	0.34	0.83	1.61	3.13	3.73	6.10	9.00	11.86	14.70	17.51	23.08	28.59	29.06	23.06	18.87	15.82	13.51	9.66	7.35	5.83	0.00				
21	0.36	0.87	1.69	3.29	3.92	6.40	9.45	12.46	15.43	18.38	24.23	30.02	31.26	24.81	20.31	17.02	14.53	10.40	7.91	6.28	0.00				
22	0.38	0.91	1.77	3.45	4.11	6.71	9.90	13.05	16.17	19.26	25.39	31.45	33.52	26.60	21.77	18.25	15.58	11.15	8.48	0.00					
23	0.40	0.95	1.85	3.61	4.29	7.01	10.35	13.64	16.90	20.13	26.54	32.88	35.84	28.44	23.28	19.51	16.66	11.92	9.07	0.00					
24	0.41	0.99	1.93	3.76	4.48	7.32	10.80	14.24	17.64	21.01	27.69	34.31	38.20	30.31	24.81	20.79	17.75	12.70	9.66	0.00					
25	0.43	1.04	2.01	3.92	4.67	7.62	11.25	14.83	18.37	21.89	28.85	35.74	40.61	32.23	26.38	22.11	18.87	13.51	10.27	0.00					
26	0.45	1.08	2.09	4.08	4.85	7.93	11.70	15.42	19.11	22.76	30.00	37.17	43.07	34.18	27.98	23.44	20.02	14.32	10.90	0.00					
28	0.48	1.16	2.26	4.39	5.23	8.54	12.60	16.61	20.58	24.51	32.31	40.03	47.68	38.20	31.26	26.20	22.37	16.01	0.00						
30	0.52	1.24	2.42	4.70	5.60	9.15	13.50	17.79	22.05	26.26	34.62	42.89	51.09	42.36	34.67	29.06	24.81	17.75	0.00						
32	0.55	1.33	2.58	5.02	5.98	9.76	14.40	18.98	23.52	28.01	36.92	45.75	54.50	46.67	38.20	32.01	27.33	19.56	0.00						
35	0.60	1.45	2.82	5.49	6.54	10.67	15.75	20.76	25.72	30.64	40.39	50.03	59.60	53.38	43.69	36.62	31.26	1.35	0.00						
40	0.69	1.66	3.22	6.27	7.47	12.20	18.00	23.73	29.39	35.02	46.16	57.18	68.12	65.22	53.38	44.74	38.20	0.00							
45	0.77	1.86	3.63	7.05	8.40	13.72	20.25	26.69	33.07	39.39	51.92	64.33	76.63	77.83	63.70	53.38	12.45	0.00							
	Type I Manual or Drip Lubrication				Type II Bath or Disc Lubrication							Type III Oil Stream Lubrication													

NOTE: The limiting RPM for each lubrication type is shown in the chart's shaded areas directly above the type I, II or III reference. For optimum results, it is suggested that the roller chain manufacturer be given the opportunity to evaluate the operating condition of chains in the shaded (galling range) speed area. The horsepower ratings of multiple-strand chains are greater than those for single strand chain. See table 1 on page 8 for multiple-strand factors.

80 – 1.000 INCH PITCH

TABLE 11. 80 – 1.000 INCH PITCH HORSEPOWER

No. of Teeth	Revolutions Per Minute – Small Sprocket																														
	10	25	50	75	88	100	150	200	300	400	500	600	700	800	900	1000	1100	1200	1400	1600	1800	2000	2200	2400	2700	3000	3300	3600	4000	4500
11	0.44	1.06	2.07	3.05	3.56	4.03	5.94	7.83	11.56	15.23	18.87	22.48	26.07	27.41	22.97	19.61	17.00	14.92	11.84	9.69	8.12	6.93	6.01	5.27	4.42	3.77	3.27	2.87	2.45	0.00
12	0.48	1.16	2.26	3.33	3.88	4.39	6.48	8.54	12.61	16.62	20.59	24.53	28.44	31.23	26.17	22.35	19.37	17.00	13.49	11.04	9.25	7.90	6.85	6.01	5.04	4.30	3.73	3.27	2.79	0.00
13	0.52	1.26	2.45	3.61	4.21	4.76	7.02	9.26	13.66	18.00	22.31	26.57	30.81	35.02	29.51	25.20	21.84	19.17	15.21	12.45	10.43	8.91	7.72	6.78	5.68	4.85	4.20	3.69	0.00	
14	0.56	1.35	2.63	3.89	4.53	5.12	7.56	9.97	14.71	19.39	24.02	28.62	33.18	37.72	32.98	28.16	24.41	21.42	17.00	13.91	11.66	9.96	8.63	7.57	6.35	5.42	4.70	4.12		
15	0.60	1.45	2.82	4.16	4.86	5.49	8.10	10.68	15.76	20.77	25.74	30.66	35.55	40.41	36.58	31.23	27.07	23.76	18.85	15.43	12.93	11.04	9.57	8.40	7.04	6.01	5.21	4.57		
16	0.64	1.55	3.01	4.44	5.18	5.86	8.64	11.39	16.81	22.16	27.45	32.70	37.92	43.11	40.30	34.41	29.82	26.17	20.77	17.00	14.25	12.16	10.54	9.25	7.76	6.62	5.74	0.00		
17	0.68	1.64	3.20	4.72	5.50	6.22	9.18	12.10	17.86	23.54	29.17	34.75	40.29	45.80	44.13	37.68	32.66	28.66	22.75	18.62	15.60	13.32	11.55	10.13	8.49	7.25	0.00			
18	0.72	1.74	3.39	5.00	5.83	6.59	9.72	12.81	18.91	24.93	30.88	36.79	42.66	48.49	48.08	41.05	35.59	31.23	24.78	20.29	17.00	14.51	12.58	11.04	9.25	7.90	0.00			
19	0.76	1.84	3.57	5.28	6.15	6.95	10.26	13.53	19.96	26.31	32.60	38.84	45.03	51.19	52.15	44.52	38.59	33.87	26.88	22.00	18.44	15.74	13.64	11.97	10.04	0.36	0.00			
20	0.80	1.93	3.76	5.55	6.47	7.32	10.80	14.24	21.01	27.70	34.32	40.88	47.40	53.88	56.32	48.08	41.68	36.58	29.03	23.76	19.91	17.00	14.74	12.93	10.84	0.00				
21	0.84	2.03	3.95	5.83	6.80	7.69	11.34	14.95	22.07	29.08	36.03	42.92	49.77	56.58	60.59	51.73	44.84	39.36	31.23	25.56	21.42	18.29	15.85	13.91	11.66	0.00				
22	0.88	2.13	4.14	6.11	7.12	8.05	11.88	15.66	23.12	30.47	37.75	44.97	52.14	59.27	64.97	55.47	48.08	42.20	33.49	27.41	22.97	19.61	17.00	14.92	0.00					
23	0.92	2.22	4.33	6.39	7.45	8.42	12.42	16.37	24.17	31.85	39.46	47.01	54.51	61.97	69.38	59.30	51.40	45.11	35.80	29.30	24.55	20.97	18.17	15.95	0.00					
24	0.96	2.32	4.52	6.66	7.77	8.78	12.96	17.09	25.22	33.24	41.18	49.06	56.88	64.66	72.40	63.21	54.79	48.08	38.16	31.23	26.17	22.35	19.37	17.00	0.00					
25	1.00	2.42	4.70	6.94	8.09	9.15	13.50	17.80	26.27	34.62	42.89	51.10	59.25	67.35	75.42	67.20	58.25	51.12	40.57	33.20	27.83	23.76	20.59	8.16	0.00					
26	1.04	2.51	4.89	7.22	8.42	9.52	14.04	18.51	27.32	36.01	44.61	53.14	61.62	70.05	78.43	71.27	61.78	54.22	43.02	35.22	29.51	25.20	21.84	0.00						
28	1.12	2.71	5.27	7.77	9.06	10.25	15.12	19.93	29.42	38.78	48.04	57.23	66.36	75.44	84.47	79.65	69.04	60.59	48.08	39.36	32.98	28.16	9.22	0.00						
30	1.20	2.90	5.64	8.33	9.71	10.98	16.20	21.36	31.52	41.55	51.47	61.32	71.10	80.82	90.50	88.33	76.57	67.20	53.33	43.65	36.58	31.23	0.00							
32	1.28	3.09	6.02	8.89	10.36	11.71	17.28	22.78	33.62	44.32	54.91	65.41	75.84	86.21	96.53	97.31	84.35	74.03	58.75	48.08	40.30	5.65	0.00							
35	1.40	3.38	6.58	9.72	11.33	12.81	18.90	24.92	36.78	48.47	60.05	71.54	82.95	94.29	105.58	111.31	96.49	84.68	67.20	55.00	28.15	0.00								
40	1.61	3.87	7.53	11.11	12.95	14.64	21.61	28.48	42.03	55.40	68.63	81.76	94.80	107.77	120.67	133.51	117.88	103.46	82.10	40.16	0.00									
45	1.81	4.35	8.47	12.49	14.57	16.47	24.31	32.04	47.28	62.32	77.21	91.98	106.65	121.24	135.75	150.20	140.66	123.45	72.28	0.00										
	Type I Manual or Drip Lubrication				Type II Bath or Disc Lubrication									Type III Oil Stream Lubrication																

NOTE: The limiting RPM for each lubrication type is shown in the chart's shaded areas directly above the type I, II or III reference. For optimum results, it is suggested that the roller chain manufacturer be given the opportunity to evaluate the operating condition of chains in the shaded (galling range) speed area. The horsepower ratings of multiple-strand chains are greater than those for single strand chain. See table 1 on page 8 for multiple-strand factors.

100 – 1.250 INCH PITCH

TABLE 12. 100 – 1.250 INCH PITCH HORSEPOWER

No. of Teeth	Revolutions Per Minute – Small Sprocket																														
	5	10	25	50	71	75	100	150	200	300	400	500	600	700	800	900	1000	1100	1200	1400	1600	1800	2000	2200	2400	2700	3000	3300	3600	4500
11	0.43	0.85	2.04	3.96	5.55	5.85	7.71	11.38	15.00	22.14	29.18	36.15	43.06	40.03	32.77	27.46	23.45	20.32	17.84	14.15	11.58	9.71	8.29	7.19	6.31	5.28	4.51	3.91	0.00	0.00
12	0.47	0.92	2.22	4.32	6.05	6.38	8.41	12.41	16.36	24.15	31.83	39.44	46.98	45.61	37.33	31.29	26.71	23.16	20.32	16.13	13.20	11.06	9.45	8.19	7.19	6.02	5.14	4.46	0.00	0.00
13	0.51	1.00	2.41	4.68	6.56	6.91	9.11	13.45	17.73	26.16	34.48	42.72	50.89	51.43	42.10	35.28	30.12	26.11	22.92	18.18	14.88	12.47	10.65	9.23	8.10	6.79	5.80	0.00		
14	0.55	1.08	2.59	5.04	7.06	7.45	9.81	14.48	19.09	28.18	37.14	46.01	54.81	57.48	47.05	39.43	33.66	29.18	25.61	20.32	16.63	13.94	11.90	10.32	9.05	7.59	1.13	0.00		
15	0.59	1.15	2.78	5.41	7.57	7.98	10.51	15.52	20.45	30.19	39.79	49.30	58.72	63.75	52.18	43.73	37.33	32.36	28.40	22.54	18.45	15.46	13.20	11.44	10.04	8.42	0.00			
16	0.63	1.23	2.96	5.77	8.07	8.51	11.22	16.55	21.82	32.20	42.44	52.58	62.64	70.23	57.48	48.17	41.13	35.65	31.29	24.83	20.32	17.03	14.54	12.60	11.06	4.93	0.00			
17	0.67	1.31	3.15	6.13	8.58	9.04	11.92	17.59	23.18	34.21	45.10	55.87	66.55	76.91	62.95	52.76	45.05	39.04	34.27	27.19	22.26	18.65	15.93	13.80	12.12	0.00				
18	0.71	1.38	3.33	6.49	9.08	9.57	12.62	18.62	24.55	36.23	47.75	59.15	70.47	81.71	68.59	57.48	49.08	42.54	37.33	29.63	24.25	20.32	17.35	15.04	13.20	0.00				
19	0.75	1.46	3.52	6.85	9.59	10.10	13.32	19.66	25.91	38.24	50.40	62.44	74.38	86.25	74.38	62.34	53.22	46.13	40.49	32.13	26.30	22.04	18.82	16.31	0.56	0.00				
20	0.79	1.54	3.70	7.21	10.09	10.64	14.02	20.69	27.27	40.25	53.05	65.73	78.30	90.79	80.33	67.32	57.48	49.82	43.73	34.70	28.40	23.80	20.32	17.62	0.00					
21	0.83	1.61	3.89	7.57	10.60	11.17	14.72	21.73	28.64	42.26	55.71	69.01	82.21	95.33	86.43	72.43	61.85	53.61	47.05	37.33	30.56	25.61	21.87	8.17	0.00					
22	0.87	1.69	4.08	7.93	11.10	11.70	15.42	22.76	30.00	44.28	58.36	72.30	86.13	99.87	92.68	77.67	66.31	57.48	50.45	40.03	32.77	27.46	23.45	0.00						
23	0.91	1.77	4.26	8.29	11.60	12.23	16.12	23.79	31.36	46.29	61.01	75.59	90.04	104.41	99.07	83.02	70.89	61.44	53.93	42.79	35.03	29.35	25.06	0.00						
24	0.95	1.84	4.45	8.65	12.11	12.76	16.82	24.83	32.73	48.30	63.66	78.87	93.96	108.95	105.60	88.50	75.56	65.49	57.48	45.61	37.33	31.29	5.43	0.00						
25	0.99	1.92	4.63	9.01	12.61	13.30	17.52	25.86	34.09	50.31	66.32	82.16	97.87	113.48	112.27	94.09	80.33	69.63	61.11	48.49	39.69	33.26	0.00							
26	1.03	2.00	4.82	9.37	13.12	13.83	18.23	26.90	35.45	52.33	68.97	85.45	101.79	118.02	119.07	99.79	85.20	73.85	64.81	51.43	42.10	35.28	0.00							
28	1.11	2.15	5.19	10.09	14.13	14.89	19.63	28.97	38.18	56.35	74.27	92.02	109.62	127.10	133.07	111.52	95.22	82.53	72.43	57.48	47.05	0.00								
30	1.19	2.31	5.56	10.81	15.14	15.95	21.03	31.04	40.91	60.38	79.58	98.59	117.45	136.18	147.58	123.68	105.60	91.53	80.33	63.75	49.40	0.00								
32	1.26	2.46	5.93	11.53	16.15	17.02	22.43	33.11	43.64	64.40	84.88	105.16	125.28	145.26	162.58	136.25	116.33	100.84	88.50	70.23	8.82	0.00								
35	1.38	2.69	6.48	12.61	17.66	18.61	24.53	36.21	47.73	70.44	92.84	115.02	137.02	158.88	180.61	155.85	133.07	115.34	101.23	69.02	0.00									
40	1.58	3.07	7.41	14.41	20.18	21.27	28.04	41.38	54.54	80.50	106.11	131.45	156.60	181.58	206.41	190.42	162.58	140.92	122.68	0.00										
45	1.78	3.46	8.34	16.22	22.71	23.93	31.54	46.55	61.36	90.56	119.37	147.89	176.17	204.27	232.21	227.21	194.00	168.15	34.58	0.00										
	Type I Manual or Drip Lubrication					Type II Bath or Disc Lubrication							Type III Oil Stream Lubrication																		

NOTE: The limiting RPM for each lubrication type is shown in the chart's shaded areas directly above the type I, II or III reference. For optimum results, it is suggested that the roller chain manufacturer be given the opportunity to evaluate the operating condition of chains in the shaded (galling range) speed area. The horsepower ratings of multiple-strand chains are greater than those for single strand chain. See table 1 on page 8 for multiple-strand factors.

120 – 1.500 INCH PITCH

TABLE 13. 120 – 1.500 INCH PITCH HORSEPOWER

No. of Teeth	Revolutions Per Minute – Small Sprocket																											
	5	10	25	50	60	75	100	150	200	300	400	500	600	700	800	900	1000	1100	1200	1400	1600	1800	2000	2200	2400	2700	3000
11	0.73	1.43	3.44	6.69	7.97	9.88	13.02	19.22	25.33	37.38	49.27	61.04	58.37	46.32	37.91	31.77	27.13	23.51	20.64	16.38	13.40	11.23	9.59	8.31	7.30	6.11	0.00
12	0.80	1.56	3.75	7.30	8.70	10.78	14.20	20.96	27.63	40.78	53.75	66.59	66.51	52.78	43.20	36.20	30.91	26.79	23.51	18.66	15.27	12.80	10.93	9.47	8.31	6.97	0.00
13	0.87	1.69	4.07	7.91	9.42	11.67	15.39	22.71	29.93	44.18	58.23	72.14	74.99	59.51	48.71	40.82	34.85	30.21	26.51	21.04	17.22	14.43	12.32	10.68	9.37	0.00	
14	0.93	1.82	4.38	8.52	10.15	12.57	16.57	24.46	32.24	47.58	62.71	77.69	83.81	66.51	54.44	45.62	38.95	33.76	29.63	23.51	19.25	16.13	13.77	11.94	10.48	0.00	
15	1.00	1.95	4.69	9.13	10.87	13.47	17.76	26.20	34.54	50.98	67.19	83.24	92.95	73.76	60.37	50.59	43.20	37.44	32.86	26.08	21.34	17.89	15.27	13.24	0.00		
16	1.07	2.08	5.00	9.74	11.60	14.37	18.94	27.95	36.84	54.37	71.67	88.79	102.39	81.26	66.51	55.74	47.59	41.25	36.20	28.73	23.51	19.71	16.83	14.58	0.00		
17	1.13	2.21	5.32	10.34	12.32	15.27	20.12	29.70	39.14	57.77	76.15	94.34	112.14	88.99	72.84	61.04	52.12	45.18	39.65	31.46	25.75	21.58	18.43	0.00			
18	1.20	2.34	5.63	10.95	13.05	16.16	21.31	31.45	41.45	61.17	80.63	99.89	119.00	96.96	79.36	66.51	56.78	49.22	43.20	34.28	28.06	23.51	20.08	0.00			
19	1.27	2.47	5.94	11.56	13.77	17.06	22.49	33.19	43.75	64.57	85.11	105.44	125.61	105.15	86.06	72.13	61.58	53.38	46.85	37.18	30.43	25.50	0.80	0.00			
20	1.33	2.60	6.26	12.17	14.50	17.96	23.67	34.94	46.05	67.97	89.59	110.99	132.22	113.56	92.95	77.89	66.51	57.65	50.59	40.15	32.86	27.54	0.00				
21	1.40	2.73	6.57	12.78	15.22	18.86	24.86	36.69	48.36	71.37	94.07	116.54	138.83	122.18	100.00	83.81	71.56	62.02	54.44	43.20	35.36	27.46	0.00				
22	1.47	2.86	6.88	13.39	15.95	19.76	26.04	38.43	50.66	74.76	98.55	122.09	145.44	131.01	107.23	89.87	76.73	66.51	58.37	46.32	37.91	0.00					
23	1.53	2.99	7.19	14.00	16.67	20.65	27.22	40.18	52.96	78.16	103.02	127.64	152.05	140.04	114.62	96.06	82.02	71.09	62.39	49.51	40.53	0.00					
24	1.60	3.11	7.51	14.60	17.40	21.55	28.41	41.93	55.26	81.56	107.50	133.19	158.66	149.28	122.18	102.39	87.43	75.78	66.51	52.78	43.20	0.00					
25	1.67	3.24	7.82	15.21	18.12	22.45	29.59	43.67	57.57	84.96	111.98	138.74	165.27	158.70	129.90	108.86	92.95	80.56	70.71	56.11	18.37	0.00					
26	1.73	3.37	8.13	15.82	18.85	23.35	30.78	45.42	59.87	88.36	116.46	144.29	171.88	168.32	137.77	115.46	98.58	85.45	74.99	59.51	0.00						
28	1.87	3.63	8.76	17.04	20.30	25.15	33.14	48.92	64.47	95.15	125.42	155.38	185.11	188.11	153.97	129.03	110.17	95.49	83.81	66.51	0.00						
30	2.00	3.89	9.38	18.25	21.75	26.94	35.51	52.41	69.08	101.95	134.38	166.48	198.33	208.62	170.75	143.10	122.18	105.90	92.95	13.70	0.00						
32	2.14	4.15	10.01	19.47	23.20	28.74	37.88	55.90	73.68	108.75	143.34	177.58	211.55	229.83	188.11	157.65	134.60	116.67	102.39	0.00							
35	2.34	4.54	10.95	21.30	25.37	31.43	41.43	61.14	80.59	118.94	156.78	194.23	231.38	262.89	215.17	180.33	153.97	133.46	63.34	0.00							
40	2.67	5.19	12.51	24.34	28.99	35.92	47.35	69.88	92.11	135.94	179.17	221.98	264.44	306.61	262.89	220.32	176.66	42.93	0.00								
45	3.00	5.84	14.08	27.38	32.62	40.41	53.27	78.61	103.62	152.93	201.57	249.72	297.49	344.94	313.69	213.33	49.79	0.00									
	Type I Manual or Drip Lubrication							Type II Bath or Disc Lubrication					Type III Oil Stream Lubrication														

NOTE: The limiting RPM for each lubrication type is shown in the chart's shaded areas directly above the type I, II or III reference. For optimum results, it is suggested that the roller chain manufacturer be given the opportunity to evaluate the operating condition of chains in the shaded (galling range) speed area. The horsepower ratings of multiple-strand chains are greater than those for single strand chain. See table 1 on page 8 for multiple-strand factors.

140 – 1.750 INCH PITCH

TABLE 14. 140 – 1.750 INCH PITCH HORSEPOWER

No. of Teeth	Revolutions Per Minute – Small Sprocket																										
	5	10	25	50	53	75	100	150	200	300	400	500	600	700	800	900	1000	1100	1200	1400	1600	1800	2000	2200	2400	2700
11	1.14	2.21	5.32	10.36	10.95	15.28	20.15	29.73	39.19	57.84	76.24	86.80	66.03	52.40	42.89	35.94	30.69	26.60	23.35	18.53	15.16	12.71	10.85	9.40	8.25	0.00
12	1.24	2.41	5.81	11.30	11.95	16.67	21.98	32.44	42.75	63.10	83.17	98.90	75.24	59.70	48.87	40.95	34.97	30.31	26.60	21.11	17.28	14.48	12.36	10.72	0.72	0.00
13	1.34	2.61	6.29	12.24	12.94	18.06	23.81	35.14	46.32	68.36	90.10	111.52	84.83	67.32	55.10	46.18	39.43	34.17	29.99	23.80	19.48	16.33	13.94	12.08	0.00	
14	1.45	2.81	6.78	13.18	13.94	19.45	25.64	37.84	49.88	73.61	97.03	120.21	94.81	75.24	61.58	51.61	44.06	38.19	33.52	26.60	21.77	18.25	15.58	0.00		
15	1.55	3.01	7.26	14.12	14.93	20.84	27.47	40.54	53.44	78.87	103.96	128.79	105.15	83.44	68.29	57.23	48.87	42.36	37.17	29.50	24.15	20.24	17.28	0.00		
16	1.65	3.21	7.74	15.06	15.93	22.23	29.30	43.25	57.00	84.13	110.89	137.38	115.83	91.92	75.24	63.05	53.83	46.66	40.95	32.50	26.60	22.29	0.00			
17	1.75	3.41	8.23	16.00	16.93	23.62	31.13	45.95	60.57	89.39	117.82	145.97	126.86	100.67	82.40	69.05	58.96	51.11	44.85	35.59	29.13	24.41	0.00			
18	1.86	3.61	8.71	16.95	17.92	25.01	32.97	48.65	64.13	94.65	124.75	154.55	138.22	109.68	89.77	75.24	64.24	55.68	48.87	38.78	31.74	0.00				
19	1.96	3.82	9.20	17.89	18.92	26.40	34.80	51.36	67.69	99.90	131.68	163.14	149.89	118.95	97.36	81.59	69.66	60.38	53.00	42.06	34.42	0.00				
20	2.06	4.02	9.68	18.83	19.91	27.79	36.63	54.06	71.25	105.16	138.61	171.73	161.88	128.46	105.15	88.12	75.24	65.21	57.23	45.42	35.82	0.00				
21	2.17	4.22	10.16	19.77	20.91	29.18	38.46	56.76	74.82	110.42	145.54	180.31	174.17	138.22	113.13	94.81	80.95	70.16	61.58	48.87	0.00					
22	2.27	4.42	10.65	20.71	21.90	30.57	40.29	59.47	78.38	115.68	152.47	188.90	186.76	148.21	121.30	101.66	86.80	75.24	66.03	52.40	0.00					
23	2.37	4.62	11.13	21.65	22.90	31.96	42.12	62.17	81.94	120.94	159.40	197.48	199.64	158.43	129.67	108.67	92.78	80.42	70.58	56.01	0.00					
24	2.48	4.82	11.62	22.60	23.90	33.35	43.95	64.87	85.51	126.20	166.33	206.07	212.80	168.87	138.22	115.83	98.90	85.72	75.24	37.90	0.00					
25	2.58	5.02	12.10	23.54	24.89	34.74	45.79	67.57	89.07	131.45	173.27	214.66	226.24	179.53	146.94	123.15	105.15	91.14	79.99	0.00						
26	2.68	5.22	12.58	24.48	25.89	36.13	47.62	70.28	92.63	136.71	180.20	223.24	239.95	190.41	155.85	130.61	111.52	96.66	84.83	0.00						
28	2.89	5.62	13.55	26.36	27.88	38.91	51.28	75.68	99.76	147.23	194.06	240.42	268.16	212.80	174.17	145.97	124.63	108.03	96.62	0.00						
30	3.10	6.02	14.52	28.24	29.87	41.68	54.94	81.09	106.88	157.74	207.92	257.59	297.40	236.00	193.16	161.88	138.22	119.80	18.64	0.00						
32	3.30	6.43	15.49	30.13	31.86	44.46	58.61	86.50	114.01	168.26	221.78	274.76	327.63	259.99	212.80	178.34	135.27	83.92	0.00							
35	3.61	7.03	16.94	32.95	34.85	48.63	64.10	94.60	124.70	184.03	242.57	300.52	358.00	297.40	243.41	203.99	135.27	0.00								
40	4.13	8.03	19.36	37.66	39.83	55.58	73.26	108.12	142.51	210.33	277.22	343.45	409.15	363.35	297.40	153.78	0.00									
45	4.65	9.04	21.78	42.37	44.80	62.53	82.42	121.63	160.32	236.62	311.88	386.38	460.29	433.56	221.34	0.00										
	Type I Manual or Drip Lubrication				Type II Bath or Disc Lubrication							Type III Oil Stream Lubrication														

NOTE: The limiting RPM for each lubrication type is shown in the chart's shaded areas directly above the type I, II or III reference. For optimum results, it is suggested that the roller chain manufacturer be given the opportunity to evaluate the operating condition of chains in the shaded (galling range) speed area. The horsepower ratings of multiple-strand chains are greater than those for single strand chain. See table 1 on page 8 for multiple-strand factors.

160 – 2.000 INCH PITCH

TABLE 15. 160 – 2.000 in. PITCH HORSEPOWER

No. of Teeth	Revolutions Per Minute – Small Sprocket																									
	2	5	10	25	47	50	75	100	150	200	300	400	500	600	700	800	900	1000	1100	1200	1400	1600	1800	2000	2200	2400
11	0.68	1.65	3.20	7.72	14.16	15.02	22.17	29.23	43.14	56.86	83.91	110.60	96.58	73.47	58.31	47.72	39.99	34.15	29.60	25.98	20.61	16.87	14.14	12.07	10.46	0.00
12	0.75	1.80	3.50	8.43	15.45	16.39	24.19	31.88	47.06	62.03	91.54	120.66	110.05	83.72	66.44	54.38	45.57	38.91	33.73	29.60	23.49	19.22	16.11	13.76	0.00	
13	0.81	1.95	3.79	9.13	16.73	17.76	26.21	34.54	50.98	67.19	99.17	130.71	124.09	94.40	74.91	61.31	51.38	43.87	38.03	33.37	26.48	21.68	18.17	0.00		
14	0.87	2.10	4.08	9.83	18.02	19.12	28.22	37.20	54.90	72.36	106.80	140.77	138.68	105.50	83.72	68.52	57.43	49.03	42.50	37.30	29.60	24.23	20.30	0.00		
15	0.93	2.25	4.37	10.53	19.31	20.49	30.24	39.86	58.82	77.53	114.43	150.82	153.80	117.00	92.85	75.99	63.69	54.38	47.13	41.37	32.83	26.87	0.00			
16	0.99	2.40	4.66	11.23	20.59	21.85	32.25	42.51	62.74	82.70	122.05	160.88	169.43	128.89	102.28	83.72	70.16	59.90	51.92	45.57	36.16	29.60	0.00			
17	1.06	2.55	4.95	11.94	21.88	23.22	34.27	45.17	66.66	87.87	129.68	170.93	185.56	141.16	112.02	91.69	76.84	65.61	56.87	49.91	39.61	24.21	0.00			
18	1.12	2.70	5.24	12.64	23.17	24.59	36.29	47.83	70.59	93.04	137.31	180.99	202.17	153.80	122.05	99.90	83.72	71.48	61.96	54.38	43.15	0.00				
19	1.18	2.85	5.54	13.34	24.45	25.95	38.30	50.48	74.51	98.21	144.94	191.04	219.25	166.79	132.36	108.33	90.79	77.52	67.19	58.97	46.80	0.00				
20	1.24	3.00	5.83	14.04	25.74	27.32	40.32	53.14	78.43	103.38	152.57	201.10	236.79	180.13	142.95	117.00	98.05	83.72	72.57	63.69	46.79	0.00				
21	1.30	3.15	6.12	14.74	27.03	28.68	42.33	55.80	82.35	108.54	160.20	211.15	254.77	193.81	153.80	125.88	105.50	90.07	78.08	68.52	0.00					
22	1.37	3.29	6.41	15.45	28.32	30.05	44.35	58.45	86.27	113.71	167.83	221.21	273.18	207.82	164.91	134.98	113.12	96.58	83.72	73.47	0.00					
23	1.43	3.44	6.70	16.15	29.60	31.42	46.36	61.11	90.19	118.88	175.45	231.26	286.51	222.15	176.29	144.29	120.92	103.24	89.49	78.54	0.00					
24	1.49	3.59	6.99	16.85	30.89	32.78	48.38	63.77	94.11	124.05	183.08	241.32	298.97	236.79	187.91	153.80	128.89	110.05	95.39	83.72	0.00					
25	1.55	3.74	7.28	17.55	32.18	34.15	50.40	66.43	98.04	129.22	190.71	251.37	311.42	251.74	199.77	163.51	137.03	117.00	101.41	32.66	0.00					
26	1.62	3.89	7.57	18.26	33.46	35.51	52.41	69.08	101.96	134.39	198.34	261.43	323.88	267.00	211.88	173.42	145.33	124.09	107.56	0.00						
28	1.74	4.19	8.16	19.66	36.04	38.24	56.44	74.40	109.80	144.73	213.60	281.54	348.79	298.39	236.79	193.81	162.42	138.68	36.88	0.00						
30	1.86	4.49	8.74	21.06	38.61	40.98	60.48	79.71	117.64	155.06	228.85	301.65	373.71	330.92	262.61	214.94	180.13	126.46	0.00							
32	1.99	4.79	9.32	22.47	41.19	43.71	64.51	85.03	125.49	165.40	244.11	321.76	398.62	364.56	289.30	236.79	198.44	22.58	0.00							
35	2.17	5.24	10.20	24.57	45.05	47.81	70.55	93.00	137.25	180.91	266.99	351.92	435.99	417.01	330.92	270.86	112.60	0.00								
40	2.49	5.99	11.65	28.09	51.48	54.63	80.63	106.28	156.86	206.75	305.14	402.19	498.28	509.49	404.31	160.63	0.00									
45	2.80	6.74	13.11	31.60	57.92	61.46	90.71	119.57	176.47	232.59	343.28	452.47	560.56	607.95	289.10	0.00										
	Type I Manual or Drip Lubrication				Type II Bath or Disc Lubrication							Type III Oil Stream Lubrication														

NOTE: The limiting RPM for each lubrication type is shown in the chart's shaded areas directly above the type I, II or III reference. For optimum results, it is suggested that the roller chain manufacturer be given the opportunity to evaluate the operating condition of chains in the shaded (galling range) speed area. The horsepower ratings of multiple-strand chains are greater than those for single strand chain. See table 1 on page 8 for multiple-strand factors.

180 – 2.250 INCH PITCH

TABLE 16. 180 – 2.250 INCH PITCH HORSEPOWER

No. of Teeth	Revolutions Per Minute – Small Sprocket																							
	2	5	10	25	43	50	75	100	150	200	300	400	500	600	700	800	900	1000	1100	1200	1400	1600	1800	2000
11	0.94	2.27	4.43	10.66	17.95	20.75	30.62	40.36	59.56	78.51	115.87	148.32	106.13	80.73	64.07	52.44	43.95	37.52	32.52	28.54	22.65	18.54	15.54	0.00
12	1.03	2.48	4.83	11.63	19.58	22.63	33.40	44.03	64.98	85.64	126.40	166.61	120.92	91.99	73.00	59.75	50.07	42.75	37.06	32.52	25.81	21.12	17.70	0.00
13	1.12	2.69	5.23	12.60	21.21	24.52	36.19	47.70	70.39	92.78	136.93	180.49	136.35	103.72	82.31	67.37	56.46	48.21	41.79	36.67	29.10	23.82	0.00	
14	1.20	2.90	5.63	13.57	22.84	26.40	38.97	51.36	75.81	99.92	147.47	194.37	152.38	115.92	91.99	75.29	63.10	53.87	46.70	40.98	32.52	26.62	0.00	
15	1.29	3.10	6.03	14.54	24.48	28.29	41.75	55.03	81.22	107.06	158.00	208.26	169.00	128.56	102.02	83.50	69.98	59.75	51.79	45.45	36.07	0.00		
16	1.37	3.31	6.44	15.51	26.11	30.18	44.54	58.70	86.64	114.19	168.53	222.14	186.17	141.63	112.39	91.99	77.09	65.82	57.05	50.07	39.74	0.00		
17	1.46	3.52	6.84	16.48	27.74	32.06	47.32	62.37	92.05	121.33	179.07	236.02	203.90	155.11	123.09	100.75	84.43	72.09	62.49	54.84	43.52	0.00		
18	1.54	3.72	7.24	17.45	29.37	33.95	50.10	66.04	97.47	128.47	189.60	249.91	222.15	169.00	134.11	109.77	91.99	78.54	68.08	59.75	0.00			
19	1.63	3.93	7.64	18.42	31.00	35.83	52.89	69.71	102.88	135.60	200.13	263.79	240.92	183.27	145.44	119.04	99.76	85.18	73.83	64.80	0.00			
20	1.72	4.14	8.05	19.39	32.64	37.72	55.67	73.38	108.30	142.74	210.67	277.68	260.19	197.93	157.07	128.56	107.74	91.99	79.74	69.98	0.00			
21	1.80	4.34	8.45	20.36	34.27	39.61	58.45	77.05	113.71	149.88	221.20	291.56	279.94	212.96	169.00	138.32	115.92	98.97	85.79	75.29	0.00			
22	1.89	4.55	8.85	21.33	35.90	41.49	61.24	80.71	119.12	157.02	231.73	305.44	300.17	228.35	181.21	148.32	124.30	106.13	91.99	0.00				
23	1.97	4.76	9.25	22.30	37.53	43.38	64.02	84.38	124.54	164.15	242.27	319.33	320.87	244.10	193.70	158.54	132.87	113.45	98.33	0.00				
24	2.06	4.96	9.65	23.27	39.16	45.26	66.80	88.05	129.95	171.29	252.80	333.21	342.02	260.19	206.47	169.00	141.63	120.92	40.34	0.00				
25	2.15	5.17	10.06	24.24	40.79	47.15	69.59	91.72	135.37	178.43	263.33	347.10	363.62	276.62	219.51	179.67	150.57	128.56	0.00					
26	2.23	5.38	10.46	25.21	42.43	49.04	72.37	95.39	140.78	185.56	273.87	360.98	385.66	293.38	232.81	190.55	159.69	122.43	0.00					
28	2.40	5.79	11.26	27.15	45.69	52.81	77.94	102.73	151.61	199.84	294.93	388.75	431.00	327.87	260.19	212.96	178.47	0.00						
30	2.57	6.20	12.07	29.09	48.95	56.58	83.50	110.07	162.44	214.11	316.00	416.51	477.99	363.62	288.56	236.18	128.92	0.00						
32	2.75	6.62	12.87	31.02	52.22	60.35	89.07	117.40	173.27	228.39	337.07	444.28	526.58	400.58	317.89	260.19	0.00							
35	3.00	7.24	14.08	33.93	57.11	66.01	97.42	128.41	189.52	249.80	368.67	485.93	602.34	458.22	363.62	142.51	0.00							
40	3.43	8.27	16.09	38.78	65.27	75.44	111.34	146.75	216.59	285.48	421.34	555.35	688.02	559.83	254.20	0.00								
45	3.86	9.31	18.10	43.63	73.43	84.87	125.26	165.10	243.66	321.17	474.00	624.77	774.03	480.00	0.00									
	Type I Manual or Drip Lubrication				Type II Bath or Disc Lubrication							Type III Oil Stream Lubrication												

NOTE: The limiting RPM for each lubrication type is shown in the chart's shaded areas directly above the type I, II or III reference. For optimum results, it is suggested that the roller chain manufacturer be given the opportunity to evaluate the operating condition of chains in the shaded (galling range) speed area. The horsepower ratings of multiple-strand chains are greater than those for single strand chain. See table 1 on page 8 for multiple-strand factors.

200 – 2.500 INCH PITCH

TABLE 17. 200 – 2.500 INCH PITCH HORSEPOWER

No. of Teeth	Revolutions Per Minute – Small Sprocket																							
	2	5	10	25	40	50	75	100	150	200	250	300	400	500	600	700	800	900	1000	1100	1200	1400	1600	1800
11	1.25	3.02	5.88	14.16	22.23	27.54	40.65	53.58	79.08	104.24	129.14	153.84	161.36	115.46	87.83	69.70	57.05	47.81	40.82	35.38	31.05	24.64	20.17	0.00
12	1.37	3.29	6.41	15.45	24.25	30.05	44.35	58.45	86.27	113.71	140.88	167.82	183.86	131.56	100.08	79.42	65.00	54.48	46.51	40.32	35.38	28.08	22.98	0.00
13	1.48	3.57	6.94	16.73	26.28	32.55	48.04	63.33	93.46	123.19	152.62	181.81	207.31	148.34	112.85	89.55	73.30	61.43	52.45	45.46	39.90	31.66	0.00	
14	1.59	3.84	7.48	18.02	28.30	35.06	51.74	68.20	100.65	132.66	164.36	195.79	231.69	165.78	126.11	100.08	81.91	68.65	58.61	50.80	44.59	35.38	0.00	
15	1.71	4.12	8.01	19.31	30.32	37.56	55.43	73.07	107.84	142.14	176.09	209.78	256.95	183.86	139.87	110.99	90.85	76.13	65.00	56.34	49.45	37.46	0.00	
16	1.82	4.39	8.55	20.60	32.34	40.06	59.13	77.94	115.03	151.61	187.83	223.76	283.07	202.55	154.08	122.27	100.08	83.87	71.61	62.07	54.48	0.00		
17	1.94	4.67	9.08	21.88	34.36	42.57	62.83	82.81	122.22	161.09	199.57	237.75	310.02	221.83	168.75	133.91	109.61	91.86	78.43	67.98	59.66	0.00		
18	2.05	4.94	9.61	23.17	36.38	45.07	66.52	87.68	129.41	170.57	211.31	251.73	331.81	241.69	183.86	145.90	119.42	100.08	85.45	74.07	65.00			
19	2.16	5.22	10.15	24.46	38.40	47.58	70.22	92.55	136.59	180.04	223.05	265.72	350.24	262.11	199.39	158.23	129.51	108.53	92.67	80.32	2.22			
20	2.28	5.49	10.68	25.74	40.42	50.08	73.91	97.42	143.78	189.52	234.79	279.70	368.67	283.07	215.34	170.88	139.87	117.21	100.08	86.75	0.00			
21	2.39	5.77	11.22	27.03	42.45	52.59	77.61	102.29	150.97	198.99	246.53	293.69	387.11	304.56	231.69	183.86	150.49	126.11	107.68	32.68	0.00			
22	2.51	6.04	11.75	28.32	44.47	55.09	81.30	107.17	158.16	208.47	258.27	307.68	405.54	326.57	248.43	197.15	161.36	135.23	115.46	0.00				
23	2.62	6.31	12.28	29.61	46.49	57.59	85.00	112.04	165.35	217.95	270.01	321.66	423.97	349.09	265.56	210.74	172.49	144.55	104.48	0.00				
24	2.73	6.59	12.82	30.89	48.51	60.10	88.70	116.91	172.54	227.42	281.75	335.65	442.41	372.10	283.07	224.63	183.86	154.08	21.71	0.00				
25	2.85	6.86	13.35	32.18	50.53	62.60	92.39	121.78	179.73	236.90	293.49	349.63	460.84	395.60	300.94	238.82	195.47	163.81	0.00					
26	2.96	7.14	13.89	33.47	52.55	65.11	96.09	126.65	186.92	246.37	305.23	363.62	479.27	419.57	319.18	253.29	207.31	151.14	0.00					
	Type I Manual or Drip Lubrication				Type II Bath or Disc Lubrication								Type III Oil Stream Lubrication											

NOTE: The limiting RPM for each lubrication type is shown in the chart's shaded areas directly above the type I, II or III reference. For optimum results, it is suggested that the roller chain manufacturer be given the opportunity to evaluate the operating condition of chains in the shaded (galling range) speed area. The horsepower ratings of multiple-strand chains are greater than those for single strand chain. See table 1 on page 8 for multiple-strand factors.

240 – 3.000 INCH PITCH

TABLE 18. 240 – 3.000 INCH PITCH HORSEPOWER

No. of Teeth	Revolutions Per Minute – Small Sprocket																							
	2	5	10	25	36	50	75	100	150	200	250	300	400	500	600	700	800	900	1000	1100	1200	1300	1400	1500
11	2.02	4.86	9.46	22.81	32.36	44.36	65.47	86.30	127.37	167.88	207.99	247.77	186.70	133.59	101.63	80.65	66.01	55.32	47.23	40.94	35.93	31.87	28.51	0.00
12	2.20	5.31	10.32	24.88	35.31	48.40	71.43	94.15	138.95	183.14	226.89	270.30	212.73	152.22	115.80	91.89	75.21	63.03	53.82	46.65	40.94	36.31	2.11	0.00
13	2.39	5.75	11.18	26.95	38.25	52.43	77.38	101.99	150.53	198.41	245.80	292.82	239.87	171.64	130.57	103.61	84.81	71.07	60.68	52.60	46.16	38.13	0.00	
14	2.57	6.19	12.04	29.02	41.19	56.46	83.33	109.84	162.11	213.67	264.71	315.34	268.07	191.82	145.92	115.80	94.78	79.43	67.82	58.78	51.59	0.00		
15	2.75	6.63	12.90	31.10	44.13	60.50	89.28	117.68	173.68	228.93	283.62	337.87	297.30	212.73	161.83	128.42	105.11	88.09	75.21	65.19	0.00			
16	2.94	7.08	13.76	33.17	47.08	64.53	95.24	125.53	185.26	244.19	302.53	360.39	327.52	234.35	178.28	141.47	115.80	97.04	82.86	71.82	0.00			
17	3.12	7.52	14.62	35.24	50.02	68.56	101.19	133.37	196.84	259.45	321.43	382.92	358.70	256.66	195.25	154.94	126.82	106.28	90.74	0.00				
18	3.30	7.96	15.48	37.32	52.96	72.59	107.14	141.22	208.42	274.71	340.34	405.44	390.81	279.64	212.73	168.81	138.17	115.80	98.87	0.00				
19	3.49	8.40	16.34	39.39	55.90	76.63	113.09	149.06	220.00	289.98	359.25	427.97	423.82	303.26	230.70	183.08	149.84	125.58	3.20	0.00				
20	3.67	8.84	17.20	41.46	58.84	80.66	119.04	156.91	231.58	305.24	378.16	450.49	457.72	327.52	249.15	197.72	161.83	135.62	0.00					
21	3.85	9.29	18.07	43.54	61.79	84.69	125.00	164.76	243.16	320.50	397.07	473.02	492.48	352.39	268.07	212.73	174.12	109.86	0.00					
22	4.04	9.73	18.93	45.61	64.73	88.73	130.95	172.60	254.74	335.76	415.97	495.54	528.07	377.85	287.44	228.10	186.70	0.00						
23	4.22	10.17	19.79	47.68	67.67	92.76	136.90	180.45	266.32	351.02	434.88	518.07	564.48	403.91	307.26	243.83	199.57	0.00						
24	4.40	10.61	20.65	49.76	70.61	96.79	142.85	188.29	277.89	366.29	453.79	540.59	601.69	430.53	327.52	259.91	188.30	0.00						
25	4.59	11.06	21.51	51.83	73.55	100.83	148.81	196.14	289.47	381.55	472.70	563.12	639.68	457.72	348.20	276.32	73.47	0.00						
26	4.77	11.50	22.37	53.90	76.50	104.86	154.76	203.98	301.05	396.81	491.61	585.64	678.45	485.46	369.30	293.06	0.00							
	Type I Manual or Drip Lubrication				Type II Bath or Disc Lubrication								Type III Oil Stream Lubrication											

NOTE: The limiting RPM for each lubrication type is shown in the chart's shaded areas directly above the type I, II or III reference. For optimum results, it is suggested that the roller chain manufacturer be given the opportunity to evaluate the operating condition of chains in the shaded (galling range) speed area. The horsepower ratings of multiple-strand chains are greater than those for single strand chain. See table 1 on page 8 for multiple-strand factors.

ROLLER CHAIN DIMENSIONS AND HORSEPOWER TABLES – INCH • HEAVY SERIES

HEAVY SERIES 60H – 0.750 INCH PITCH

TABLE 19. HORSEPOWER RATINGS – SINGLE STRAND ROLLER CHAIN NO. 60H

No. of Teeth	Speed, min-1, Small Sprocket																												
	10	25	50	90	100	200	300	400	500	600	700	800	900	1000	1100	1200	1400	1600	1800	2000	2500	3000	3500	4000	4500	5000	5500	6000
11	0.22	0.53	1.02	1.80	1.99	3.87	5.72	7.53	9.33	11.12	12.89	14.66	16.41	15.58	13.51	11.85	9.41	7.70	6.45	5.51	3.94	3.00	2.38	1.95	1.63	1.39	1.21	0.00
12	0.24	0.57	1.12	1.96	2.17	4.23	6.24	8.22	10.18	12.13	14.07	15.99	17.90	17.75	15.39	13.51	10.72	8.77	7.35	6.28	4.49	3.42	2.71	2.22	1.86	1.59	0.00	
13	0.26	0.62	1.21	2.13	2.35	4.58	6.76	8.90	11.03	13.14	15.24	17.32	19.39	20.02	17.35	15.23	12.08	9.89	8.29	7.08	5.06	3.85	3.06	2.50	2.10	1.79	0.00	
14	0.28	0.67	1.30	2.29	2.53	4.93	7.27	9.59	11.88	14.15	16.41	18.65	20.89	22.37	19.39	17.02	13.51	11.05	9.26	7.91	5.66	4.31	3.42	2.80	2.34	0.00		
15	0.30	0.72	1.40	2.45	2.71	5.28	7.79	10.27	12.73	15.16	17.58	19.99	22.38	24.76	21.51	18.87	14.98	12.26	10.27	8.77	6.28	4.77	3.79	3.10	2.60	0.00		
16	0.32	0.77	1.49	2.62	2.90	5.63	8.31	10.96	13.58	16.17	18.75	21.32	23.87	26.41	23.69	20.79	16.50	13.51	11.32	9.66	6.91	5.26	4.17	3.42	0.00			
17	0.34	0.81	1.58	2.78	3.08	5.99	8.83	11.64	14.43	17.18	19.93	22.65	25.36	28.06	25.95	22.77	18.07	14.79	12.40	10.58	7.57	5.76	4.57	3.74	0.00			
18	0.36	0.86	1.67	2.94	3.26	6.34	9.35	12.33	15.27	18.20	21.10	23.98	26.85	29.71	28.27	24.81	19.69	16.11	13.51	11.53	8.25	6.28	4.98	1.06	0.00			
19	0.38	0.91	1.77	3.11	3.44	6.69	9.87	13.01	16.12	19.21	22.27	25.32	28.35	31.36	30.66	26.91	21.35	17.48	14.65	12.50	8.95	6.81	5.40	0.00				
20	0.40	0.96	1.86	3.27	3.62	7.04	10.39	13.70	16.97	20.22	23.44	26.65	29.84	33.01	33.11	29.06	23.06	18.87	15.82	13.51	9.66	7.35	5.83	0.00				
21	0.42	1.00	1.95	3.44	3.80	7.39	10.91	14.38	17.82	21.23	24.61	27.98	31.33	34.66	35.62	31.26	24.81	20.31	17.02	14.53	10.40	7.91	4.87	0.00				
22	0.44	1.05	2.05	3.60	3.98	7.75	11.43	15.07	18.67	22.24	25.79	29.31	32.82	36.32	38.20	33.52	26.60	21.77	18.25	15.58	11.15	8.48	0.00					
23	0.46	1.10	2.14	3.76	4.16	8.10	11.95	15.75	19.52	23.25	26.96	30.65	34.31	37.97	40.83	35.84	28.44	23.28	19.51	16.66	11.92	9.07	0.00					
24	0.48	1.15	2.23	3.93	4.34	8.45	12.47	16.44	20.37	24.26	28.13	31.98	35.81	39.62	43.41	38.20	30.31	24.81	20.79	17.75	12.70	9.66	0.00					
25	0.50	1.20	2.33	4.09	4.52	8.80	12.99	17.12	21.21	25.27	29.30	33.31	37.30	41.27	45.22	40.61	32.23	26.38	22.11	18.87	13.51	10.27	0.00					
26	0.52	1.24	2.42	4.25	4.71	9.15	13.51	17.81	22.06	26.28	30.47	34.64	38.79	42.92	47.03	43.07	34.18	27.98	23.44	20.02	14.32	4.17	0.00					
28	0.56	1.34	2.61	4.58	5.07	9.86	14.55	19.18	23.76	28.30	32.82	37.31	74.11	46.22	50.65	48.14	38.20	31.26	26.20	22.37	16.01	0.00						
30	0.60	1.43	2.79	4.91	5.43	10.56	15.59	20.55	25.46	30.33	35.16	39.97	82.19	49.52	54.27	53.38	42.36	34.67	29.06	24.81	17.75	0.00						
32	0.64	1.53	2.98	5.23	5.79	11.27	16.63	21.92	27.15	32.35	37.51	42.64	47.74	52.82	57.88	58.81	46.67	38.20	32.01	27.33	11.45	0.00						
35	0.69	1.67	3.26	5.73	6.33	12.32	18.19	23.97	29.70	35.38	41.02	46.63	52.22	57.77	63.31	67.27	53.38	43.69	36.62	31.26	0.00							
40	0.79	1.91	3.72	6.54	7.24	14.08	20.79	27.40	33.94	40.43	46.88	53.30	59.68	66.03	72.35	78.66	65.22	53.38	44.74	29.65	0.00							
45	0.89	2.15	4.19	7.36	8.14	15.84	23.38	30.82	38.18	45.49	52.74	59.96	67.14	74.28	81.40	88.49	77.83	63.70	37.00	0.00								
	Type I Manual or Drip Lubrication			Type II Bath or Disc Lubrication									Type III Oil Stream Lubrication															

NOTE: The limiting RPM for each lubrication type is shown in the chart's shaded areas directly above the type I, II or III reference. For optimum results, it is suggested that the roller chain manufacturer be given the opportunity to evaluate the operating condition of chains in the shaded (galling range) speed area. The horsepower ratings of multiple-strand chains are greater than those for single strand chain. See table 1 on page 8 for multiple-strand factors.

HEAVY SERIES 80H – 1.000 INCH PITCH

TABLE 20. HORSEPOWER RATINGS – SINGLE STRAND ROLLER CHAIN NO. 80H

No. of Teeth	Speed, min-1, Small Sprocket																												
	10	25	50	70	100	150	200	300	400	500	600	700	800	900	1000	1100	1200	1400	1600	1800	2000	2200	2400	2700	3000	3300	3600	4000	4500
11	0.49	1.19	2.31	3.19	4.50	6.64	8.75	12.91	17.02	21.08	25.12	29.12	27.41	22.97	19.61	17.00	14.92	11.84	9.69	8.12	6.93	6.01	5.27	4.42	3.77	3.27	2.87	2.45	0.00
12	0.54	1.30	2.52	3.48	4.91	7.24	9.54	14.09	18.57	23.00	27.40	31.77	31.23	26.17	22.35	19.37	17.00	13.49	11.04	9.25	7.90	6.85	6.01	5.04	4.30	3.73	3.27	2.79	0.00
13	0.58	1.40	2.73	3.77	5.31	7.84	10.34	15.26	20.11	24.92	29.68	34.42	35.22	29.51	25.20	21.84	19.17	15.21	12.45	10.43	8.91	7.72	6.78	5.68	4.85	4.20	3.69	0.00	
14	0.63	1.51	2.94	4.06	5.72	8.45	11.13	16.43	21.66	26.83	31.97	37.07	39.36	32.98	28.16	24.41	21.42	17.00	13.91	11.66	9.96	8.63	7.57	6.35	5.42	4.70	2.02	0.00	
15	0.67	1.62	3.15	4.35	6.13	9.05	11.93	17.61	23.21	28.75	34.25	39.71	43.65	36.58	31.23	27.07	23.76	18.85	15.43	12.93	11.04	9.57	8.40	7.04	6.01	5.21	0.00		
16	0.72	1.73	3.36	4.64	6.54	9.65	12.73	18.78	24.75	30.67	36.53	42.36	48.08	40.30	34.41	29.82	26.17	20.77	17.00	14.25	12.16	10.54	9.25	7.76	6.62	0.00			
17	0.76	1.84	3.57	4.94	6.95	10.26	13.52	19.95	26.30	32.59	38.82	45.01	51.17	44.13	37.68	32.66	28.66	22.75	18.62	15.60	13.32	11.55	10.13	8.49	7.25	0.00			
18	0.81	1.94	3.78	5.23	7.36	10.86	14.32	21.13	27.85	34.50	41.10	47.66	54.17	48.08	41.05	35.59	31.23	24.78	20.29	17.00	14.51	12.58	11.04	9.25	1.88	0.00			
19	0.85	2.05	3.99	5.52	7.77	11.46	15.11	22.30	29.40	36.42	43.38	50.30	57.18	52.15	44.52	38.59	33.87	26.88	22.00	18.44	15.74	13.64	11.97	10.04	0.00				
20	0.90	2.16	4.20	5.81	8.18	12.07	15.91	23.48	30.94	38.34	45.67	52.95	60.19	56.32	48.08	41.68	36.58	29.03	23.76	19.91	17.00	14.74	12.93	10.84	0.00				
21	0.94	2.27	4.41	6.10	8.59	12.67	16.70	24.65	32.49	40.25	47.95	55.60	63.20	60.59	51.73	44.84	39.36	31.23	25.56	21.42	18.29	15.85	13.91	0.00					
22	0.99	2.38	4.62	6.39	8.99	13.27	17.50	25.82	34.04	42.17	50.24	58.25	66.21	64.97	55.47	48.08	42.20	33.49	27.41	22.97	19.61	17.00	14.92	0.00					
23	1.03	2.48	4.83	6.68	9.40	13.88	18.29	27.00	35.58	44.09	52.52	60.89	69.22	69.45	59.30	51.40	45.11	35.80	29.30	24.55	20.97	18.17	15.95	0.00					
24	1.08	2.59	5.04	6.97	9.81	14.48	19.09	28.17	37.13	46.00	54.80	63.54	72.23	74.03	63.21	54.79	48.08	38.16	31.23	26.17	22.35	19.37	5.44	0.00					
25	1.12	2.70	5.25	7.26	10.22	15.09	19.88	29.35	38.68	47.92	57.09	66.19	75.24	78.70	67.20	58.25	51.12	40.57	33.20	27.83	23.76	20.59	0.00						
26	1.17	2.81	5.46	7.55	10.63	15.69	20.68	30.52	40.23	49.84	59.37	68.84	78.25	83.47	71.27	61.78	54.22	43.02	35.22	29.51	25.20	16.77	0.00						
28	1.26	3.03	5.88	8.13	11.45	16.90	22.27	32.87	43.32	53.67	63.94	74.13	84.27	93.29	79.65	69.04	60.59	48.08	39.36	32.98	28.16	0.00							
30	1.34	3.24	6.31	8.71	12.27	18.10	23.86	35.21	46.41	57.50	68.50	79.43	90.29	101.10	88.33	76.57	67.20	53.33	43.65	36.58	12.26	0.00							
32	1.43	3.46	6.73	9.29	13.08	19.31	25.45	37.56	49.51	61.34	73.07	84.72	96.31	107.84	97.31	84.35	74.03	58.75	48.08	39.43	0.00								
35	1.57	3.78	7.36	10.16	14.31	21.12	27.84	41.08	54.15	67.09	79.92	92.67	105.34	117.95	111.31	96.49	84.68	67.20	55.00	5.58	0.00								
40	1.79	4.32	8.41	11.61	16.35	24.14	31.81	46.95	61.89	76.67	91.34	105.90	120.39	134.80	136.00	117.88	103.46	82.10	14.36	0.00									
45	2.02	4.86	9.46	13.06	18.40	27.15	35.79	52.82	69.62	86.25	102.75	119.14	135.44	151.65	162.28	140.66	123.45	43.25	0.00										
	Type I Manual or Drip Lubrication			Type II Bath or Disc Lubrication									Type III Oil Stream Lubrication																

NOTE: The limiting RPM for each lubrication type is shown in the chart's shaded areas directly above the type I, II or III reference. For optimum results, it is suggested that the roller chain manufacturer be given the opportunity to evaluate the operating condition of chains in the shaded (galling range) speed area. The horsepower ratings of multiple-strand chains are greater than those for single strand chain. See table 1 on page 8 for multiple-strand factors.

HEAVY SERIES 100H – 1.250 INCH PITCH

TABLE 21. HORSEPOWER RATINGS – SINGLE STRAND ROLLER CHAIN NO. 100H

No. of Teeth	Speed, min-1, Small Sprocket																												
	5	10	25	50	58	75	100	200	300	400	500	600	700	800	900	1000	1100	1200	1400	1600	1800	2000	2200	2400	2700	3000	3300	3600	
11	0.48	0.93	2.23	4.34	5.01	6.41	8.45	16.43	24.25	31.96	39.60	47.18	40.03	32.77	27.46	23.45	20.32	17.84	14.15	11.58	9.71	8.29	7.19	6.31	5.28	4.51	3.91	0.00	
12	0.52	1.01	2.44	4.74	5.46	6.99	9.21	17.93	26.46	34.87	43.20	51.46	45.61	37.33	31.29	26.71	23.16	20.32	16.13	13.20	11.06	9.45	8.19	7.19	6.02	5.14	0.00		
13	0.56	1.09	2.64	5.13	5.92	7.57	9.98	19.42	28.66	37.78	46.80	55.75	51.43	42.10	35.28	30.12	26.11	22.92	18.18	14.88	12.47	10.65	9.23	8.10	6.79	5.80	0.00		
14	0.61	1.18	2.84	5.53	6.37	8.16	10.75	20.91	30.86	40.68	50.40	60.04	57.48	47.05	39.43	33.66	29.18	25.61	20.32	16.63	13.94	11.90	10.32	9.05	7.59	0.00			
15	0.65	1.26	3.04	5.92	6.83	8.74	11.52	22.41	33.07	43.59	54.00	64.33	63.75	52.18	43.73	37.33	32.36	28.40	22.54	18.45	15.46	13.20	11.44	10.04	8.42	0.00			
16	0.69	1.35	3.25	6.32	7.28	9.32	12.29	23.90	35.27	46.49	57.60	68.62	70.23	57.48	48.17	41.13	35.65	31.29	24.83	20.32	17.03	14.54	12.60	11.06	0.00				
17	0.74	1.43	3.45	6.71	7.74	9.90	13.05	25.39	37.48	49.40	61.20	72.91	76.91	62.95	52.76	45.05	39.04	34.27	27.19	22.26	18.65	15.93	13.80	12.12	0.00				
18	0.78	1.52	3.65	7.11	8.19	10.49	13.82	26.89	39.68	52.31	64.80	77.20	83.80	68.59	57.48	49.08	42.54	37.33	29.63	24.25	20.32	17.35	15.04	2.94	0.00				
19	0.82	1.60	3.86	7.50	8.65	11.07	14.59	28.38	41.89	55.21	68.40	81.48	90.88	74.38	62.34	53.22	46.13	40.49	32.13	26.30	22.04	18.82	16.31	0.00					
20	0.87	1.68	4.06	7.89	9.10	11.65	15.36	29.88	44.09	58.12	72.00	85.77	98.15	80.33	67.32	57.48	49.82	43.73	34.70	28.40	23.80	20.32	7.77	0.00					
21	0.91	1.77	4.26	8.29	9.56	12.23	16.13	31.37	46.30	61.02	75.60	90.06	104.43	86.43	72.43	61.85	53.61	47.05	37.33	30.56	25.61	21.87	0.00						
22	0.95	1.85	4.46	8.68	10.01	12.82	16.89	32.86	48.50	63.93	79.20	94.35	109.40	92.68	77.67	66.31	57.48	50.45	40.03	32.77	27.46	21.67	0.00						
23	1.00	1.94	4.67	9.08	10.47	13.40	17.66	34.36	50.71	66.83	82.80	98.64	114.37	99.07	83.02	70.89	61.44	53.93	42.79	35.03	29.35	2.94	0.00						
24	1.04	2.02	4.87	9.47	10.92	13.98	18.43	35.85	52.91	69.74	86.40	102.93	119.34	105.60	88.50	75.56	65.49	57.48	45.61	37.33	31.29	0.00							
25	1.08	2.10	5.07	9.87	11.38	14.56	19.20	37.34	55.12	72.65	90.00	107.22	124.32	112.27	94.09	80.33	69.63	61.11	48.49	39.69	29.68	0.00							
26	1.13	2.19	5.28	10.26	11.83	15.15	19.97	38.84	57.32	75.55	93.60	111.51	129.29	119.07	99.79	85.20	73.85	64.81	51.43	42.10	11.58	0.00							
28	1.21	2.36	5.68	11.05	12.75	16.31	21.50	41.83	61.73	81.36	100.80	120.08	139.24	133.07	111.52	95.22	82.53	72.43	57.48	47.05	0.00								
30	1.30	2.53	6.09	11.84	13.66	17.48	23.04	44.81	66.14	87.18	108.00	128.66	149.18	147.58	123.68	105.60	91.53	80.33	63.75	19.16	0.00								
32	1.39	2.69	6.49	12.63	14.57	18.64	24.57	47.80	70.55	92.99	115.20	137.24	159.13	162.58	136.25	116.33	100.84	88.50	70.23	0.00									
35	1.51	2.95	7.10	13.82	15.93	20.39	26.88	52.28	77.16	101.71	126.00	150.10	174.04	185.97	155.85	133.07	115.34	101.23	33.74	0.00									
40	1.73	3.37	8.12	15.79	18.21	23.30	30.72	59.75	88.18	116.23	144.00	171.55	198.91	226.11	190.42	162.58	140.92	82.37	0.00										
45	1.95	3.79	9.13	17.76	20.48	26.22	34.55	67.22	99.21	130.76	162.00	192.99	223.77	254.38	227.21	194.00	85.51	0.00											
	Type I Manual or Drip Lubrication			Type II Bath or Disc Lubrication								Type III Oil Stream Lubrication																	

NOTE: The limiting RPM for each lubrication type is shown in the chart's shaded areas directly above the type I, II or III reference. For optimum results, it is suggested that the roller chain manufacturer be given the opportunity to evaluate the operating condition of chains in the shaded (galling range) speed area. The horsepower ratings of multiple-strand chains are greater than those for single strand chain. See table 1 on page 8 for multiple-strand factors.

HEAVY SERIES 120H – 1.500 INCH PITCH

TABLE 22. HORSEPOWER RATINGS – SINGLE STRAND ROLLER CHAIN NO. 120H

No. of Teeth	Speed, min-1, Small Sprocket																										
	5	10	25	50	75	100	150	200	300	400	500	600	700	800	900	1000	1100	1200	1400	1600	1800	2000	2200	2400	2700	3000	
11	0.79	1.54	3.72	7.23	10.67	14.06	20.76	27.36	40.38	53.22	65.93	58.37	46.32	37.91	31.77	27.13	23.51	20.64	16.38	13.40	11.23	9.59	8.31	7.30	6.11	0.00	
12	0.86	1.68	4.05	7.89	11.64	15.34	22.64	29.85	44.05	58.06	71.93	66.51	52.78	43.20	36.20	30.91	26.79	23.51	18.66	15.27	12.80	10.93	9.47	8.31	1.06	0.00	
13	0.94	1.82	4.39	8.54	12.61	16.62	24.53	32.33	47.72	62.90	77.92	74.99	59.51	48.71	40.82	34.85	30.21	26.51	21.04	17.22	14.43	12.32	10.68	9.37	0.00		
14	1.01	1.96	4.73	9.20	13.58	17.90	26.42	34.82	51.39	67.73	83.92	83.81	66.51	54.44	45.62	38.95	33.76	29.63	23.51	19.25	16.13	13.77	11.94	4.55	0.00		
15	1.08	2.10	5.07	9.86	14.55	19.18	28.30	37.31	55.06	72.57	89.91	92.95	73.76	60.37	50.59	43.20	37.44	32.86	26.08	21.34	17.89	15.27	13.24	0.00			
16	1.15	2.24	5.41	10.52	15.52	20.46	30.19	39.79	58.73	77.41	95.90	102.39	81.26	66.51	55.74	47.59	41.25	36.20	28.73	23.51	19.71	16.83	0.00				
17	1.23	2.38	5.74	11.17	16.49	21.73	32.08	42.28	62.40	82.25	101.90	112.14	88.99	72.84	61.04	52.12	45.18	39.65	31.46	25.75	21.58	18.43	0.00				
18	1.30	2.52	6.08	11.83	17.46	23.01	33.96	44.77	66.07	87.09	107.89	122.18	96.96	79.36	66.51	56.78	49.22	43.20	34.28	28.06	23.51	4.23	0.00				
19	1.37	2.66	6.42	12.49	18.43	24.29	35.85	47.26	69.74	91.93	113.89	132.50	105.15	86.06	72.13	61.58	53.38	46.85	37.18	30.43	25.50	0.00					
20	1.44	2.80	6.76	13.14	19.40	25.57	37.74	49.74	73.41	96.76	119.88	142.81	113.56	92.95	77.89	66.51	57.65	50.59	40.15	32.86	24.58	0.00					
21	1.51	2.94	7.09	13.80	20.37	26.85	39.63	52.23	77.08	101.60	125.87	149.95	122.18	100.00	83.81	71.56	62.02	54.44	43.20	35.36	0.00						
22	1.59	3.08	7.43	14.46	21.34	28.13	41.51	54.72	80.75	106.44	131.87	157.09	131.01	107.23	89.87	76.73	66.51	58.37	46.32	37.91	0.00						
23	1.66	3.22	7.77	15.12	22.31	29.41	43.40	57.20	84.42	111.28	137.86	164.23	140.04	114.62	96.06	82.02	71.09	62.39	49.51	38.38	0.00						
24	1.73	3.36	8.11	15.77	23.28	30.68	45.29	59.69	88.10	116.12	143.86	171.37	149.28	122.18	102.39	87.43	75.78	66.51	52.78	12.24	0.00						
25	1.80	3.50	8.45	16.43	24.25	31.96	47.17	62.18	91.77	120.96	149.85	178.51	158.70	129.90	108.86	92.95	80.56	70.71	56.11	0.00							
26	1.87	3.64	8.78	17.09	25.22	33.24	49.06	64.66	95.44	125.79	155.84	185.65	168.32	137.77	115.46	98.58	85.45	74.99	59.51	0.00							
28	2.02	3.93	9.46	18.40	27.16	35.80	52.83	69.64	102.78	135.47	167.83	199.94	188.11	153.97	129.03	110.17	95.49	83.81	30.35	0.00							
30	2.16	4.21	10.14	19.72	29.10	38.36	56.61	74.61	110.12	145.15	179.82	214.22	208.62	170.75	143.10	122.18	105.90	92.95	0.00								
32	2.31	4.49	10.81	21.03	31.04	40.91	60.38	79.59	117.46	154.82	191.81	228.50	229.83	188.11	157.65	134.60	116.67	88.71	0.00								
35	2.52	4.91	11.82	23.00	33.95	44.75	66.04	87.05	128.47	169.34	209.79	249.92	262.89	215.17	180.33	153.97	133.46	12.54	0.00								
40	2.88	5.61	13.51	26.29	38.80	51.14	75.48	99.48	146.83	193.53	239.76	285.62	321.19	262.89	220.32	118.61	0.00										
45	3.24	6.31	15.20	29.58	43.65	57.53	84.91	111.92	165.18	217.72	269.73	321.32	372.57	278.98	148.03	0.00											
	Type I Manual or Drip Lubrication			Type II Bath or Disc Lubrication							Type III Oil Stream Lubrication																

NOTE: The limiting RPM for each lubrication type is shown in the chart's shaded areas directly above the type I, II or III reference. For optimum results, it is suggested that the roller chain manufacturer be given the opportunity to evaluate the operating condition of chains in the shaded (galling range) speed area. The horsepower ratings of multiple-strand chains are greater than those for single strand chain. See table 1 on page 8 for multiple-strand factors.

HEAVY SERIES 140H – 1.750 INCH PITCH

TABLE 23. HORSEPOWER RATINGS – SINGLE STRAND ROLLER CHAIN NO. 140H

No. of Teeth	Speed, min-1, Small Sprocket																										
	5	10	25	44	50	75	100	150	200	300	400	500	600	700	800	900	1000	1100	1200	1400	1600	1800	2000	2200	2400	2700
11	1.21	2.36	5.69	9.79	11.07	16.34	21.54	31.79	41.90	61.84	81.50	86.80	66.03	52.40	42.89	35.94	30.69	26.60	23.35	18.53	15.16	12.71	10.85	9.40	8.25	0.00
12	1.32	2.58	6.21	10.68	12.08	17.83	23.50	34.68	45.71	67.46	88.91	98.90	75.24	59.70	48.87	40.95	34.97	30.31	26.60	21.11	17.28	14.48	12.36	10.72	0.00	
13	1.43	2.79	6.73	11.57	13.08	19.31	25.45	37.57	49.52	73.08	96.32	111.52	84.83	67.32	55.10	46.18	39.43	34.17	29.99	23.80	19.48	16.33	13.94	0.00		
14	1.55	3.01	7.24	12.46	14.09	20.80	27.41	40.46	53.32	78.70	103.73	124.63	94.81	75.24	61.58	51.61	44.06	38.19	33.52	26.60	21.77	18.25	15.58	0.00		
15	1.66	3.22	7.76	13.35	15.10	22.28	29.37	43.35	57.13	84.32	111.14	137.69	105.15	83.44	68.29	57.23	48.87	42.36	37.17	29.50	24.15	20.24	0.00			
16	1.77	3.44	8.28	14.24	16.10	23.77	31.33	46.24	60.94	89.94	118.55	146.87	115.83	91.92	75.24	63.05	53.83	46.66	40.95	32.50	26.60	22.29	0.00			
17	1.88	3.65	8.80	15.13	17.11	25.25	33.29	49.13	64.75	95.56	125.96	156.05	126.86	100.67	82.40	69.05	58.96	51.11	44.85	35.59	29.13	0.00				
18	1.99	3.86	9.31	16.02	18.12	26.74	35.24	52.02	68.56	101.19	133.37	165.23	138.22	109.68	89.77	75.24	64.24	55.68	48.87	38.78	31.74	0.00				
19	2.10	4.08	9.83	16.92	19.12	28.22	37.20	54.90	72.37	106.81	140.78	174.41	149.89	118.95	97.36	81.59	69.66	60.38	53.00	42.06	34.42	0.00				
20	2.21	4.29	10.35	17.81	20.13	29.71	39.16	57.79	76.18	112.43	148.19	183.59	161.88	128.46	105.15	88.12	75.24	65.21	57.23	45.42	0.00					
21	2.32	4.51	10.87	18.70	21.14	31.20	41.12	60.68	79.99	118.05	155.60	192.77	174.17	138.22	113.13	94.81	80.95	70.16	61.58	48.87	0.00					
22	2.43	4.72	11.38	19.59	22.14	32.68	43.08	63.57	83.80	123.67	163.01	201.95	186.76	148.21	121.30	101.66	86.80	75.24	66.03	52.40	0.00					
23	2.54	4.94	11.90	20.48	23.15	34.17	45.03	66.46	87.60	129.29	170.42	211.13	199.64	158.43	129.67	108.67	92.78	80.42	70.58	29.48	0.00					
24	2.65	5.15	12.42	21.37	24.16	35.65	46.99	69.35	91.41	134.91	177.83	220.31	212.80	168.87	138.22	115.83	98.90	85.72	75.24	0.00						
25	2.76	5.37	12.94	22.26	25.16	37.14	48.95	72.24	95.22	140.54	185.24	229.49	226.24	179.53	146.94	123.15	105.15	91.14	79.99	0.00						
26	2.87	5.58	13.45	23.15	26.17	38.62	50.91	75.13	99.03	146.16	192.65	238.67	239.95	190.41	155.85	130.61	111.52	96.66	84.83	0.00						
28	3.09	6.01	14.49	24.93	28.18	41.59	54.82	80.91	106.65	157.40	207.47	257.03	268.16	212.80	174.17	145.97	124.63	108.03	41.32	0.00						
30	3.31	6.44	15.52	26.71	30.20	44.56	58.74	86.69	114.27	168.64	222.28	275.39	297.40	236.00	193.16	161.88	138.22	91.27	0.00							
32	3.53	6.87	16.56	28.49	32.21	47.54	62.66	92.47	121.88	179.89	237.10	293.74	327.63	259.99	212.80	178.34	152.27	20.71	0.00							
35	3.86	7.51	18.11	31.16	35.23	51.99	68.53	101.14	133.31	196.75	259.33	321.28	374.76	297.40	243.41	203.99	66.13	0.00								
40	4.41	8.59	20.70	35.61	40.26	59.42	78.32	115.59	152.36	224.86	296.38	367.18	437.42	363.35	264.26	74.76	0.00									
45	4.97	9.66	23.28	40.06	45.29	66.85	88.11	130.04	171.40	252.96	333.43	413.08	492.09	352.89	132.45	0.00										
	Type I Manual or Drip Lubrication				Type II Bath or Disc Lubrication							Type III Oil Stream Lubrication														

NOTE: The limiting RPM for each lubrication type is shown in the chart's shaded areas directly above the type I, II or III reference. For optimum results, it is suggested that the roller chain manufacturer be given the opportunity to evaluate the operating condition of chains in the shaded (galling range) speed area. The horsepower ratings of multiple-strand chains are greater than those for single strand chain. See table 1 on page 8 for multiple-strand factors.

HEAVY SERIES 160H – 2.000 INCH PITCH

TABLE 24. HORSEPOWER RATINGS – SINGLE STRAND ROLLER CHAIN NO. 160H

No. of Teeth	Speed, min-1, Small Sprocket																									
	2	5	10	25	40	50	75	100	150	200	300	400	500	600	700	800	900	1000	1100	1200	1400	1600	1800	2000	2200	
11	0.73	1.75	3.40	8.19	12.86	15.94	23.52	31.00	45.75	60.31	89.00	117.32	96.58	73.47	58.31	47.72	39.99	34.15	29.60	25.98	20.61	16.87	14.14	12.07	0.00	
12	0.79	1.91	3.71	8.94	14.03	17.39	25.66	33.82	49.91	65.79	97.10	127.98	110.05	83.72	66.44	54.38	45.57	38.91	33.73	29.60	23.49	19.22	16.11	12.02	0.00	
13	0.86	2.07	4.02	9.68	15.20	18.83	27.80	36.64	54.07	71.27	105.19	138.65	124.09	94.40	74.91	61.31	51.38	43.87	38.03	33.37	26.48	21.68	18.17	0.00		
14	0.92	2.22	4.33	10.43	16.37	20.28	29.93	39.46	58.23	76.75	113.28	149.31	138.68	105.50	83.72	68.52	57.43	49.03	42.50	37.30	29.60	24.23	8.08	0.00		
15	0.99	2.38	4.64	11.17	17.54	21.73	32.07	42.27	62.39	82.24	121.37	159.98	153.80	117.00	92.85	75.99	63.69	54.38	47.13	41.37	32.83	26.87	0.00			
16	1.05	2.54	4.94	11.92	18.71	23.18	34.21	45.09	66.55	87.72	129.46	170.64	169.43	128.89	102.28	83.72	70.16	59.90	51.92	45.57	36.16	29.60	0.00			
17	1.12	2.70	5.25	12.66	19.88	24.63	36.35	47.91	70.71	93.20	137.55	181.31	185.56	141.16	112.02	91.69	76.84	65.61	56.87	49.91	39.61	0.00				
18	1.19	2.86	5.56	13.41	21.05	26.08	38.49	50.73	74.87	98.68	145.64	191.97	202.17	153.80	122.05	99.90	83.72	71.48	61.96	54.38	43.15	0.00				
19	1.25	3.02	5.87	14.15	22.22	27.53	40.63	53.55	79.03	104.17	153.74	202.64	219.25	166.79	132.36	108.33	90.79	77.52	67.19	58.97	43.82	0.00				
20	1.32	3.18	6.18	14.89	23.39	28.98	42.76	56.37	83.19	109.65	161.83	213.30	236.79	180.13	142.95	117.00	98.05	83.72	72.57	63.69	0.00					
21	1.38	3.34	6.49	15.64	24.56	30.42	44.90	59.18	87.35	115.13	169.92	223.97	254.77	193.81	153.80	125.88	105.50	90.07	78.08	68.52	0.00					
22	1.45	3.49	6.80	16.38	25.73	31.87	47.04	62.00	91.51	120.61	178.01	234.63	273.18	207.82	164.91	134.98	113.12	96.58	83.72	73.47	0.00					
23	1.52	3.65	7.11	17.13	26.90	33.32	49.18	64.82	95.67	126.10	186.10	245.30	292.02	222.15	176.29	144.29	120.92	103.24	89.49	68.24	0.00					
24	1.58	3.81	7.42	17.87	28.07	34.77	51.32	67.64	99.83	131.58	194.19	255.96	311.27	236.79	187.91	153.80	128.89	110.05	95.39	21.76	0.00					
25	1.65	3.97	7.73	18.62	29.23	36.22	53.45	70.46	103.99	137.06	202.28	266.63	330.32	251.74	199.77	163.51	137.03	117.00	101.41	0.00						
26	1.71	4.13	8.03	19.36	30.40	37.67	55.59	73.28	108.14	142.54	210.37	277.29	343.53	267.00	211.88	173.42	145.33	124.09	67.09	0.00						
28	1.85	4.45	8.65	20.85	32.74	40.57	59.87	78.91	116.46	153.51	226.56	298.62	369.96	298.39	236.79	193.81	162.42	135.17	0.00							
30	1.98	4.77	9.27	22.34	35.08	43.46	64.15	84.55	124.78	164.47	242.74	319.95	396.38	330.92	262.61	214.94	180.13	49.06	0.00							
32	2.11	5.08	9.89	23.83	37.42	46.36	68.42	90.18	133.10	175.44	258.92	341.28	422.81	364.56	289.30	236.79	157.70	0.00								
35	2.31	5.56	10.82	26.07	40.93	50.71	74.84	98.64	145.58	191.88	283.20	373.28	462.45	417.01	330.92	270.86	22.30	0.00								
40	2.64	6.35	12.36	29.79	46.78	57.95	85.53	112.73	166.38	219.30	323.65	426.60	528.51	509.49	345.15	57.42	0.00									
45	2.97	7.15	13.91	33.51	52.62	65.19	96.22	126.82	187.17	246.71	364.11	479.93	594.58	495.96	173.00	0.00										
	Type I Manual or Drip Lubrication					Type II Bath or Disc Lubrication						Type III Oil Stream Lubrication														

NOTE: The limiting RPM for each lubrication type is shown in the chart's shaded areas directly above the type I, II or III reference. For optimum results, it is suggested that the roller chain manufacturer be given the opportunity to evaluate the operating condition of chains in the shaded (galling range) speed area. The horsepower ratings of multiple-strand chains are greater than those for single strand chain. See table 1 on page 8 for multiple-strand factors.

HEAVY SERIES 180H – 2.250 INCH PITCH

TABLE 25. HORSEPOWER RATINGS – SINGLE STRAND ROLLER CHAIN NO. 180H

No. of Teeth	Speed, min-1, Small Sprocket																								
	2	5	10	25	37	50	75	100	150	200	300	400	500	600	700	800	900	1000	1100	1200	1400	1600	1800	2000
11	0.99	2.40	4.66	11.24	16.38	21.87	32.27	42.54	62.78	82.75	122.13	148.32	106.13	80.73	64.07	52.44	43.95	37.52	32.52	28.54	22.65	18.54	15.54	0.00
12	1.09	2.62	5.09	12.26	17.87	23.86	35.21	46.41	68.49	90.28	133.24	169.00	120.92	91.99	73.00	59.75	50.07	42.75	37.06	32.52	25.81	21.12	2.40	0.00
13	1.18	2.83	5.51	13.29	19.36	25.84	38.14	50.28	74.20	97.80	144.34	190.25	136.35	103.72	82.31	67.37	56.46	48.21	41.79	36.67	29.10	23.82	0.00	
14	1.27	3.05	5.94	14.31	20.85	27.83	41.08	54.14	79.91	105.32	155.44	204.89	152.38	115.92	91.99	75.29	63.10	53.87	46.70	40.98	32.52	10.23	0.00	
15	1.36	3.27	6.36	15.33	22.33	29.82	44.01	58.01	85.61	112.85	166.55	219.52	169.00	128.56	102.02	83.50	69.98	59.75	51.79	45.45	36.07	0.00		
16	1.45	3.49	6.78	16.35	23.82	31.81	46.94	61.88	91.32	120.37	177.65	234.16	186.17	141.63	112.39	91.99	77.09	65.82	57.05	50.07	39.74	0.00		
17	1.54	3.71	7.21	17.37	25.31	33.80	49.88	65.74	97.03	127.89	188.75	248.79	203.90	155.11	123.09	100.75	84.43	72.09	62.49	54.84	0.00			
18	1.63	3.92	7.63	18.40	26.80	35.78	52.81	69.61	102.74	135.42	199.86	263.43	222.15	169.00	134.11	109.77	91.99	78.54	68.08	59.75	0.00			
19	1.72	4.14	8.06	19.42	28.29	37.77	55.75	73.48	108.45	142.94	210.96	278.06	240.92	183.27	145.44	119.04	99.76	85.18	73.83	64.80	0.00			
20	1.81	4.36	8.48	20.44	29.78	39.76	58.68	77.35	114.15	150.46	222.06	292.70	260.19	197.93	157.07	128.56	107.74	91.99	79.74	55.31	0.00			
21	1.90	4.58	8.90	21.46	31.27	41.75	61.62	81.21	119.86	157.99	233.17	307.33	279.94	212.96	169.00	138.32	115.92	98.97	85.79	0.00				
22	1.99	4.80	9.33	22.48	32.76	43.74	64.55	85.08	125.57	165.51	244.27	321.97	300.17	228.35	181.21	148.32	124.30	106.13	87.35	0.00				
23	2.08	5.01	9.75	23.50	34.25	45.72	67.48	88.95	131.28	173.03	255.37	336.60	320.87	244.10	193.70	158.54	132.87	113.45	29.32	0.00				
24	2.17	5.23	10.18	24.53	35.74	47.71	70.42	92.82	136.98	180.56	266.48	351.24	342.02	260.19	206.47	169.00	141.63	120.92	0.00					
25	2.26	5.45	10.60	25.55	37.22	49.70	73.35	96.68	142.69	188.08	277.58	365.87	363.62	276.62	219.51	179.67	150.57	96.16	0.00					
26	2.35	5.67	11.03	26.57	38.71	51.69	76.29	100.55	148.40	195.60	288.68	380.51	385.66	293.38	232.81	190.55	159.69	37.53	0.00					
28	2.53	6.10	11.87	28.61	41.69	55.66	82.15	108.28	159.81	210.65	310.89	409.77	431.00	327.87	260.19	212.96	146.32	0.00						
30	2.71	6.54	12.72	30.66	44.67	59.64	88.02	116.02	171.23	225.69	333.09	439.04	477.99	363.62	288.56	236.18	30.96	0.00						
32	2.89	6.98	13.57	32.70	47.65	63.62	93.89	123.75	182.64	240.74	355.30	468.31	526.58	400.58	317.89	199.60	0.00							
35	3.17	7.63	14.84	35.77	52.11	69.58	102.69	135.36	199.77	263.31	388.61	512.22	602.34	458.22	363.62	28.22	0.00							
40	3.62	8.72	16.96	40.88	59.56	79.52	117.36	154.69	228.31	300.93	444.13	585.39	725.24	559.83	123.60	0.00								
45	4.07	9.81	19.08	45.99	67.00	89.46	132.03	174.03	256.84	338.54	499.64	658.57	750.00	333.00	0.00									
	Type I Manual or Drip Lubrication					Type II Bath or Disc Lubrication						Type III Oil Stream Lubrication												

NOTE: The limiting RPM for each lubrication type is shown in the chart's shaded areas directly above the type I, II or III reference. For optimum results, it is suggested that the roller chain manufacturer be given the opportunity to evaluate the operating condition of chains in the shaded (galling range) speed area. The horsepower ratings of multiple-strand chains are greater than those for single strand chain. See table 1 on page 8 for multiple-strand factors.

HEAVY SERIES 200H – 2.500 INCH PITCH

TABLE 26. HORSEPOWER RATINGS – SINGLE STRAND ROLLER CHAIN NO. 200H

No. of Teeth	Speed, min-1, Small Sprocket																												
	2	5	10	25	33	50	75	100	150	200	250	300	350	400	450	500	600	700	800	900	1000	1100	1200	1300	1400	1500	1600	1700	1800
11	1.37	3.31	6.44	15.51	20.25	30.17	44.53	58.70	86.63	114.18	141.46	168.52	195.40	161.36	135.23	115.46	87.83	69.70	57.05	47.81	40.82	35.38	31.05	27.54	24.64	22.22	20.17	18.42	0.00
12	1.50	3.61	7.02	16.92	22.09	32.92	48.58	64.03	94.51	124.57	154.32	183.84	213.16	183.86	154.08	131.56	100.08	79.42	65.00	54.48	46.51	40.32	35.38	31.38	28.08	25.32	18.78	0.00	
13	1.62	3.91	7.61	18.33	23.93	35.66	52.63	69.37	102.38	134.95	167.18	199.16	230.93	207.31	173.74	148.34	112.85	89.55	73.30	61.43	52.45	45.46	39.90	35.38	31.66	28.55	0.00		
14	1.75	4.21	8.19	19.74	25.77	38.40	56.68	74.71	110.26	145.33	180.04	214.48	248.69	231.69	194.17	165.78	126.11	100.08	81.91	68.65	58.61	50.80	44.59	39.54	35.38	0.00			
15	1.87	4.51	8.78	21.15	27.61	41.15	60.73	80.04	118.13	155.71	192.90	229.80	266.46	256.95	215.34	183.86	139.87	110.99	90.85	76.13	65.00	56.34	49.45	43.86	0.00				
16	2.00	4.81	9.36	22.56	29.45	43.89	64.77	85.38	126.01	166.09	205.76	245.12	284.22	283.07	237.23	202.55	154.08	122.27	100.08	83.87	71.61	62.07	54.48	22.17	0.00				
17	2.12	5.11	9.95	23.97	31.29	46.63	68.82	90.71	133.88	176.47	218.62	260.44	301.98	310.02	259.81	221.83	168.75	133.91	109.61	91.86	78.43	67.98	59.66	0.00					
18	2.25	5.41	10.53	25.38	33.13	49.38	72.87	96.05	141.76	186.85	231.48	275.76	319.75	337.77	283.07	241.69	183.86	145.90	119.42	100.08	85.45	74.07	11.75	0.00					
19	2.37	5.71	11.12	26.79	34.97	52.12	76.92	101.39	149.63	197.23	244.35	291.08	337.51	366.30	306.98	262.11	199.39	158.23	129.51	108.53	92.67	80.32	0.00						
20	2.50	6.02	11.70	28.20	36.82	54.86	80.97	106.72	157.51	207.61	257.21	306.40	355.27	395.60	331.53	283.07	215.34	170.88	139.87	117.21	100.08	31.07	0.00						
21	2.62	6.32	12.29	29.61	38.66	57.60	85.02	112.06	165.38	217.99	270.07	321.72	373.04	425.64	356.71	304.56	231.69	183.86	150.49	126.11	107.68	0.00							
22	2.75	6.62	12.87	31.02	40.50	60.35	89.07	117.40	173.26	228.37	282.93	337.04	390.80	456.40	382.49	326.57	248.43	197.15	161.36	135.23	86.70	0.00							
23	2.87	6.92	13.46	32.43	42.34	63.09	93.11	122.73	181.14	238.75	295.79	352.36	408.56	464.44	408.86	349.09	265.56	210.74	172.49	144.55	11.76	0.00							
24	3.00	7.22	14.04	33.84	44.18	65.83	97.16	128.07	189.01	249.13	308.65	367.68	426.33	484.64	435.81	372.10	283.07	224.63	183.86	154.08	0.00								
25	3.12	7.52	14.63	35.25	46.02	68.58	101.21	133.40	196.89	259.51	321.51	383.00	444.09	504.83	463.33	395.60	300.94	238.82	195.47	118.72	0.00								
26	3.24	7.82	15.21	36.66	47.86	71.32	105.26	138.74	204.76	269.89	334.37	398.32	461.86	525.02	491.41	419.57	319.18	253.29	207.31	46.33	0.00								
	Type I Manual or Drip Lubrication					Type II Bath or Disc Lubrication							Type III Oil Stream Lubrication																

NOTE: The limiting RPM for each lubrication type is shown in the chart's shaded areas directly above the type I, II or III reference. For optimum results, it is suggested that the roller chain manufacturer be given the opportunity to evaluate the operating condition of chains in the shaded (galling range) speed area. The horsepower ratings of multiple-strand chains are greater than those for single strand chain. See table 1 on page 8 for multiple-strand factors.

HEAVY SERIES 240H – 3.000 INCH PITCH

TABLE 27. HORSEPOWER RATINGS – SINGLE STRAND ROLLER CHAIN NO. 240H

No. of Teeth	Speed, min-1, Small Sprocket																										
	2	5	10	25	27	50	75	100	150	200	250	300	350	400	450	500	600	700	800	900	1000	1100	1200	1300	1400	1500
11	2.33	5.62	10.93	26.33	28.35	51.23	75.60	99.65	147.07	193.85	240.16	286.10	228.10	186.70	156.46	133.59	101.63	80.65	66.01	55.32	47.23	40.94	35.93	31.87	28.51	0.00
12	2.54	6.13	11.92	28.73	30.93	55.88	82.48	108.71	160.44	211.48	262.00	312.11	259.91	212.73	178.28	152.22	115.80	91.89	75.21	63.03	53.82	46.65	40.94	36.31	0.00	
13	2.75	6.64	12.91	31.12	33.51	60.54	89.35	117.77	173.81	229.10	283.83	338.12	293.06	239.87	201.02	171.64	130.57	103.61	84.81	71.07	60.68	52.60	46.16	0.00		
14	2.97	7.15	13.91	33.52	36.09	65.20	96.22	126.83	187.18	246.72	305.66	364.13	327.52	268.07	224.66	191.82	145.92	115.80	94.78	79.43	67.82	58.78	18.18	0.00		
15	3.18	7.66	14.90	35.91	38.66	69.85	103.10	135.89	200.55	264.35	327.50	390.14	363.23	297.30	249.15	212.73	161.83	128.42	105.11	88.09	75.21	65.19	0.00			
16	3.39	8.17	15.89	38.30	41.24	74.51	109.97	144.95	213.92	281.97	349.33	416.15	400.15	327.52	274.48	234.35	178.28	141.47	115.80	97.04	82.86	0.00				
17	3.60	8.68	16.89	40.70	43.82	79.17	116.84	154.01	227.29	299.59	371.16	442.16	438.25	358.70	300.61	256.66	195.25	154.94	126.82	106.28	90.74	0.00				
18	3.81	9.19	17.88	43.09	46.40	83.83	123.72	163.07	240.66	317.21	392.99	468.17	477.48	390.81	327.52	279.64	212.73	168.81	138.17	115.80	16.92	0.00				
19	4.03	9.70	18.87	45.48	48.97	88.48	130.59	172.13	254.03	334.84	414.83	494.18	517.81	423.82	355.19	303.26	230.70	183.08	149.84	125.58	0.00					
20	4.24	10.21	19.87	47.88	51.55	93.14	137.46	181.18	267.40	352.46	436.66	520.19	559.23	457.72	383.59	327.52	249.15	197.72	161.83	98.33	0.00					
21	4.45	10.72	20.86	50.27	54.13	97.80	144.33	190.24	280.78	370.08	458.49	546.19	601.69	492.48	412.72	352.39	268.07	212.73	174.12	0.00						
22	4.66	11.23	21.85	52.67	56.71	102.45	151.21	199.30	294.15	387.71	480.33	572.20	645.18	528.07	442.55	377.85	287.44	228.10	186.70	0.00						
23	4.87	11.74	22.85	55.06	59.28	107.11	158.08	208.36	307.52	405.33	502.16	598.21	689.66	564.48	473.06	403.91	307.26	243.83	153.53	0.00						
24	5.09	12.26	23.84	57.45	61.86	111.77	164.95	217.42	320.89	422.95	523.99	624.22	723.78	601.69	504.25	430.53	327.52	259.91	48.97	0.00						
25	5.30	12.77	24.83	59.85	64.44	116.42	171.83	226.48	334.26	440.58	545.83	650.23	753.94	639.68	536.09	457.72	348.20	276.32	0.00							
26	5.51	13.28	25.83	62.24	67.02	121.08	178.70	235.54	347.63	458.20	567.66	676.24	784.10	678.45	568.57	485.46	369.30	293.06	0.00							
	Type I Manual or Drip Lubrication				Type II Bath or Disc Lubrication							Type III Oil Stream Lubrication														

NOTE: The limiting RPM for each lubrication type is shown in the chart's shaded areas directly above the type I, II or III reference. For optimum results, it is suggested that the roller chain manufacturer be given the opportunity to evaluate the operating condition of chains in the shaded (galling range) speed area. The horsepower ratings of multiple-strand chains are greater than those for single strand chain. See table 1 on page 8 for multiple-strand factors.

SPROCKET DATA – INCH

TABLE 28. SPROCKET DATA – INCH

No. of Teeth	35 0.375″ Pitch		40, 41 0.50″ Pitch		50 0.625″ Pitch		60 0.75″ Pitch		80 1.0″ Pitch		100 1.25″ Pitch		120 1.5″ Pitch		140 1.75″ Pitch		160 2.0″ Pitch		180 2.25″ Pitch		200 2.5″ Pitch		240 3.0″ Pitch	
	Pitch Dia.	O.D.	Pitch Dia.	O.D.	Pitch Dia.	O.D.	Pitch Dia.	O.D.	Pitch Dia.	O.D.	Pitch Dia.	O.D.	Pitch Dia.	O.D.	Pitch Dia.	O.D.	Pitch Dia.	O.D.	Pitch Dia.	O.D.	Pitch Dia.	O.D.	Pitch Dia.	O.D.
9	1.096	1.256	1.462	1.674	1.827	2.092	2.193	2.511	2.924	3.347	6.355	4.184	4.396	5.021	5.117	5.858	5.848	6.695	–	–	7.310	8.367	8.771	10.044
10	1.214	1.380	1.618	1.839	2.023	2.299	2.427	2.758	3.236	3.678	4.045	4.597	4.854	5.516	5.663	6.436	6.472	7.355	–	–	8.090	9.195	9.708	11.034
11	1.331	1.502	1.775	2.003	2.219	2.504	2.662	3.004	3.549	4.006	4.437	5.007	5.324	6.008	6.212	7.010	7.099	8.011	7.986	9.010	8.872	10.015	10.649	12.018
12	1.449	1.625	1.932	2.166	2.415	2.708	2.898	3.249	3.864	4.332	4.830	5.415	5.796	6.498	6.762	7.581	7.727	8.664	8.693	9.750	9.660	10.830	11.591	12.996
13	1.567	1.747	2.089	2.329	2.612	2.911	3.134	3.493	4.179	4.657	5.223	5.821	6.268	6.986	7.313	8.150	8.357	9.314	9.402	10.480	10.447	11.642	12.536	13.971
14	1.685	1.868	2.247	2.491	2.809	3.113	3.371	3.736	4.494	4.982	5.617	6.227	6.741	7.472	7.864	8.718	8.988	9.963	10.111	11.210	11.235	12.455	13.482	14.943
15	1.804	1.990	2.405	2.652	3.006	3.315	3.607	3.979	4.810	5.305	6.012	6.631	7.215	7.957	8.417	9.283	9.620	10.609	10.822	11.940	12.025	13.262	14.429	15.912
16	1.922	2.111	2.563	2.814	3.204	3.517	3.844	4.221	5.126	5.627	6.407	7.034	7.689	8.441	8.970	9.848	10.252	11.255	11.533	12.660	12.815	14.067	15.377	16.881
17	2.041	2.231	2.721	2.975	3.401	3.719	4.082	4.462	5.442	5.950	6.803	7.437	8.163	8.924	9.524	10.411	10.885	11.899	12.245	13.390	13.605	14.872	16.327	17.847
18	2.159	2.352	2.879	3.135	3.599	3.920	4.319	4.704	5.759	6.271	7.198	7.839	8.638	9.407	10.078	10.975	11.518	12.543	12.957	14.110	14.397	15.677	17.276	18.813
19	2.278	2.473	3.038	3.296	3.797	4.120	4.557	4.945	6.076	6.593	7.594	8.241	9.113	9.889	10.632	11.537	12.151	13.185	13.670	14.830	15.190	16.482	18.227	19.779
20	2.397	2.593	3.196	3.457	3.995	4.321	4.794	5.185	6.392	6.914	7.991	8.642	9.589	10.370	11.187	12.099	12.785	13.828	14.383	15.560	15.982	17.285	19.177	20.742
21	2.516	2.713	3.355	3.617	4.193	4.522	5.032	5.426	6.710	7.235	8.387	9.043	10.064	10.851	11.742	12.660	13.419	14.470	15.096	16.280	16.775	18.087	20.129	21.705
22	2.635	2.833	3.513	3.778	4.392	4.722	5.270	5.666	7.027	7.555	8.783	9.444	10.540	11.332	12.297	13.221	14.053	15.110	15.810	17.000	17.567	18.887	21.080	22.665
23	2.754	2.954	3.672	3.938	4.590	4.922	5.508	5.907	7.344	7.875	9.180	9.844	11.016	11.813	12.852	13.782	14.688	15.751	16.524	17.720	18.360	19.687	22.032	23.628
24	2.873	3.074	3.831	4.098	4.788	5.122	5.746	6.147	7.661	8.196	9.577	10.245	11.492	12.294	13.407	14.343	15.323	16.392	17.238	18.440	19.152	20.490	22.984	24.588
25	2.992	3.194	3.989	4.258	4.987	5.322	5.984	6.387	7.979	8.516	9.973	10.645	11.968	12.774	13.963	14.903	15.958	17.032	17.952	19.160	19.947	21.290	23.936	25.548
26	3.111	3.314	4.148	4.418	5.185	5.522	6.222	6.627	8.296	8.836	10.370	11.045	12.444	13.254	14.518	15.463	16.593	17.671	–	–	20.740	22.090	24.889	26.508
27	3.230	3.434	4.307	4.578	5.384	5.722	6.460	6.867	8.614	9.156	10.767	11.444	12.921	13.733	15.074	16.022	17.228	18.311	–	–	21.535	22.890	25.841	27.468
28	3.349	3.554	4.466	4.738	5.582	5.922	6.699	7.107	8.931	9.475	11.164	11.844	13.397	14.213	15.630	16.582	17.863	18.951	20.096	21.320	22.330	23.687	26.794	28.425
29	3.468	3.673	4.625	4.897	5.781	6.122	6.937	7.346	9.249	9.795	11.561	12.244	13.874	14.692	16.186	17.141	18.498	19.590	–	–	23.122	24.487	27.747	29.385
30	3.588	3.793	4.783	5.057	5.979	6.321	7.175	7.586	9.567	10.114	11.958	12.643	14.350	15.172	16.742	17.700	19.134	20.229	21.525	22.760	23.917	25.285	28.700	30.342
31	3.707	3.913	4.942	5.217	6.178	6.521	7.413	7.825	9.885	10.434	12.356	13.043	14.827	15.651	17.298	18.259	19.769	20.868	–	–	24.712	26.085	29.654	31.302
32	3.826	4.033	5.101	5.377	6.376	6.721	7.652	8.065	10.202	10.753	12.753	13.442	15.303	16.130	17.854	18.818	20.405	21.506	–	–	25.505	26.882	30.607	32.259
33	3.945	4.152	5.260	5.536	6.575	6.920	7.890	8.304	10.520	11.072	13.150	13.841	15.780	16.609	18.410	19.377	21.040	22.145	–	–	26.300	27.680	31.560	33.219
34	4.064	4.272	5.419	5.696	6.774	7.120	8.128	8.544	10.838	11.392	13.547	14.240	16.257	17.088	18.966	19.936	21.676	22.784	–	–	27.095	28.480	32.514	34.176
35	4.183	4.392	5.578	5.855	6.972	7.319	8.367	8.783	11.156	11.711	13.945	14.639	16.734	17.566	19.523	20.494	22.312	23.422	25.101	26.350	27.890	29.277	33.467	35.133
36	4.303	4.511	5.737	6.015	7.171	7.519	8.605	9.022	11.474	12.030	14.342	15.038	17.211	18.045	20.079	21.052	22.947	24.060	–	–	28.685	30.075	34.421	36.090
37	4.422	4.631	5.896	6.175	7.370	7.718	8.844	9.262	11.792	12.349	14.740	15.437	17.687	18.524	20.635	21.611	23.583	24.698	–	–	29.480	30.872	35.375	37.047
38	4.541	4.751	6.055	6.334	7.568	7.918	9.082	9.501	12.110	12.668	15.137	15.835	18.164	19.002	21.192	22.169	24.219	25.336	–	–	30.275	31.670	36.329	38.004
39	4.660	4.871	6.214	6.494	7.767	8.117	9.321	9.740	12.428	12.987	15.534	16.234	18.641	19.481	21.748	22.728	24.855	25.975	–	–	31.070	32.467	37.283	38.961
40	4.780	4.990	6.373	6.653	7.966	8.316	9.559	9.980	12.745	13.306	15.932	16.633	19.118	19.959	22.305	23.286	25.491	26.613	28.677	29.940	31.865	33.265	38.237	39.918
41	4.899	5.110	6.532	6.813	8.165	8.516	9.798	10.219	13.063	13.625	16.329	17.032	19.595	20.438	22.861	23.844	26.127	27.251	–	–	32.660	34.062	39.191	40.875
42	5.018	5.229	6.691	6.972	8.363	8.715	10.036	10.458	13.381	13.944	16.727	17.430	20.072	20.916	23.418	23.402	26.763	27.888	–	–	33.455	34.860	40.145	41.832
43	5.137	5.349	6.850	7.131	8.562	8.914	10.275	10.697	13.700	14.263	17.124	17.829	20.549	21.394	23.974	24.960	27.399	28.526	–	–	34.250	35.657	41.099	42.789
44	5.257	5.468	7.009	7.291	8.761	9.114	10.513	10.936	14.018	14.582	17.522	18.227	21.026	21.873	24.531	25.518	28.035	29.164	–	–	35.045	36.455	42.053	43.746
45	5.376	5.588	7.168	7.451	8.960	9.313	10.752	11.176	14.336	14.901	17.919	18.626	21.503	22.351	25.087	26.076	28.671	29.802	32.255	33.530	35.840	37.252	43.007	44.703
46	5.495	5.708	7.327	7.609	9.159	9.512	10.990	11.415	14.654	15.219	18.317	19.024	21.980	22.829	25.644	26.634	29.307	30.439	–	–	36.635	38.047	43.961	45.657
47	5.614	5.827	7.486	7.769	9.357	9.711	11.229	11.654	14.972	15.538	18.715	19.423	22.458	23.308	26.201	27.192	29.943	31.077	–	–	37.430	38.845	44.915	46.614
48	5.734	5.947	7.645	7.928	9.556	9.911	11.467	11.893	15.290	15.857	19.112	19.821	22.935	23.786	26.757	27.750	30.580	31.714	–	–	38.225	39.642	45.869	47.571
49	5.853	6.066	7.804	8.088	9.755	10.111	11.706	12.132	15.608	16.176	19.510	20.219	23.412	24.264	27.314	28.308	31.216	32.352	–	–	39.020	40.440	46.824	48.528
50	5.972	6.186	7.963	8.247	9.954	10.309	11.944	12.371	15.928	16.495	19.908	20.618	23.889	24.742	27.871	28.865	31.852	32.989	–	–	39.815	41.237	47.778	49.485
51	6.091	6.305	8.122	8.407	10.153	10.508	12.183	12.610	16.244	16.813	20.305	21.017	24.366	25.220	28.427	29.423	32.488	33.626	–	–	40.610	42.032	48.732	50.439
52	6.211	6.425	8.281	8.566	10.351	10.707	12.422	12.849	16.562	17.132	20.703	21.415	24.843	25.698	28.984	29.980	33.124	34.263	–	–	41.405	42.830	49.687	51.396
53	6.330	6.544	8.440	8.725	10.550	10.907	12.660	13.088	16.880	17.451	21.100	21.813	25.320	26.176	29.541	30.538	33.761	34.901	–	–	42.200	43.627	50.641	52.353

Continued on next page.

Continued from previous page.

No. of Teeth	35 0.375″ Pitch		40, 41 0.50″ Pitch		50 0.625″ Pitch		60 0.75″ Pitch		80 1.0″ Pitch		100 1.25″ Pitch		120 1.5″ Pitch		140 1.75″ Pitch		160 2.0″ Pitch		180 2.25″ Pitch		200 2.5″ Pitch		240 3.0″ Pitch	
	Pitch Dia.	O.D.	Pitch Dia.	O.D.	Pitch Dia.	O.D.	Pitch Dia.	O.D.	Pitch Dia.	O.D.	Pitch Dia.	O.D.	Pitch Dia.	O.D.	Pitch Dia.	O.D.	Pitch Dia.	O.D.	Pitch Dia.	O.D.	Pitch Dia.	O.D.	Pitch Dia.	O.D.
54	6.449	6.664	8.599	8.885	10.749	11.106	12.899	13.327	17.198	17.769	21.498	22.212	25.798	26.654	30.097	31.096	34.397	35.539	38.696	39.980	42.996	44.422	51.595	53.307
55	6.569	6.783	8.758	9.044	10.948	11.305	13.137	13.566	17.517	18.088	21.896	22.610	26.275	27.132	30.654	31.654	35.033	36.176	–	–	43.792	45.220	52.550	54.264
56	6.688	6.903	8.917	9.203	11.147	11.504	13.376	13.805	17.835	18.406	22.293	23.008	26.752	27.610	31.211	32.211	35.669	36.813	–	–	44.587	46.015	53.504	55.221
57	6.807	7.022	9.076	9.363	11.346	11.703	13.615	14.044	18.153	18.725	22.691	23.407	27.229	28.088	31.768	32.769	36.306	37.451	–	–	45.382	46.812	54.458	56.175
58	6.927	7.142	9.236	9.522	11.544	11.902	13.853	14.283	18.471	19.044	23.089	23.805	27.707	28.566	32.324	33.327	36.942	38.088	–	–	46.177	47.610	55.413	57.132
59	7.046	7.261	9.395	9.681	11.743	12.102	14.092	14.522	18.739	19.363	23.486	24.203	28.184	29.044	32.881	33.885	37.578	38.725	–	–	46.972	48.407	56.368	58.089
60	7.165	7.381	9.554	9.841	11.942	12.301	14.330	14.761	19.107	19.681	23.884	24.601	28.661	29.522	33.438	34.442	38.215	39.362	42.922	44.280	47.767	49.202	57.322	59.043
61	7.284	7.500	9.713	10.000	12.141	12.500	14.569	15.000	19.426	20.000	24.282	25.000	29.138	30.000	33.995	35.000	38.851	39.999	–	–	48.565	50.000	58.277	60.000
62	7.404	7.619	9.872	10.159	12.340	12.699	14.808	15.238	19.744	20.318	24.680	25.397	29.616	30.477	34.551	35.557	39.487	40.636	–	–	49.360	50.795	59.231	60.954
63	7.523	7.739	10.031	10.318	12.539	12.898	15.046	15.477	20.062	20.637	25.077	25.796	30.093	30.955	35.108	36.114	40.124	41.274	–	–	50.155	51.592	60.185	61.911
64	7.642	7.858	10.190	10.478	12.738	13.097	15.285	15.716	20.380	20.955	25.475	26.194	30.570	31.433	35.665	36.672	40.760	41.911	–	–	50.950	52.387	61.140	62.868
65	7.762	7.978	10.349	10.637	12.936	13.096	15.524	15.955	20.698	21.274	25.873	26.593	31.047	31.911	36.222	37.229	41.396	42.548	–	–	51.745	53.185	62.095	63.822
66	7.881	8.097	10.508	10.796	13.135	13.495	15.762	16.194	21.016	21.593	26.271	26.991	31.525	32.389	36.779	37.787	42.033	43.185	–	–	52.540	53.982	63.049	64.779
67	8.000	8.217	10.667	10.956	13.334	13.694	16.001	16.433	21.335	21.911	26.668	27.389	32.002	32.867	37.336	38.345	42.669	43.822	–	–	53.337	54.777	64.004	65.733
68	8.120	8.336	10.826	11.115	13.533	13.893	16.240	16.672	21.653	22.230	27.066	27.787	32.479	33.345	37.892	38.902	43.306	44.459	–	–	54.132	55.575	64.958	66.690
69	8.239	8.456	10.986	11.274	13.732	14.092	16.478	16.911	21.971	22.548	27.464	28.185	32.957	33.822	38.449	39.459	43.942	45.096	–	–	54.927	56.370	65.913	67.644
70	8.358	8.575	11.145	11.434	13.931	14.292	16.717	17.105	22.289	22.867	27.862	28.584	33.434	34.301	39.006	40.017	44.578	45.734	–	–	55.722	57.167	66.868	68.601
71	8.478	8.694	11.304	11.593	14.130	14.491	16.956	17.388	22.607	23.185	28.259	28.981	33.911	34.778	39.563	40.574	45.215	46.370	–	–	56.517	57.962	67.822	69.555
72	8.597	8.814	11.463	11.752	14.328	14.690	17.194	17.628	22.926	23.504	28.657	29.380	34.388	35.256	40.120	41.132	45.851	47.008	–	–	57.315	58.760	68.777	70.512
73	8.716	8.933	11.622	11.911	14.527	14.889	17.433	17.866	23.244	23.822	29.055	29.778	34.866	35.733	40.677	41.689	46.488	47.644	–	–	58.110	59.555	69.731	71.466
74	8.836	9.053	11.781	12.071	14.726	15.088	17.672	18.105	23.562	24.141	29.453	30.176	35.343	36.212	41.234	42.247	47.124	48.282	–	–	58.905	60.352	70.686	72.423
75	8.995	9.172	11.940	12.229	14.925	15.287	17.910	18.344	23.880	24.459	29.850	30.574	35.820	36.689	41.790	42.803	47.760	48.918	–	–	59.700	61.147	71.641	73.377
76	9.074	9.292	12.099	12.389	15.124	15.486	18.149	18.583	24.198	24.778	30.248	30.973	36.298	37.167	42.347	43.362	48.397	49.556	–	–	60.495	61.945	72.595	74.334
77	9.194	9.411	12.258	12.548	15.323	15.685	18.387	18.822	24.517	25.096	30.646	31.370	36.775	37.644	42.904	43.918	49.033	50.192	–	–	61.292	62.741	73.550	75.288
78	9.313	9.531	12.417	12.708	15.522	15.884	18.626	19.061	24.835	25.415	31.044	31.769	37.252	38.123	43.461	44.476	49.670	50.830	–	–	62.087	63.537	74.505	76.245
79	9.432	9.650	12.577	12.867	15.721	16.083	18.865	19.299	25.153	25.733	31.441	32.166	37.730	38.600	44.018	45.033	50.306	51.466	–	–	62.882	64.332	75.459	77.199
80	9.552	9.770	12.736	13.026	15.920	16.282	19.104	19.539	25.471	26.052	31.839	32.565	38.207	39.078	44.575	45.591	50.943	52.104	–	–	63.677	65.130	76.414	78.156
81	9.671	9.889	12.895	13.185	16.118	16.481	19.342	19.777	25.790	26.370	32.237	32.963	38.684	39.555	45.132	46.148	51.579	52.740	–	–	64.475	65.925	77.369	79.110
82	9.790	10.008	13.054	13.345	16.317	16.681	19.581	20.016	26.108	26.689	32.635	33.361	39.162	40.034	45.689	46.706	52.216	53.378	–	–	65.270	66.722	78.323	80.067
83	9.190	10.128	13.213	13.504	16.516	16.879	19.820	20.255	26.426	27.007	33.033	33.759	39.639	40.511	46.246	47.262	52.852	54.014	–	–	66.065	67.517	79.278	81.021
84	10.029	10.247	13.372	13.663	16.715	17.079	20.058	20.494	26.744	27.326	33.430	34.158	40.116	40.989	46.803	47.821	53.489	54.652	–	–	66.860	68.315	80.233	81.978
85	10.148	10.367	13.531	13.822	16.914	17.277	20.297	20.733	27.063	27.644	33.828	34.555	40.594	41.466	47.359	48.377	54.125	55.288	–	–	67.657	69.110	81.188	82.932
86	10.268	10.486	13.690	13.981	17.113	17.476	20.536	20.791	27.381	27.962	34.226	34.953	41.071	41.943	47.916	48.934	54.761	55.924	–	–	68.452	69.905	82.142	83.886
87	10.387	10.605	13.849	14.141	17.312	17.676	20.774	21.210	27.699	28.281	34.624	35.351	41.548	42.422	48.473	49.492	55.398	55.562	–	–	69.247	70.702	83.097	84.843
88	10.506	10.725	14.009	14.299	17.511	17.874	21.013	21.449	28.017	28.599	35.022	35.749	42.026	42.899	49.030	50.048	56.034	57.198	–	–	70.042	71.497	84.052	85.797
89	10.626	10.844	14.168	14.459	17.710	18.074	21.252	21.688	28.335	28.918	35.419	36.148	42.503	43.377	49.587	50.607	56.671	57.836	–	–	70.837	72.295	85.006	86.754
90	10.745	10.964	14.327	14.618	17.909	18.272	21.490	21.927	28.654	29.236	35.817	36.545	42.981	43.854	50.144	51.163	57.307	58.472	–	–	71.635	73.090	85.961	87.708
91	10.864	11.083	14.486	14.777	18.107	18.471	21.729	22.165	28.972	29.554	36.215	36.943	43.458	44.331	50.701	51.720	57.944	59.108	–	–	72.430	73.885	86.916	88.665
92	10.984	11.202	14.645	14.937	18.306	18.671	21.968	22.404	29.290	29.873	36.613	37.341	43.935	44.810	51.258	52.278	58.580	59.746	–	–	73.225	74.682	87.871	89.619
93	11.103	11.322	14.804	15.096	18.505	18.869	22.206	22.643	29.608	30.191	37.011	37.739	44.413	45.287	51.814	52.834	59.216	60.382	–	–	74.020	75.477	88.825	90.576
94	11.223	11.441	14.963	15.255	18.704	19.069	22.445	22.882	29.927	30.510	37.408	38.138	44.890	45.765	52.371	53.393	59.853	61.020	–	–	74.815	76.275	89.780	91.530
95	11.342	11.561	15.122	15.414	18.903	19.267	22.684	23.121	30.245	30.828	37.806	38.535	45.367	46.242	52.928	53.949	60.489	61.656	–	–	75.612	77.070	90.735	92.484
96	11.461	11.680	15.282	15.573	19.102	19.466	22.922	23.359	30.563	31.146	38.204	38.933	45.845	46.719	53.485	54.506	61.126	62.292	–	–	76.407	77.865	91.960	93.441
97	11.581	11.799	15.441	15.733	19.301	19.666	23.161	23.598	30.881	31.465	38.602	39.331	46.322	47.198	54.042	55.064	61.762	62.930	–	–	77.202	78.662	92.645	94.395
98	11.700	11.919	15.600	15.892	19.500	19.864	23.400	23.837	31.200	31.783	39.000	39.729	46.800	47.675	54.499	55.620	62.399	63.566	–	–	77.997	79.457	93.599	95.352

Continued on next page.

Continued from previous page.

No. of Teeth	35 0.375″ Pitch		40, 41 0.50″ Pitch		50 0.625″ Pitch		60 0.75″ Pitch		80 1.0″ Pitch		100 1.25″ Pitch		120 1.5″ Pitch		140 1.75″ Pitch		160 2.0″ Pitch		180 2.25″ Pitch		200 2.5″ Pitch		240 3.0″ Pitch	
	Pitch Dia.	O.D.	Pitch Dia.	O.D.	Pitch Dia.	O.D.	Pitch Dia.	O.D.	Pitch Dia.	O.D.	Pitch Dia.	O.D.	Pitch Dia.	O.D.	Pitch Dia.	O.D.	Pitch Dia.	O.D.	Pitch Dia.	O.D.	Pitch Dia.	O.D.	Pitch Dia.	O.D.
99	11.819	12.038	15.759	16.051	19.699	20.064	23.638	24.076	31.518	32.102	39.397	40.128	47.277	48.153	55.156	56.179	63.035	64.204	–	–	78.795	80.255	94.554	96.306
100	11.939	12.158	15.918	16.210	19.898	20.262	23.877	24.315	31.836	32.420	39.795	40.525	47.754	48.630	55.713	56.735	63.672	64.840	–	–	79.590	81.050	95.509	97.263
101	12.058	12.277	16.077	16.370	20.097	20.462	24.116	24.554	32.154	32.739	40.193	40.924	48.232	49.109	56.270	57.294	64.309	65.478	–	–	80.385	81.847	96.464	98.217
102	12.177	12.396	16.236	16.529	20.295	20.661	24.355	24.793	32.473	33.058	40.591	41.322	48.709	49.586	56.827	57.851	64.945	66.115	–	–	81.182	82.642	97.418	99.171
103	12.297	12.516	16.395	16.688	20.494	20.860	24.593	25.032	32.791	33.376	40.989	41.720	49.187	50.064	57.384	58.408	65.582	66.752	–	–	81.977	83.440	98.373	100.128
104	12.416	12.635	16.555	16.847	20.693	21.059	24.832	25.271	33.109	33.695	41.387	42.118	49.664	50.542	57.941	58.966	66.218	67.389	–	–	82.772	84.235	99.328	101.082
105	12.535	12.755	16.714	17.006	20.892	21.258	25.071	25.510	33.428	34.013	41.784	42.517	50.141	51.020	58.498	59.523	66.855	68.027	–	–	83.567	85.030	100.283	102.039
106	12.655	12.874	16.873	17.166	21.091	21.457	25.309	25.749	33.746	34.332	42.182	42.915	50.619	51.498	59.055	60.081	67.492	68.664	–	–	84.365	85.827	101.238	102.993
107	12.774	12.994	17.032	17.325	21.290	21.656	25.548	25.987	34.064	34.650	42.580	43.312	51.096	51.975	59.612	60.637	68.128	69.299	–	–	85.160	86.622	102.192	103.947
108	12.893	13.113	17.191	17.484	21.489	21.854	25.787	26.226	34.382	34.968	42.978	43.710	51.574	52.452	60.169	61.194	68.765	69.936	–	–	85.955	87.420	103.147	104.904
109	13.013	13.232	17.350	17.643	21.688	22.054	26.025	26.465	34.701	35.287	43.376	44.108	52.051	52.930	60.726	61.751	69.401	70.573	–	–	86.752	88.215	104.102	105.858
110	13.132	13.352	17.509	17.803	21.887	22.253	26.264	26.704	35.019	35.605	43.774	44.506	52.528	53.408	61.283	62.309	70.038	71.210	–	–	87.547	89.012	105.056	106.815
111	13.251	13.471	17.669	17.962	22.086	22.452	26.503	26.943	35.337	35.924	44.171	44.905	53.006	53.886	61.840	62.867	70.674	71.848	–	–	88.342	89.807	106.011	107.769
112	13.371	13.591	17.828	18.122	22.285	22.651	26.742	27.182	35.655	36.243	44.569	45.304	53.483	54.364	62.397	63.425	71.311	72.486	–	–	89.137	90.602	106.967	108.723
113	13.490	13.710	17.987	18.280	22.484	22.850	26.980	27.421	35.974	36.561	44.967	45.701	53.960	54.841	62.954	63.982	71.948	73.122	–	–	89.935	91.400	107.921	109.680
114	13.609	13.830	18.146	18.440	22.682	23.049	27.219	27.660	36.292	36.879	45.365	46.099	54.438	55.319	63.511	64.539	72.584	73.759	–	–	90.730	92.195	108.876	110.634
115	13.729	13.948	18.305	18.597	22.881	23.246	27.458	27.896	36.610	37.194	45.763	46.493	54.915	55.792	64.068	65.090	73.220	74.388	–	–	91.525	92.992	109.831	111.591
116	13.848	14.068	18.464	18.757	23.080	23.447	27.696	28.136	36.929	37.515	46.161	46.893	55.393	56.272	64.625	65.651	73.857	75.030	–	–	92.322	93.787	110.786	112.545
117	13.968	14.187	18.623	18.917	23.279	23.647	27.935	28.376	37.247	37.835	46.558	47.293	55.870	56.752	65.182	66.210	74.494	75.669	–	–	93.117	94.582	111.740	113.499
118	14.087	14.307	18.783	19.077	23.478	23.846	28.174	28.615	37.565	38.135	46.956	47.691	56.348	57.230	65.739	66.768	75.130	76.306	–	–	93.912	95.380	112.695	114.456
119	14.206	14.427	18.942	19.235	23.677	24.045	28.413	28.853	37.883	38.471	47.354	48.089	56.825	57.707	66.296	67.325	75.767	76.943	–	–	94.707	96.175	113.650	115.410
120	14.326	14.545	19.101	19.394	23.876	24.243	28.651	29.091	38.202	38.789	47.752	48.486	57.302	58.183	66.583	67.880	76.403	77.577	–	–	95.502	96.970	114.605	116.364

ROLLER CHAIN DIMENSIONS AND HORSEPOWER TABLES – METRIC

35 – 9.525 mm (0.375 in.) PITCH KILOWATTS

TABLE 29. 35 – 9.525 mm (0.375 in.) PITCH KILOWATTS

No. of Teeth	Revolutions Per Minute – Small Sprocket																										
	50	100	200	240	500	700	900	1200	1500	1800	2100	2500	3000	3500	4000	4500	5000	5500	6000	6500	7000	7500	8000	8500	9000	10000
11	0.08	0.16	0.32	0.38	0.76	1.05	1.34	1.76	2.19	2.60	3.02	2.88	2.19	1.74	1.42	1.19	1.02	0.88	0.77	0.69	0.61	0.55	0.50	0.46	0.42	0.36
12	0.09	0.18	0.34	0.41	0.83	1.15	1.46	1.93	2.39	2.84	3.29	3.28	2.50	1.98	1.62	1.36	1.16	1.01	0.88	0.78	0.70	0.63	0.57	0.52	0.48	0.41
13	0.10	0.19	0.37	0.44	0.90	1.24	1.58	2.09	2.58	3.08	3.57	3.70	2.81	2.23	1.83	1.53	1.31	1.13	1.00	0.88	0.79	0.71	0.65	0.59	0.54	0.46
14	0.11	0.21	0.40	0.48	0.97	1.34	1.70	2.25	2.78	3.31	3.84	4.13	3.15	2.50	2.04	1.71	1.46	1.27	1.11	0.99	0.88	0.80	0.72	0.66	0.61	0.07
15	0.11	0.22	0.43	0.51	1.04	1.43	1.83	2.41	2.98	3.55	4.12	4.59	3.49	2.77	2.27	1.90	1.62	1.41	1.23	1.09	0.98	0.88	0.80	0.73	0.67	0.00
16	0.12	0.24	0.46	0.55	1.11	1.53	1.95	2.57	3.18	3.79	4.39	5.05	3.84	3.05	2.50	2.09	1.79	1.55	1.36	1.21	1.08	0.97	0.88	0.81	0.33	0.00
17	0.13	0.25	0.49	0.58	1.18	1.63	2.07	2.73	3.38	4.03	4.67	5.52	4.21	3.34	2.73	2.29	1.96	1.70	1.49	1.32	1.18	1.06	0.97	0.76	0.00	
18	0.14	0.27	0.52	0.62	1.25	1.72	2.19	2.89	3.58	4.26	4.94	5.84	4.59	3.64	2.98	2.50	2.13	1.85	1.62	1.44	1.29	1.16	1.05	0.00		
19	0.14	0.28	0.55	0.65	1.32	1.82	2.31	3.05	3.78	4.50	5.22	6.17	4.97	3.95	3.23	2.71	2.31	2.00	1.76	1.56	1.40	1.26	0.04	0.00		
20	0.15	0.30	0.57	0.68	1.38	1.91	2.43	3.21	3.98	4.74	5.49	6.49	5.37	4.26	3.49	2.92	2.50	2.16	1.90	1.68	1.51	1.06				
21	0.16	0.31	0.60	0.72	1.45	2.01	2.56	3.37	4.17	4.97	5.77	6.82	5.78	4.59	3.75	3.15	2.69	2.33	2.04	1.81	1.62	0.00				
22	0.17	0.32	0.63	0.75	1.52	2.10	2.68	3.53	4.37	5.21	6.04	7.14	6.20	4.92	4.02	3.37	2.88	2.50	2.19	1.94	1.06	0.00				
23	0.17	0.34	0.66	0.79	1.59	2.20	2.80	3.69	4.57	5.45	6.31	7.47	6.62	5.26	4.30	3.61	3.08	2.67	2.34	2.08	0.00					
24	0.18	0.35	0.69	0.82	1.66	2.30	2.92	3.85	4.77	5.68	6.59	7.79	7.06	5.60	4.59	3.84	3.28	2.84	2.50	1.52	0.00					
25	0.19	0.37	0.72	0.86	1.73	2.39	3.04	4.01	4.97	5.92	6.86	8.11	7.51	5.96	4.88	4.09	3.49	3.02	2.65	0.09	0.00					
26	0.20	0.38	0.75	0.89	1.80	2.49	3.16	4.17	5.17	6.16	7.14	8.44	7.96	6.32	5.17	4.33	3.70	3.21	2.54	0.00						
28	0.21	0.41	0.80	0.96	1.94	2.68	3.41	4.49	5.57	6.63	7.69	9.09	8.90	7.06	5.78	4.84	4.13	3.58	0.00							
30	0.23	0.44	0.86	1.03	2.08	2.87	3.65	4.81	5.96	7.10	8.24	9.74	9.87	7.83	6.41	5.37	4.59	1.67	0.00							
32	0.24	0.47	0.92	1.10	2.22	3.06	3.90	5.13	6.36	7.58	8.79	10.39	10.87	8.63	7.06	5.92	4.30	0.00								
35	0.27	0.52	1.01	1.20	2.42	3.35	4.26	5.62	6.96	8.29	9.61	11.36	12.43	9.87	8.08	6.60	0.25	0.00								
40	0.30	0.59	1.15	1.37	2.77	3.83	4.87	6.42	7.95	9.47	10.98	12.98	15.19	12.06	8.23	0.25	0.00									
45	0.34	0.66	1.29	1.54	3.12	4.30	5.48	7.22	8.94	10.66	12.35	14.61	17.40	11.60	2.32	0.00										
	Type I Manual or Drip Lubrication					Type II Bath or Disc Lubrication					Type III Oil Stream Lubrication															

NOTE: The limiting RPM for each lubrication type is shown in the chart's shaded areas directly above the type I, II or III reference. For optimum results, it is suggested that the roller chain manufacturer be given the opportunity to evaluate the operating condition of chains in the shaded (galling range) speed area. The horsepower ratings of multiple-strand chains are greater than those for single strand chain. See table 1 on page 8 for multiple-strand factors.

41 – 12.700 mm (0.500 in.) PITCH KILOWATTS

TABLE 30. 41 – 12.700 mm (0.500 in.) PITCH KILOWATTS

No. of Teeth	Revolutions Per Minute – Small Sprocket																									
	10	25	50	100	180	200	300	400	500	700	900	1000	1200	1400	1600	1800	2100	2400	2700	3000	3500	4000	5000	6000	7000	8000
11	0.02	0.06	0.11	0.21	0.37	0.41	0.61	0.80	0.99	1.37	1.74	1.68	1.28	1.01	0.83	0.70	0.55	0.45	0.38	0.32	0.26	0.21	0.15	0.11	0.09	0.07
12	0.03	0.06	0.12	0.23	0.41	0.45	0.66	0.87	1.08	1.49	1.90	1.91	1.46	1.16	0.95	0.79	0.63	0.51	0.43	0.37	0.29	0.24	0.17	0.13	0.10	0.08
13	0.03	0.07	0.13	0.25	0.44	0.49	0.72	0.95	1.17	1.62	2.06	2.16	1.64	1.30	1.07	0.89	0.71	0.58	0.49	0.42	0.33	0.27	0.19	0.15	0.12	0.00
14	0.03	0.07	0.14	0.27	0.47	0.52	0.77	1.02	1.26	1.74	2.22	2.41	1.84	1.46	1.19	1.00	0.79	0.65	0.54	0.46	0.37	0.30	0.22	0.16	0.13	0.00
15	0.03	0.08	0.15	0.29	0.51	0.56	0.83	1.09	1.35	1.87	2.38	2.63	2.04	1.61	1.32	1.11	0.88	0.72	0.60	0.51	0.41	0.33	0.24	0.18	0.14	0.00
16	0.03	0.08	0.16	0.31	0.54	0.60	0.88	1.16	1.44	1.99	2.54	2.81	2.24	1.78	1.46	1.22	0.97	0.79	0.66	0.57	0.45	0.37	0.26	0.20	0.00	
17	0.04	0.09	0.17	0.33	0.57	0.64	0.94	1.24	1.53	2.12	2.69	2.98	2.46	1.95	1.59	1.34	1.06	0.87	0.73	0.62	0.49	0.40	0.29	0.22	0.00	
18	0.04	0.09	0.18	0.35	0.61	0.67	0.99	1.31	1.62	2.24	2.85	3.16	2.68	2.12	1.74	1.46	1.16	0.95	0.79	0.68	0.54	0.44	0.31	0.24	0.00	
19	0.04	0.10	0.19	0.37	0.64	0.71	1.05	1.38	1.71	2.37	3.01	3.33	2.90	2.30	1.88	1.58	1.25	1.03	0.86	0.73	0.58	0.48	0.34	0.07	0.00	
20	0.04	0.10	0.20	0.38	0.68	0.75	1.10	1.45	1.80	2.49	3.17	3.51	3.13	2.49	2.04	1.71	1.35	1.11	0.93	0.79	0.63	0.51	0.37	0.00		
21	0.04	0.11	0.21	0.40	0.71	0.79	1.16	1.53	1.89	2.61	3.33	3.68	3.37	2.68	2.19	1.84	1.46	1.19	1.00	0.85	0.68	0.55	0.40	0.00		
22	0.05	0.11	0.22	0.42	0.74	0.82	1.21	1.60	1.98	2.74	3.49	3.86	3.61	2.87	2.35	1.97	1.56	1.28	1.07	0.91	0.73	0.59	0.43	0.00		
23	0.05	0.12	0.23	0.44	0.78	0.86	1.27	1.67	2.07	2.86	3.64	4.03	3.86	3.07	2.51	2.10	1.67	1.37	1.14	0.98	0.78	0.63	0.45	0.00		
24	0.05	0.12	0.24	0.46	0.81	0.90	1.32	1.75	2.16	2.99	3.80	4.21	4.12	3.27	2.68	2.24	1.78	1.46	1.22	1.04	0.83	0.68	0.48	0.00		
25	0.05	0.13	0.25	0.48	0.84	0.93	1.38	1.82	2.25	3.11	3.96	4.38	4.38	3.47	2.84	2.38	1.89	1.55	1.30	1.11	0.88	0.72	0.00			
26	0.05	0.13	0.26	0.50	0.88	0.97	1.43	1.89	2.34	3.24	4.12	4.56	4.64	3.69	3.02	2.53	2.01	1.64	1.38	1.17	0.93	0.76	0.00			
28	0.06	0.14	0.28	0.54	0.95	1.05	1.55	2.04	2.52	3.49	4.44	4.91	5.19	4.12	3.37	2.83	2.24	1.84	1.54	1.31	1.04	0.85	0.00			
30	0.06	0.15	0.30	0.58	1.01	1.12	1.66	2.18	2.70	3.73	4.75	5.26	5.76	4.57	3.74	3.13	2.49	2.04	1.71	1.46	1.16	0.95	0.00			
32	0.07	0.16	0.32	0.62	1.08	1.20	1.77	2.33	2.88	3.98	5.07	5.61	6.34	5.03	4.12	3.45	2.74	2.24	1.88	1.60	1.27	1.04				
35	0.07	0.18	0.35	0.67	1.18	1.31	1.93	2.55	3.15	4.36	5.55	6.14	7.31	5.76	4.71	3.95	3.13	2.56	2.15	1.84	1.46	0.00				
40	0.08	0.20	0.40	0.77	1.35	1.50	2.21	2.91	3.60	4.98	6.34	7.01	8.35	7.03	5.76	4.82	3.83	3.13	2.63	2.24	0.00					
45	0.09	0.23	0.44	0.87	1.52	1.68	2.48	3.27	4.06	5.60	7.13	7.89	9.40	8.39	6.87	5.76	4.57	3.74	3.13	2.68	0.00					
	Type I Manual or Drip Lubrication							Type II Bath or Disc Lubrication							Type III Oil Stream Lubrication											

NOTE: The limiting RPM for each lubrication type is shown in the chart's shaded areas directly above the type I, II or III reference. For optimum results, it is suggested that the roller chain manufacturer be given the opportunity to evaluate the operating condition of chains in the shaded (galling range) speed area. The horsepower ratings of multiple-strand chains are greater than those for single strand chain. See table 1 on page 8 for multiple-strand factors.

40 – 12.700 mm (0.500 in.) PITCH KILOWATTS

TABLE 31. 40 – 12.700 mm (0.500 in.) PITCH KILOWATTS

No. of Teeth	Revolutions Per Minute – Small Sprocket																										
	10	25	50	100	180	200	300	400	500	700	900	1000	1200	1400	1600	1800	2100	2400	2700	3000	3500	4000	5000	6000	7000	8000	8500
11	0.06	0.14	0.27	0.52	0.91	1.00	1.48	1.95	2.42	3.34	4.25	4.70	5.60	6.49	5.57	4.66	3.70	3.03	2.54	2.17	1.72	1.41	1.01	0.77	0.61	0.50	0.45
12	0.06	0.15	0.29	0.56	0.99	1.09	1.61	2.13	2.64	3.64	4.64	5.13	6.11	7.09	6.34	5.31	4.22	3.45	2.89	2.47	1.96	1.60	1.15	0.87	0.69	0.57	0.00
13	0.07	0.16	0.31	0.61	1.07	1.19	1.75	2.31	2.86	3.95	5.02	5.56	6.62	7.68	7.15	5.99	4.76	3.89	3.26	2.79	2.21	1.81	1.29	0.98	0.78	0.00	
14	0.07	0.17	0.34	0.66	1.15	1.28	1.88	2.48	3.08	4.25	5.41	5.98	7.13	8.27	7.99	6.70	5.31	4.35	3.65	3.11	2.47	2.02	1.45	1.10	0.87	0.00	
15	0.08	0.19	0.36	0.70	1.24	1.37	2.02	2.66	3.30	4.55	5.80	6.41	7.64	8.86	8.86	7.43	5.89	4.82	4.04	3.45	2.74	2.24	1.60	1.22	0.97	0.00	
16	0.08	0.20	0.39	0.75	1.32	1.46	2.15	2.84	3.52	4.86	6.18	6.84	8.15	9.45	9.76	8.18	6.49	5.31	4.45	3.80	3.02	2.47	1.77	1.34	0.00		
17	0.09	0.21	0.41	0.80	1.40	1.55	2.2	3.02	3.74	5.16	6.57	7.27	8.66	10.04	10.69	8.96	7.11	5.82	4.88	4.17	3.31	2.71	1.94	1.47	0.00		
18	0.09	0.22	0.43	0.84	1.48	1.64	2.42	3.19	3.96	5.46	6.95	7.69	9.17	10.63	11.65	9.76	7.75	6.34	5.31	4.54	3.60	2.95	2.11	1.60	0.00		
19	0.10	0.24	0.46	0.89	1.57	1.73	2.56	3.37	4.18	5.77	7.34	8.12	9.68	11.22	12.64	10.59	8.40	6.88	5.76	4.92	3.91	3.20	2.29	0.09	0.00		
20	0.10	0.25	0.48	0.94	1.65	1.82	2.69	3.55	4.39	6.07	7.73	8.55	10.18	11.81	13.42	11.44	9.07	7.43	6.22	5.31	4.22	3.45	2.47	0.00			
21	0.11	0.26	0.51	0.98	1.73	1.91	2.83	3.72	4.61	6.37	8.11	8.98	10.69	12.40	14.10	12.30	9.76	7.99	6.70	5.72	4.54	3.71	2.66	0.00			
22	0.11	0.27	0.53	1.03	1.81	2.01	2.96	3.90	4.83	6.68	8.50	9.40	11.20	12.99	14.77	13.19	10.47	8.57	7.18	6.13	4.87	3.98	2.85	0.00			
23	0.12	0.28	0.55	1.08	1.90	2.10	3.10	4.08	5.05	6.98	8.89	9.83	11.71	13.58	15.44	14.10	11.19	9.16	7.68	6.55	5.20	4.26	3.05	0.00			
24	0.12	0.30	0.58	1.12	1.98	2.19	3.23	4.26	5.27	7.28	9.27	10.26	12.22	14.17	16.11	15.03	11.93	9.76	8.18	6.99	5.54	4.54	0.87	0.00			
25	0.13	0.31	0.60	1.17	2.06	2.28	3.36	4.43	5.49	7.59	9.66	10.69	12.73	14.76	16.78	15.98	12.68	10.38	8.70	7.43	5.89	4.82	0.00				
26	0.13	0.32	0.63	1.22	2.14	2.37	3.50	4.61	5.71	7.89	10.04	11.11	13.24	15.35	17.45	16.95	13.45	11.01	9.23	7.88	6.25	5.12	0.00				
28	0.14	0.35	0.67	1.31	2.31	2.55	3.77	4.97	6.15	8.50	10.82	11.97	14.26	16.53	18.79	18.94	15.03	12.30	10.31	8.80	6.99	5.72	0.00				
30	0.15	0.37	0.72	1.41	2.47	2.74	4.04	5.32	6.59	9.11	11.59	12.82	15.28	17.71	20.14	21.01	16.67	13.65	11.44	9.76	7.75	6.34	0.00				
32	0.16	0.40	0.77	1.50	2.64	2.92	4.31	5.68	7.03	9.71	12.36	13.68	16.30	18.89	21.48	23.14	18.37	15.03	12.60	10.76	8.54	1.41					
35	0.18	0.43	0.84	1.64	2.88	3.19	4.71	6.21	7.69	10.62	13.52	14.96	17.82	20.67	23.49	26.30	21.01	17.20	14.41	12.30	9.76	0.00					
40	0.21	0.50	0.96	1.87	3.30	3.65	5.38	7.09	8.79	12.14	15.45	17.10	20.37	23.62	26.85	30.06	25.67	21.01	17.61	15.03	0.00						
45	0.23	0.56	1.08	2.11	3.71	4.10	6.06	7.98	9.89	13.66	17.39	19.24	22.92	26.57	30.20	33.82	30.63	25.07	21.01	5.53	0.00						
	Type I Manual or Drip Lubrication						Type II Bath or Disc Lubrication								Type III Oil Stream Lubrication												

NOTE: The limiting RPM for each lubrication type is shown in the chart's shaded areas directly above the type I, II or III reference. For optimum results, it is suggested that the roller chain manufacturer be given the opportunity to evaluate the operating condition of chains in the shaded (galling range) speed area. The horsepower ratings of multiple-strand chains are greater than those for single strand chain. See table 1 on page 8 for multiple-strand factors.

50 – 15.310 mm (0.625 in.) PITCH KILOWATTS

TABLE 32. 50 – 15.310 mm (0.625 in.) PITCH KILOWATTS

No. of Teeth	Revolutions Per Minute – Small Sprocket																									
	10	25	50	100	140	200	300	500	700	900	1200	1500	1800	2100	2500	3000	3500	4000	4500	5000	5500	6000	6500	7000	7500
11	0.08	0.20	0.39	0.75	1.04	1.45	2.15	3.50	4.85	6.17	7.64	5.47	4.16	3.30	2.54	1.93	1.54	1.25	1.05	0.89	0.78	0.69	0.60	0.54	0.00
12	0.09	0.22	0.42	0.81	1.13	1.59	2.34	3.83	5.29	6.73	8.70	6.23	4.74	3.76	2.89	2.20	1.74	1.43	1.20	1.02	0.89	0.78	0.69	0.00	
13	0.10	0.23	0.45	0.89	1.22	1.72	2.54	4.15	5.73	7.29	9.60	7.02	5.34	4.24	3.27	2.48	1.97	1.61	1.35	1.16	1.00	0.88	0.00		
14	0.10	0.25	0.49	0.95	1.31	1.85	2.74	4.47	6.17	7.85	10.34	7.84	5.97	4.74	3.65	2.77	2.20	1.80	1.51	1.29	1.12	0.21	0.00		
15	0.11	0.27	0.52	1.02	1.41	1.98	2.93	4.78	6.61	8.41	11.08	8.70	6.62	5.26	4.04	3.08	2.44	2.00	1.68	1.43	1.24	0.00	1.19		
16	0.12	0.29	0.56	1.09	1.51	2.12	3.12	5.10	7.05	8.97	11.82	9.59	7.29	5.79	4.46	3.39	2.69	2.20	1.84	1.57	0.00				
17	0.13	0.31	0.60	1.16	1.60	2.25	3.32	5.42	7.49	9.53	12.57	10.50	7.99	6.34	4.88	3.71	2.95	2.41	2.02	1.72	0.00				
18	0.13	0.32	0.63	1.22	1.69	2.38	3.51	5.74	7.93	10.09	13.30	11.44	8.70	6.91	5.32	4.04	3.21	2.62	2.20	0.04					
19	0.14	0.34	0.66	1.29	1.78	2.51	3.71	6.06	8.37	10.65	14.04	12.41	9.44	7.49	5.76	4.38	3.48	2.85	2.39	0.00					
20	0.15	0.36	0.70	1.36	1.88	2.65	3.91	6.38	8.81	11.22	14.78	13.40	10.19	8.09	6.23	4.74	3.76	3.08	2.58	0.00					
21	0.16	0.38	0.73	1.43	1.98	2.78	4.10	6.70	9.25	11.77	15.52	14.42	10.97	8.70	6.70	5.10	4.04	3.31	0.00						
22	0.16	0.40	0.77	1.50	2.07	2.91	4.30	7.02	9.69	12.33	16.26	15.46	11.76	9.34	7.19	5.47	4.34	3.55	0.00						
23	0.17	0.41	0.81	1.57	2.16	3.04	4.49	7.33	10.13	12.89	16.99	16.52	12.57	9.98	7.68	5.85	4.64	3.80	0.00						
24	0.18	0.43	0.84	1.63	2.25	3.18	4.68	7.65	10.57	13.45	17.73	17.61	13.40	10.63	8.19	6.23	4.94	1.01	0.00						
25	0.19	0.45	0.87	1.70	2.35	3.31	4.88	7.97	11.01	14.01	18.47	18.72	14.25	11.30	8.70	6.62	5.26								
26	0.19	0.47	0.91	1.77	2.45	3.44	5.08	8.29	11.45	14.58	19.21	19.87	15.11	11.99	9.23	7.02	5.57	0.00							
28	0.21	0.50	0.98	1.90	2.63	3.71	5.47	8.93	12.33	15.70	20.69	22.20	16.89	13.40	10.32	7.84	3.53	0.00							
30	0.22	0.54	1.05	2.04	2.82	3.97	5.86	9.57	13.21	16.82	22.17	24.62	18.72	14.86	11.44	8.70	0.00								
32	0.24	0.57	1.12	2.18	3.01	4.24	6.25	10.20	14.09	17.94	23.65	27.12	20.63	16.38	12.60	9.59	0.00								
35	0.26	0.63	1.22	2.38	3.29	4.63	6.83	11.16	15.41	19.62	25.86	31.02	23.60	18.72	14.42	0.70	0.00								
40	0.30	0.72	1.40	2.72	3.76	5.29	7.81	12.75	17.62	22.42	29.56	36.62	28.84	22.88	17.61	0.00									
45	0.34	0.81	1.57	3.06	4.23	5.95	8.78	14.35	19.82	25.23	33.25	41.19	34.41	27.30	6.44										
	Type I Manual or Drip Lubrication						Type II Bath or Disc Lubrication					Type III Oil Stream Lubrication														

NOTE: The limiting RPM for each lubrication type is shown in the chart's shaded areas directly above the type I, II or III reference. For optimum results, it is suggested that the roller chain manufacturer be given the opportunity to evaluate the operating condition of chains in the shaded (galling range) speed area. The horsepower ratings of multiple-strand chains are greater than those for single strand chain. See table 1 on page 8 for multiple-strand factors.

60 – 19.050 mm (0.750 in.) PITCH KILOWATTS

TABLE 33. 60 – 19.050 mm (0.750 in.) PITCH KILOWATTS

No. of Teeth	Revolutions Per Minute – Small Sprocket																												
	10	25	50	100	120	200	300	400	500	600	700	800	900	1000	1100	1200	1400	1600	1800	2000	2500	3000	3500	4000	4500	5000	5500	6000
11	0.14	0.34	0.66	1.29	1.53	2.50	3.69	4.87	6.03	7.18	8.33	9.46	10.60	11.62	10.07	8.84	7.01	5.74	4.81	4.11	2.94	2.24	1.77	1.45	1.22	1.04	0.90	0.00
12	0.15	0.37	0.72	1.40	1.67	2.73	4.03	5.31	6.58	7.83	9.08	10.33	11.56	12.79	11.47	10.07	7.99	6.54	5.48	4.68	3.35	2.55	2.02	1.65	1.39	1.18	1.03	0.00
13	0.17	0.40	0.78	1.52	1.81	2.96	4.36	5.75	7.12	8.49	9.84	11.19	12.52	13.86	12.94	11.36	9.01	7.38	6.18	5.28	3.78	2.87	2.28	1.87	1.56	1.34	0.00	
14	0.18	0.43	0.84	1.64	1.95	3.18	4.70	6.19	7.67	9.14	10.60	12.05	13.49	14.92	14.46	12.69	10.07	8.24	6.91	5.90	4.22	3.21	2.55	2.09	1.75	0.31	0.00	
15	0.19	0.46	0.90	1.75	2.09	3.41	5.03	6.63	8.22	9.79	11.35	12.91	14.45	15.99	16.04	14.07	11.17	9.14	7.66	6.54	4.68	3.56	2.83	2.31	1.94	0.00		
16	0.21	0.49	0.96	1.87	2.23	3.64	5.37	7.08	8.77	10.44	12.11	13.77	15.42	17.06	17.67	15.50	12.30	10.07	8.44	7.21	5.16	3.92	3.11	2.55	1.33	0.00		
17	0.22	0.53	1.02	1.99	2.37	3.87	5.70	7.52	9.32	11.10	12.87	14.63	16.38	18.12	19.35	16.98	13.48	11.03	9.24	7.89	5.65	4.30	3.41	2.79	0.00			
18	0.23	0.56	1.08	2.10	2.51	4.09	6.04	7.96	9.86	11.75	13.62	15.49	17.34	19.19	21.03	18.50	14.68	12.02	10.07	8.60	6.15	4.68	3.71	3.04	0.00			
19	0.24	0.59	1.14	2.22	2.65	4.32	6.38	8.40	10.41	12.40	14.38	16.35	18.31	20.25	22.19	20.06	15.92	13.03	10.92	9.32	6.67	5.08	4.03	0.15	0.00			
20	0.26	0.62	1.20	2.34	2.78	4.55	6.71	8.85	10.96	13.06	15.14	17.21	19.27	21.32	23.36	21.67	17.20	14.07	11.80	10.07	7.21	5.48	4.35	0.00				
21	0.27	0.65	1.26	2.45	2.92	4.77	7.05	9.29	11.51	13.71	15.90	18.07	20.23	22.39	24.53	23.31	18.50	15.14	12.69	10.84	7.75	5.90	4.68	0.00				
22	0.28	0.68	1.32	2.57	3.06	5.00	7.38	9.73	12.06	14.36	16.65	18.93	21.20	23.45	25.70	25.00	19.84	16.24	13.61	11.62	8.31	6.32	0.00					
23	0.29	0.71	1.38	2.69	3.20	5.23	7.72	10.17	12.60	15.01	17.41	19.79	22.16	24.52	26.87	26.72	21.21	17.36	14.55	12.42	8.89	6.76	0.00					
24	0.31	0.74	1.44	2.81	3.34	5.46	8.05	10.62	13.15	15.67	18.17	20.65	23.12	25.58	28.04	28.48	22.60	18.50	15.50	13.24	9.47	7.21	0.00					
25	0.32	0.77	1.50	2.92	3.48	5.68	8.39	11.06	13.70	16.32	18.92	21.51	24.09	26.65	29.20	30.28	24.03	19.67	16.48	14.07	10.07	7.66	0.00					
26	0.33	0.80	1.56	3.04	3.62	5.91	8.73	11.50	14.25	16.97	19.68	22.37	25.05	27.72	30.37	32.12	25.49	20.86	17.48	14.93	10.68	8.13	0.00					
28	0.36	0.86	1.68	3.27	3.90	6.37	9.40	12.38	15.34	18.28	21.19	24.09	26.98	29.85	32.71	35.56	28.48	23.31	19.54	16.68	11.94	0.00						
30	0.38	0.93	1.80	3.51	4.18	6.82	10.07	13.27	16.44	19.58	22.71	25.81	28.90	31.98	35.04	38.10	31.59	25.86	21.67	18.50	13.24	0.00						
32	0.41	0.99	1.92	3.74	4.46	7.28	10.74	14.15	17.54	20.89	24.22	27.53	30.83	34.11	37.38	40.64	34.80	28.48	23.87	20.38	14.58	0.00						
35	0.45	1.08	2.10	4.09	4.87	7.96	11.75	15.48	19.18	22.85	26.49	30.12	33.72	37.31	40.89	44.45	39.81	32.58	27.31	23.31	1.01	0.00						
40	0.51	1.24	2.40	4.68	5.57	9.10	13.42	17.69	21.92	26.11	30.28	34.42	38.54	42.64	46.73	50.80	48.64	39.81	33.36	28.48	0.00							
45	0.58	1.39	2.70	5.26	6.27	10.23	15.10	19.90	24.66	29.38	34.06	38.72	43.36	47.97	52.57	57.15	58.03	47.50	39.81	9.28	0.00							
	Type I Manual or Drip Lubrication				Type II Bath or Disc Lubrication							Type III Oil Stream Lubrication																	

NOTE: The limiting RPM for each lubrication type is shown in the chart's shaded areas directly above the type I, II or III reference. For optimum results, it is suggested that the roller chain manufacturer be given the opportunity to evaluate the operating condition of chains in the shaded (galling range) speed area. The horsepower ratings of multiple-strand chains are greater than those for single strand chain. See table 1 on page 8 for multiple-strand factors.

80 - 25.400 mm (1.00 in.) PITCH KILOWATTS

TABLE 34. 80 - 25.400 mm (1.00 in.) PITCH KILOWATTS

No. of Teeth	Revolutions Per Minute – Small Sprocket																												
	10	25	50	75	88	100	150	200	300	400	500	600	700	800	900	1000	1100	1200	1400	1600	1800	2000	2200	2400	2700	3000	3300	3600	4000	4500
11	0.33	0.79	1.54	2.28	2.66	3.00	4.43	5.84	8.62	11.36	14.07	16.77	19.44	20.44	17.13	14.63	12.68	11.13	8.83	7.23	6.06	5.17	4.48	3.93	3.30	2.81	2.44	2.14	1.83	0.00
12	0.36	0.87	1.68	2.48	2.90	3.27	4.83	6.37	9.40	12.39	15.35	18.29	21.21	23.29	19.52	16.66	14.44	12.68	10.06	8.23	6.90	5.89	5.11	4.48	3.76	3.21	2.78	2.44	2.08	0.00
13	0.39	0.94	1.82	2.69	3.14	3.55	5.24	6.90	10.19	13.43	16.63	19.81	22.97	26.12	22.01	18.79	16.29	14.29	11.34	9.28	7.78	6.64	5.76	5.05	4.24	3.62	3.13	2.75	0.00	
14	0.42	1.01	1.96	2.90	3.38	3.82	5.64	7.43	10.97	14.46	17.91	21.34	24.74	28.13	24.59	21.00	18.20	15.97	12.68	10.38	8.70	7.42	6.44	5.65	4.73	4.04	3.50	3.07	0.00	
15	0.45	1.08	2.10	3.11	3.62	4.09	6.04	7.96	11.75	15.49	19.19	22.86	26.51	30.14	27.28	23.29	20.19	17.72	14.06	11.51	9.64	8.23	7.14	6.26	5.25	4.48	3.88	0.00		
16	0.48	1.15	2.24	3.31	3.86	4.37	6.44	8.49	12.54	16.52	20.47	24.39	28.28	32.14	30.05	25.66	22.24	19.52	15.49	12.68	10.62	9.07	7.86	6.90	5.78	4.94	4.28	0.00		
17	0.51	1.23	2.38	3.52	4.10	4.64	6.85	9.03	13.32	17.56	21.75	25.91	30.04	34.15	32.91	28.10	24.36	21.38	16.96	13.88	11.64	9.93	8.61	7.56	6.33	5.41	0.00			
18	0.54	1.30	2.53	3.73	4.35	4.91	7.25	9.56	14.10	18.59	23.03	27.44	31.81	36.16	35.86	30.61	26.54	23.29	18.48	15.13	12.68	10.82	9.38	8.23	6.90	5.89	0.00			
19	0.57	1.37	2.67	3.93	4.59	5.19	7.65	10.09	14.89	19.62	24.31	28.96	33.58	38.17	38.88	33.20	28.78	25.26	20.04	16.40	13.75	11.74	10.17	8.93	7.48	0.27	0.00			
20	0.60	1.44	2.81	4.14	4.83	5.46	8.06	10.62	15.67	20.65	25.59	30.48	35.35	40.18	41.99	35.86	31.08	27.28	21.65	17.72	14.85	12.68	10.99	9.64	8.08	0.00				
21	0.63	1.51	2.95	4.35	5.07	5.73	8.46	11.15	16.45	21.69	26.87	32.01	37.11	42.19	45.18	38.58	33.44	29.35	23.29	19.06	15.97	13.64	11.82	10.38	8.70	0.00				
22	0.66	1.59	3.09	4.56	5.31	6.00	8.86	11.68	17.24	22.72	28.15	33.53	38.88	44.20	48.45	41.37	35.86	31.47	24.97	20.44	17.13	14.63	12.68	11.13	0.00					
23	0.69	1.66	3.23	4.76	5.55	6.28	9.26	12.21	18.02	23.75	29.43	35.06	40.65	46.21	51.74	44.22	38.33	33.64	26.69	21.85	18.31	15.63	13.55	11.89	0.00					
24	0.72	1.73	3.37	4.97	5.79	6.55	9.67	12.74	18.80	24.79	30.71	36.58	42.42	48.22	53.99	47.13	40.85	35.86	28.45	23.29	19.52	16.66	14.44	12.68	0.00					
25	0.75	1.80	3.51	5.18	6.03	6.82	10.07	13.27	19.59	25.82	31.99	38.11	44.18	50.23	56.24	50.11	43.43	38.12	30.25	24.76	20.75	17.72	15.36	6.08	0.00					
26	0.78	1.88	3.65	5.38	6.28	7.10	10.47	13.80	20.37	26.85	33.27	39.63	45.95	52.23	58.49	53.15	46.07	40.43	32.08	26.26	22.01	18.79	16.29	0.00						
28	0.84	2.02	3.93	5.80	6.76	7.64	11.28	14.86	21.94	28.92	35.82	42.68	49.48	56.25	62.99	59.40	51.48	45.18	35.86	29.35	24.59	21.00	6.88	0.00						
30	0.90	2.16	4.21	6.21	7.24	8.19	12.08	15.93	23.51	30.98	38.38	45.73	53.02	60.27	67.49	65.87	57.10	50.11	39.77	32.55	27.28	23.29	0.00							
32	0.96	2.31	4.49	6.63	7.72	8.73	12.89	16.99	25.07	33.05	40.94	48.77	56.55	64.29	71.98	72.57	62.90	55.20	43.81	35.86	30.05	4.21	0.00							
35	1.05	2.52	4.91	7.25	8.45	9.55	14.10	18.58	27.42	36.15	44.78	53.35	61.86	70.32	78.73	83.01	71.95	63.15	50.11	41.01	20.99	0.00								
40	1.20	2.88	5.61	8.28	9.66	10.92	16.11	21.24	31.34	41.31	51.18	60.97	70.69	80.36	89.98	99.56	87.91	77.15	61.22	29.95	0.00									
45	1.35	3.25	6.31	9.32	10.86	12.28	18.12	23.89	35.26	46.47	57.58	68.59	79.53	90.41	101.23	112.00	104.89	92.06	53.90	0.00										
	Type I Manual or Drip Lubrication				Type II Bath or Disc Lubrication									Type III Oil Stream Lubrication																

NOTE: The limiting RPM for each lubrication type is shown in the chart's shaded areas directly above the type I, II or III reference. For optimum results, it is suggested that the roller chain manufacturer be given the opportunity to evaluate the operating condition of chains in the shaded (galling range) speed area. The horsepower ratings of multiple-strand chains are greater than those for single strand chain. See table 1 on page 8 for multiple-strand factors.

100 – 31.750 mm (1.250 in.) PITCH KILOWATTS

TABLE 35. TABLE X. 100 – 31.750 mm (1.250 in.) PITCH KILOWATTS

No. of Teeth	Revolutions Per Minute – Small Sprocket																														
	5	10	25	50	71	75	100	150	200	300	400	500	600	700	800	900	1000	1100	1200	1400	1600	1800	2000	2200	2400	2700	3000	3300	3600	4500
11	0.32	0.63	1.52	2.95	4.14	4.36	5.75	8.49	11.19	16.51	21.76	26.96	32.11	29.85	24.44	20.48	17.49	15.15	13.30	10.55	8.64	7.24	6.18	5.36	4.71	3.94	3.36	2.92	0.00	0.00
12	0.35	0.69	1.66	3.22	4.51	4.76	6.27	9.25	12.20	18.01	23.74	29.41	35.03	34.01	27.84	23.33	19.92	17.27	15.15	12.03	9.84	8.25	7.05	6.11	5.36	4.49	3.83	3.33	0.00	0.00
13	0.38	0.75	1.80	3.49	4.89	5.15	6.79	10.03	13.22	19.51	25.71	31.86	37.95	38.35	31.39	26.31	22.46	19.47	17.09	13.56	11.10	9.30	7.94	6.88	6.04	5.06	4.33	0.00		
14	0.41	0.81	1.93	3.76	5.26	5.56	7.32	10.80	14.24	21.01	27.70	34.31	40.87	42.86	35.09	29.40	25.10	21.76	19.10	15.15	12.40	10.40	8.87	7.70	6.75	5.66	0.84	0.00		
15	0.44	0.86	2.07	4.03	5.64	5.95	7.84	11.57	15.25	22.51	29.67	36.76	43.79	47.54	38.91	32.61	27.84	24.13	21.18	16.81	13.76	11.53	9.84	8.53	7.49	6.28	0.00			
16	0.47	0.92	2.21	4.30	6.02	6.35	8.37	12.34	16.27	24.01	31.65	39.21	46.71	52.37	42.86	35.92	30.67	26.58	23.33	18.52	15.15	12.70	10.84	9.40	8.25	3.68	0.00			
17	0.50	0.98	2.35	4.57	6.40	6.74	8.89	13.12	17.29	25.51	33.63	41.66	49.63	57.35	46.94	39.34	33.59	29.11	25.56	20.28	16.60	13.91	11.88	10.29	9.04	0.00				
18	0.53	1.03	2.48	4.84	6.77	7.14	9.41	13.88	18.31	27.02	35.61	44.11	52.55	60.93	51.15	42.86	36.60	31.72	27.84	22.10	18.08	15.15	12.94	11.22	9.84	0.00				
19	0.56	1.09	2.62	5.11	7.15	7.53	9.93	14.66	19.32	28.52	37.58	46.56	55.47	64.32	55.47	46.49	39.69	34.40	30.19	23.96	19.61	16.44	14.03	12.16	0.42	0.00				
20	0.59	1.15	2.76	5.38	7.52	7.93	10.45	15.43	20.34	30.01	39.56	49.01	58.39	67.70	59.90	50.20	42.86	37.15	32.61	25.88	21.18	17.75	15.15	13.14	0.00					
21	0.62	1.20	2.90	5.64	7.90	8.33	10.98	16.20	21.36	31.51	41.54	51.46	61.30	71.09	64.45	54.01	46.12	39.98	35.09	27.84	22.79	19.10	16.31	6.09	0.00					
22	0.65	1.26	3.04	5.91	8.28	8.72	11.50	16.97	22.37	33.02	43.52	53.91	64.23	74.47	69.11	57.92	49.45	42.86	37.62	29.85	24.44	20.48	17.49	0.00						
23	0.68	1.32	3.18	6.18	8.65	9.12	12.02	17.74	23.39	34.52	45.50	56.37	67.14	77.86	73.88	61.91	52.86	45.82	40.22	31.91	26.12	21.89	18.69	0.00						
24	0.71	1.37	3.32	6.45	9.03	9.52	12.54	18.52	24.41	36.02	47.47	58.81	70.07	81.24	78.75	65.99	56.35	48.84	42.86	34.01	27.84	23.33	4.05	0.00						
25	0.74	1.43	3.45	6.72	9.40	9.92	13.06	19.28	25.42	37.52	49.45	61.27	72.98	84.62	83.72	70.16	59.90	51.92	45.57	36.16	29.60	24.80	0.00							
26	0.77	1.49	3.59	6.99	9.78	10.31	13.59	20.06	26.44	39.02	51.43	63.72	75.90	88.01	88.79	74.41	63.53	55.07	48.33	38.35	31.39	26.31	0.00							
28	0.83	1.60	3.87	7.52	10.54	11.10	14.64	21.60	28.47	42.02	55.38	68.62	81.74	94.78	99.23	83.16	71.01	61.54	54.01	42.86	35.09	0.00								
30	0.89	1.72	4.15	8.06	11.29	11.89	15.68	23.15	30.51	45.03	59.34	73.52	87.58	101.55	110.05	92.23	78.75	68.25	59.90	47.54	36.84	0.00								
32	0.94	1.83	4.42	8.60	12.04	12.69	16.73	24.69	32.54	48.02	63.30	78.42	93.42	108.32	121.24	101.60	86.75	75.20	65.99	52.37	6.58	0.00								
35	1.03	2.01	4.83	9.40	13.17	13.88	18.29	27.00	35.59	52.53	69.23	85.77	102.18	118.48	134.68	116.22	99.23	86.01	75.49	51.47	0.00									
40	1.18	2.29	5.53	10.75	15.05	15.86	20.91	30.86	40.67	60.03	79.13	98.02	116.78	135.40	153.92	142.00	121.24	105.08	91.48	0.00										
45	1.33	2.58	6.22	12.10	16.93	17.84	23.52	34.71	45.76	67.53	89.01	110.28	131.37	152.32	173.16	169.43	144.67	125.39	25.79	0.00										
	Type I Manual or Drip Lubrication					Type II Bath or Disc Lubrication							Type III Oil Stream Lubrication																		

NOTE: The limiting RPM for each lubrication type is shown in the chart's shaded areas directly above the type I, II or III reference. For optimum results, it is suggested that the roller chain manufacturer be given the opportunity to evaluate the operating condition of chains in the shaded (galling range) speed area. The horsepower ratings of multiple-strand chains are greater than those for single strand chain. See table 1 on page 8 for multiple-strand factors.

120 – 38.100 mm (1.500 in.) PITCH KILOWATTS

TABLE 36. 120 – 38.100 mm (1.500 in.) PITCH KILOWATTS

No. of Teeth	Revolutions Per Minute – Small Sprocket																											
	5	10	25	50	60	75	100	150	200	300	400	500	600	700	800	900	1000	1100	1200	1400	1600	1800	2000	2200	2400	2700	3000
11	0.54	1.07	2.57	4.99	5.94	7.37	9.71	14.33	18.89	27.87	36.74	45.52	43.53	34.54	28.27	23.69	20.23	17.53	15.39	12.21	9.99	8.37	7.15	6.20	5.44	4.56	0.00
12	0.60	1.16	2.80	5.44	6.49	8.04	10.59	15.63	20.60	30.41	40.08	49.66	49.60	39.36	32.21	26.99	23.05	19.98	17.53	13.91	11.39	9.54	8.15	7.06	6.20	5.20	0.00
13	0.65	1.26	3.03	5.90	7.02	8.70	11.48	16.93	22.32	32.95	43.42	53.79	55.92	44.38	36.32	30.44	25.99	22.53	19.77	15.69	12.84	10.76	9.19	7.96	6.99	0.00	
14	0.69	1.36	3.27	6.35	7.57	9.37	12.36	18.24	24.04	35.48	46.76	57.93	62.50	49.60	40.60	34.02	29.05	25.17	22.10	17.53	14.35	12.03	10.27	8.90	7.81	0.00	
15	0.75	1.45	3.50	6.81	8.11	10.04	13.24	19.54	25.76	38.02	50.10	62.07	69.31	55.00	45.02	37.72	32.21	27.92	24.50	19.45	15.91	13.34	11.39	9.87	0.00		
16	0.80	1.55	3.73	7.26	8.65	10.72	14.12	20.84	27.47	40.54	53.44	66.21	76.35	60.60	49.60	41.57	35.49	30.76	26.99	21.42	17.53	14.70	12.55	10.87	0.00		
17	0.84	1.65	3.97	7.71	9.19	11.39	15.00	22.15	29.19	43.08	56.79	70.35	83.62	66.36	54.32	45.52	38.87	33.69	29.57	23.46	19.20	16.09	13.74	0.00			
18	0.89	1.74	4.20	8.17	9.73	12.05	15.89	23.45	30.91	45.61	60.13	74.49	88.74	72.30	59.18	49.60	42.34	36.70	32.21	25.56	20.92	17.53	14.97	0.00			
19	0.95	1.84	4.43	8.62	10.27	12.72	16.77	24.75	32.62	48.15	63.47	78.63	93.67	78.41	64.17	53.79	45.92	39.81	34.94	27.73	22.69	19.02	0.60	0.00			
20	0.99	1.94	4.67	9.08	10.81	13.39	17.65	26.05	34.34	50.69	66.81	82.77	98.60	84.68	69.31	58.08	49.60	42.99	37.72	29.94	24.50	20.54	0.00				
21	1.04	2.04	4.90	9.53	11.35	14.06	18.54	27.36	36.06	53.22	70.15	86.90	103.53	91.11	74.57	62.50	53.36	46.25	40.60	32.21	26.37	20.48	0.00				
22	1.10	2.13	5.13	9.98	11.89	14.74	19.42	28.66	37.78	55.75	73.49	91.04	108.45	97.69	79.96	67.02	57.22	49.60	43.53	34.54	28.27	0.00					
23	1.14	2.23	5.36	10.44	12.43	15.40	20.30	29.96	39.49	58.28	76.82	95.18	113.38	104.43	85.47	71.63	61.16	53.01	46.52	36.92	30.22	0.00					
24	1.19	2.32	5.60	10.89	12.98	16.07	21.19	31.27	41.21	60.82	80.16	99.32	118.31	111.32	91.11	76.35	65.20	56.51	49.60	39.36	32.21	0.00					
25	1.25	2.42	5.83	11.34	13.51	16.74	22.07	32.56	42.93	63.35	83.50	103.46	123.24	118.34	96.87	81.18	69.31	60.07	52.73	41.84	13.70	0.00					
26	1.29	2.51	6.06	11.80	14.06	17.41	22.95	33.87	44.65	65.89	86.84	107.60	128.17	125.52	102.74	86.10	73.51	63.72	55.92	44.38	0.00						
28	1.39	2.71	6.53	12.71	15.14	18.75	24.71	36.48	48.08	70.95	93.53	115.87	138.04	140.27	114.82	96.22	82.15	71.21	62.50	49.60	0.00						
30	1.49	2.90	6.99	13.61	16.22	20.09	26.48	39.08	51.51	76.02	100.21	124.14	147.89	155.57	127.33	106.71	91.11	78.97	69.31	10.22	0.00						
32	1.60	3.09	7.46	14.52	17.30	21.43	28.25	41.68	54.94	81.09	106.89	132.42	157.75	171.38	140.27	117.56	100.37	87.00	76.35	0.00							
35	1.74	3.39	8.17	15.88	18.92	23.44	30.89	45.59	60.10	88.69	116.91	144.84	172.54	196.04	160.45	134.47	114.82	99.52	47.23	0.00							
40	1.99	3.87	9.33	18.15	21.62	26.79	35.31	52.11	68.69	101.37	133.61	165.53	197.19	228.64	196.04	164.29	131.74	32.01	0.00								
45	2.24	4.35	10.50	20.42	24.32	30.13	39.72	58.62	77.27	114.04	150.31	186.22	221.84	257.22	233.92	159.08	37.13	0.00									
	Type I Manual or Drip Lubrication							Type II Bath or Disc Lubrication						Type III Oil Stream Lubrication														

NOTE: The limiting RPM for each lubrication type is shown in the chart's shaded areas directly above the type I, II or III reference. For optimum results, it is suggested that the roller chain manufacturer be given the opportunity to evaluate the operating condition of chains in the shaded (galling range) speed area. The horsepower ratings of multiple-strand chains are greater than those for single strand chain. See table 1 on page 8 for multiple-strand factors.

140 – 44.450 mm (1.750 in.) PITCH KILOWATTS

TABLE 37. 140 – 44.450 mm (1.750 in.) PITCH KILOWATTS

No. of Teeth	Revolutions Per Minute – Small Sprocket																										
	5	10	25	50	53	75	100	150	200	300	400	500	600	700	800	900	1000	1100	1200	1400	1600	1800	2000	2200	2400	2700
11	0.85	1.65	3.97	7.73	8.17	11.39	15.03	22.17	29.22	43.13	56.85	64.73	49.24	39.07	31.98	26.80	22.89	19.84	17.41	13.82	11.30	9.48	8.09	7.01	6.15	0.00
12	0.92	1.80	4.33	8.43	8.91	12.43	16.39	24.19	31.88	47.05	62.02	73.75	56.11	44.52	36.44	30.54	26.08	22.60	19.84	15.74	12.89	10.80	9.22	7.99	0.54	0.00
13	1.00	1.95	4.69	9.13	9.65	13.47	17.76	26.20	34.54	50.98	67.19	83.16	63.26	50.20	41.09	34.44	29.40	25.48	22.36	17.75	14.53	12.18	10.40	9.01	0.00	
14	1.08	2.10	5.06	9.83	10.40	14.50	19.12	28.22	37.20	54.89	72.36	89.64	70.70	56.11	45.92	38.49	32.86	28.48	25.00	19.84	16.23	13.61	11.62	0.00		
15	1.16	2.24	5.41	10.53	11.13	15.54	20.48	30.23	39.85	58.81	77.52	96.04	78.41	62.22	50.92	42.68	36.44	31.59	27.72	22.00	18.01	15.09	12.89	0.00		
16	1.23	2.39	5.77	11.23	11.88	16.58	21.85	32.25	42.50	62.74	82.69	102.44	86.37	68.54	56.11	47.02	40.14	34.79	30.54	24.24	19.84	16.62	0.00			
17	1.30	2.54	6.14	11.93	12.62	17.61	23.21	34.26	45.17	66.66	87.86	108.85	94.60	75.07	61.45	51.49	43.97	38.11	33.44	26.54	21.72	18.20	0.00			
18	1.39	2.69	6.50	12.64	13.36	18.65	24.59	36.28	47.82	70.58	93.03	115.25	103.07	81.79	66.94	56.11	47.90	41.52	36.44	28.92	23.67	0.00				
19	1.46	2.85	6.86	13.34	14.11	19.69	25.95	38.30	50.48	74.50	98.19	121.65	111.77	88.70	72.60	60.84	51.95	45.03	39.52	31.36	25.67	0.00				
20	1.54	3.00	7.22	14.04	14.85	20.72	27.31	40.31	53.13	78.42	103.36	128.06	120.71	95.79	78.41	65.71	56.11	48.63	42.68	33.87	26.71	0.00				
21	1.62	3.15	7.58	14.74	15.59	21.76	28.68	42.33	55.79	82.34	108.53	134.46	129.88	103.07	84.36	70.70	60.36	52.32	45.92	36.44	0.00					
22	1.69	3.30	7.94	15.44	16.33	22.80	30.04	44.35	58.45	86.26	113.70	140.86	139.27	110.52	90.45	75.81	64.73	56.11	49.24	39.07	0.00					
23	1.77	3.45	8.30	16.14	17.08	23.83	31.41	46.36	61.10	90.18	118.86	147.26	148.87	118.14	96.69	81.04	69.19	59.97	52.63	41.77	0.00					
24	1.85	3.59	8.67	16.85	17.82	24.87	32.77	48.37	63.76	94.11	124.03	153.67	158.68	125.93	103.07	86.37	73.75	63.92	56.11	28.26	0.00					
25	1.92	3.74	9.02	17.55	18.56	25.91	34.15	50.39	66.42	98.02	129.21	160.07	168.71	133.88	109.57	91.83	78.41	67.96	59.65	0.00						
26	2.00	3.89	9.38	18.25	19.31	26.94	35.51	52.41	69.07	101.94	134.38	166.47	178.93	141.99	116.22	97.40	83.16	72.08	63.26	0.00						
28	2.16	4.19	10.10	19.66	20.79	29.02	38.24	56.43	74.39	109.79	144.71	179.28	199.97	158.68	129.88	108.85	92.94	80.56	72.05	0.00						
30	2.31	4.49	10.83	21.06	22.27	31.08	40.97	60.47	79.70	117.63	155.05	192.08	221.77	175.99	144.04	120.71	103.07	89.33	13.90	0.00						
32	2.46	4.79	11.55	22.47	23.76	33.15	43.71	64.50	85.02	125.47	165.38	204.89	244.31	193.87	158.68	132.99	100.87	62.58	0.00							
35	2.69	5.24	12.63	24.57	25.99	36.26	47.80	70.54	92.99	137.23	180.88	224.10	266.96	221.77	181.51	152.12	100.87	0.00								
40	3.08	5.99	14.44	28.08	29.70	41.45	54.63	80.63	106.27	156.84	206.72	256.11	305.10	270.95	221.77	114.67	0.00									
45	3.47	6.74	16.24	31.60	33.41	46.63	61.46	90.70	119.55	176.45	232.57	288.12	343.24	323.31	165.05	0.00										
	Type I Manual or Drip Lubrication				Type II Bath or Disc Lubrication							Type III Oil Stream Lubrication														

NOTE: The limiting RPM for each lubrication type is shown in the chart's shaded areas directly above the type I, II or III reference. For optimum results, it is suggested that the roller chain manufacturer be given the opportunity to evaluate the operating condition of chains in the shaded (galling range) speed area. The horsepower ratings of multiple-strand chains are greater than those for single strand chain. See table 1 on page 8 for multiple-strand factors.

160 – 50.800 mm (2.000 in.) PITCH KILOWATTS

TABLE 38. 160 – 50.800 mm (2.000 in.) PITCH KILOWATTS

No. of Teeth	Revolutions Per Minute – Small Sprocket																										
	2	5	10	25	47	50	75	100	150	200	300	400	500	600	700	800	900	1000	1100	1200	1400	1600	1800	2000	2200	2400	
11	0.51	1.23	2.39	5.76	10.56	11.20	16.53	21.80	32.17	42.40	62.57	82.47	72.02	54.79	43.48	35.58	29.82	25.47	22.07	19.37	15.37	12.58	10.54	9.00	7.80	0.00	
12	0.56	1.34	2.61	6.29	11.52	12.22	18.04	23.77	35.09	46.26	68.26	89.98	82.06	62.43	49.54	40.55	33.98	29.02	25.15	22.07	17.52	14.33	12.01	10.26	0.00		
13	0.60	1.45	2.83	6.81	12.48	13.24	19.54	25.76	38.02	50.10	73.95	97.47	92.53	70.39	55.86	45.72	38.31	32.71	28.36	24.88	19.75	16.17	13.55	0.00			
14	0.65	1.57	3.04	7.33	13.44	14.26	21.04	27.74	40.94	53.96	79.64	104.97	103.41	78.67	62.43	51.10	42.83	36.56	31.69	27.81	22.07	18.07	15.14	0.00			
15	0.69	1.68	3.26	7.85	14.40	15.28	22.55	29.72	43.86	57.81	85.33	112.47	114.69	87.25	69.24	56.67	47.49	40.55	35.14	30.85	24.48	20.04	0.00				
16	0.74	1.79	3.47	8.37	15.35	16.29	24.05	31.70	46.79	61.67	91.01	119.97	126.34	96.11	76.27	62.43	52.32	44.67	38.72	33.98	26.96	22.07	0.00				
17	0.79	1.90	3.69	8.90	16.32	17.32	25.56	33.68	49.71	65.52	96.70	127.46	138.37	105.26	83.53	68.37	57.30	48.93	42.41	37.22	29.54	18.05	0.00				
18	0.84	2.01	3.91	9.43	17.28	18.34	27.06	35.67	52.64	69.38	102.39	134.96	150.76	114.69	91.01	74.50	62.43	53.30	46.20	40.55	32.18	0.00					
19	0.88	2.13	4.13	9.95	18.23	19.35	28.56	37.64	55.56	73.24	108.08	142.46	163.49	124.38	98.70	80.78	67.70	57.81	50.10	43.97	34.90	0.00					
20	0.92	2.24	4.35	10.47	19.19	20.37	30.07	39.63	58.49	77.09	113.77	149.96	176.57	134.32	106.60	87.25	73.12	62.43	54.12	47.49	34.89	0.00					
21	0.97	2.35	4.56	10.99	20.16	21.39	31.57	41.61	61.41	80.94	119.46	157.45	189.98	144.52	114.69	93.87	78.67	67.17	58.22	51.10	0.00						
22	1.02	2.45	4.78	11.52	21.12	22.41	33.07	43.59	64.33	84.79	125.15	164.96	203.71	154.97	122.97	100.65	84.35	72.02	62.43	54.79	0.00						
23	1.07	2.57	5.00	12.04	22.07	23.43	34.57	45.57	67.25	88.65	130.83	172.45	213.65	165.66	131.46	107.60	90.17	76.99	66.73	58.57	0.00						
24	1.11	2.68	5.21	12.57	23.03	24.44	36.08	47.55	70.18	92.50	136.52	179.95	222.94	176.57	140.12	114.69	96.11	82.06	71.13	62.43	0.00						
25	1.16	2.79	5.43	13.09	24.00	25.47	37.58	49.54	73.11	96.36	142.21	187.45	232.23	187.72	148.97	121.93	102.18	87.25	75.62	24.35	0.00						
26	1.21	2.90	5.64	13.62	24.95	26.48	39.08	51.51	76.03	100.21	147.90	194.95	241.52	199.10	158.00	129.32	108.37	92.53	80.21	0.00							
28	1.30	3.12	6.08	14.66	26.88	28.52	42.09	55.48	81.88	107.93	159.28	209.94	260.09	222.51	176.57	144.52	121.12	103.41	27.50	0.00							
30	1.39	3.35	6.52	15.70	28.79	30.56	45.10	59.44	87.72	115.63	170.65	224.94	278.68	246.77	195.83	160.28	134.32	94.30	0.00								
32	1.48	3.57	6.95	16.76	30.72	32.59	48.11	63.41	93.58	123.34	182.03	239.94	297.25	271.85	215.73	176.57	147.98	16.84	0.00								
35	1.62	3.91	7.61	18.32	33.59	35.65	52.61	69.35	102.35	134.90	199.09	262.43	325.12	310.96	246.77	201.98	83.97	0.00									
40	1.86	4.47	8.69	20.95	38.39	40.74	60.13	79.25	116.97	154.17	227.54	299.91	371.57	379.93	301.49	119.78	0.00										
45	2.09	5.03	9.78	23.56	43.19	45.83	67.64	89.16	131.59	173.44	255.98	337.41	418.01	453.35	215.58	0.00											
	Type I Manual or Drip Lubrication				Type II Bath or Disc Lubrication							Type III Oil Stream Lubrication															

NOTE: The limiting RPM for each lubrication type is shown in the chart's shaded areas directly above the type I, II or III reference. For optimum results, it is suggested that the roller chain manufacturer be given the opportunity to evaluate the operating condition of chains in the shaded (galling range) speed area. The horsepower ratings of multiple-strand chains are greater than those for single strand chain. See table 1 on page 8 for multiple-strand factors.

180 – 57.150 mm (2.250 in.) PITCH KILOWATTS

TABLE 39. 180 – 57.150 mm (2.250 in.) PITCH KILOWATTS

No. of Teeth	Revolutions Per Minute – Small Sprocket																								
	2	5	10	25	43	50	75	100	150	200	300	400	500	600	700	800	900	1000	1100	1200	1400	1600	1800	2000
11	0.70	1.69	3.30	7.95	13.39	15.47	22.83	30.10	44.41	58.54	86.40	110.60	79.14	60.20	47.78	39.10	32.77	27.98	24.25	21.28	16.89	13.83	11.59	0.00
12	0.77	1.85	3.60	8.67	14.60	16.88	24.91	32.83	48.46	63.86	94.26	124.24	90.17	68.60	54.44	44.56	37.34	31.88	27.64	24.25	19.25	15.75	13.20	0.00
13	0.84	2.01	3.90	9.40	15.82	18.28	26.99	35.57	52.49	69.19	102.11	134.59	101.68	77.34	61.38	50.24	42.10	35.95	31.16	27.34	21.70	17.76	0.00	
14	0.89	2.16	4.20	10.12	17.03	19.69	29.06	38.30	56.53	74.51	109.97	144.94	113.63	86.44	68.60	56.14	47.05	40.17	34.82	30.56	24.25	19.85	0.00	
15	0.96	2.31	4.50	10.84	18.25	21.10	31.13	41.04	60.57	79.83	117.82	155.30	126.02	95.87	76.08	62.27	52.18	44.56	38.62	33.89	26.90	0.00		
16	1.02	2.47	4.80	11.57	19.47	22.51	33.21	43.77	64.61	85.15	125.67	165.65	138.83	105.61	83.81	68.60	57.49	49.08	42.54	37.34	29.63	0.00		
17	1.09	2.62	5.10	12.29	20.69	23.91	35.29	46.51	68.64	90.48	133.53	176.00	152.05	115.67	91.79	75.13	62.96	53.76	46.60	40.89	32.45	0.00		
18	1.15	2.77	5.40	13.01	21.90	25.32	37.36	49.25	72.68	95.80	141.38	186.36	165.66	126.02	100.01	81.86	68.60	58.57	50.77	44.56	0.00			
19	1.22	2.93	5.70	13.74	23.12	26.72	39.44	51.98	76.72	101.12	149.24	196.71	179.65	136.66	108.45	88.77	74.39	63.52	55.06	48.32	0.00			
20	1.28	3.09	6.00	14.46	24.34	28.13	41.51	54.72	80.76	106.44	157.10	207.07	194.02	147.60	117.13	95.87	80.34	68.60	59.46	52.18	0.00			
21	1.34	3.24	6.30	15.18	25.56	29.54	43.59	57.46	84.79	111.77	164.95	217.42	208.75	158.80	126.02	103.15	86.44	73.80	63.97	56.14	0.00			
22	1.41	3.39	6.60	15.91	26.77	30.94	45.67	60.19	88.83	117.09	172.80	227.77	223.84	170.28	135.13	110.60	92.69	79.14	68.60	0.00				
23	1.47	3.55	6.90	16.63	27.99	32.35	47.74	62.92	92.87	122.41	180.66	238.12	239.27	182.03	144.44	118.22	99.08	84.60	73.32	0.00				
24	1.54	3.70	7.20	17.35	29.20	33.75	49.81	65.66	96.90	127.73	188.51	248.47	255.04	194.02	153.96	126.02	105.61	90.17	30.08	0.00				
25	1.60	3.86	7.50	18.08	30.42	35.16	51.89	68.40	100.95	133.06	196.37	258.83	271.15	206.28	163.69	133.98	112.28	95.87	0.00					
26	1.66	4.01	7.80	18.80	31.64	36.57	53.97	71.13	104.98	138.37	204.22	269.18	287.59	218.77	173.61	142.09	119.08	91.30	0.00					
28	1.79	4.32	8.40	20.25	34.07	39.38	58.12	76.61	113.06	149.02	219.93	289.89	321.40	244.49	194.02	158.80	133.09	0.00						
30	1.92	4.62	9.00	21.69	36.50	42.19	62.27	82.08	121.13	159.66	235.64	310.59	356.44	271.15	215.18	176.12	96.14	0.00						
32	2.05	4.94	9.60	23.13	38.94	45.00	66.42	87.55	129.21	170.31	251.35	331.30	392.67	298.71	237.05	194.02	0.00							
35	2.24	5.40	10.50	25.30	42.59	49.22	72.65	95.76	141.33	186.28	274.92	362.36	449.16	341.69	271.15	106.27	0.00							
40	2.56	6.17	12.00	28.92	48.67	56.26	83.03	109.43	161.51	212.88	314.19	414.12	513.06	417.47	189.56	0.00								
45	2.88	6.94	13.50	32.53	54.76	63.29	93.41	123.12	181.70	239.50	353.46	465.89	577.19	357.94	0.00									
	Type I Manual or Drip Lubrication				Type II Bath or Disc Lubrication							Type III Oil Stream Lubrication												

NOTE: The limiting RPM for each lubrication type is shown in the chart's shaded areas directly above the type I, II or III reference. For optimum results, it is suggested that the roller chain manufacturer be given the opportunity to evaluate the operating condition of chains in the shaded (galling range) speed area. The horsepower ratings of multiple-strand chains are greater than those for single strand chain. See table 1 on page 8 for multiple-strand factors.

200 – 63.500 mm (2.500 in.) PITCH KILOWATTS

TABLE 40. 200 – 63.500 mm (2.500 in.) PITCH KILOWATTS

No. of Teeth	Revolutions Per Minute – Small Sprocket																							
	2	5	10	25	40	50	75	100	150	200	250	300	400	500	600	700	800	900	1000	1100	1200	1400	1600	1800
11	0.93	2.25	4.38	10.56	16.58	20.54	30.31	39.95	58.97	77.73	96.30	114.72	120.33	86.10	65.49	51.98	42.54	35.65	30.44	26.38	23.15	18.37	15.04	0.00
12	1.02	2.45	4.78	11.52	18.08	22.41	33.07	43.59	64.33	84.79	105.05	125.14	137.10	98.10	74.63	59.22	48.47	40.63	34.68	30.07	26.38	20.94	17.14	0.00
13	1.10	2.66	5.18	12.48	19.60	24.27	35.82	47.23	69.69	91.86	113.81	135.58	154.59	110.62	84.15	66.78	54.66	45.81	39.11	33.90	29.75	23.61	0.00	
14	1.19	2.86	5.58	13.44	21.10	26.14	38.58	50.86	75.05	98.92	122.56	146.00	172.77	123.62	94.04	74.63	61.08	51.19	43.71	37.88	33.25	26.38	0.00	
15	1.28	3.07	5.97	14.40	22.61	28.01	41.33	54.49	80.42	105.99	131.31	156.43	191.61	137.10	104.30	82.77	67.75	56.77	48.47	42.01	36.87	27.93	0.00	
16	1.36	3.27	6.38	15.36	24.12	29.87	44.09	58.12	85.78	113.06	140.06	166.86	211.09	151.04	114.90	91.18	74.63	62.54	53.40	46.29	40.63	0.00		
17	1.45	3.48	6.77	16.32	25.62	31.74	46.85	61.75	91.14	120.12	148.82	177.29	231.18	165.42	125.84	99.86	81.74	68.50	58.49	50.69	44.49	0.00		
18	1.53	3.68	7.17	17.28	27.13	33.61	49.60	65.38	96.50	127.19	157.57	187.72	247.43	180.23	137.10	108.80	89.05	74.63	63.72	55.23	48.47			
19	1.61	3.89	7.57	18.24	28.63	35.48	52.36	69.01	101.86	134.26	166.33	198.15	261.17	195.46	148.69	117.99	96.58	80.93	69.10	59.89	1.66			
20	1.70	4.09	7.96	19.19	30.14	37.34	55.11	72.65	107.22	141.33	175.08	208.57	274.92	211.09	160.58	127.43	104.30	87.40	74.63	64.69	0.00			
21	1.78	4.30	8.37	20.16	31.65	39.22	57.87	76.28	112.58	148.39	183.84	219.00	288.67	227.11	172.77	137.10	112.22	94.04	80.30	24.37	0.00			
22	1.87	4.50	8.76	21.12	33.16	41.08	60.63	79.92	117.94	155.46	192.59	229.44	302.41	243.52	185.25	147.01	120.33	100.84	86.10	0.00				
23	1.95	4.71	9.16	22.08	34.67	42.94	63.38	83.55	123.30	162.53	201.35	239.86	316.15	260.32	198.03	157.15	128.63	107.79	77.91	0.00				
24	2.04	4.91	9.56	23.03	36.17	44.82	66.14	87.18	128.66	169.59	210.10	250.29	329.91	277.47	211.09	167.51	137.10	114.90	16.19	0.00				
25	2.13	5.12	9.96	24.00	37.68	46.68	68.90	90.81	134.02	176.66	218.86	260.72	343.65	295.00	224.41	178.09	145.76	122.15	0.00					
26	2.21	5.32	10.36	24.96	39.19	48.55	71.65	94.44	139.39	183.72	227.61	271.15	357.39	312.87	238.01	188.88	154.59	112.71	0.00					
	Type I Manual or Drip Lubrication				Type II Bath or Disc Lubrication								Type III Oil Stream Lubrication											

NOTE: The limiting RPM for each lubrication type is shown in the chart's shaded areas directly above the type I, II or III reference. For optimum results, it is suggested that the roller chain manufacturer be given the opportunity to evaluate the operating condition of chains in the shaded (galling range) speed area. The horsepower ratings of multiple-strand chains are greater than those for single strand chain. See table 1 on page 8 for multiple-strand factors.

240 – 76.200 mm (3.000 in.) PITCH KILOWATTS

TABLE 41. 240 – 76.200 mm (3.000 in.) PITCH KILOWATTS

No. of Teeth	Revolutions Per Minute – Small Sprocket																							
	2	5	10	25	36	50	75	100	150	200	250	300	400	500	600	700	800	900	1000	1100	1200	1300	1400	1500
11	1.51	3.62	7.05	17.01	24.13	33.08	48.82	64.35	94.98	125.19	155.10	184.76	139.22	99.62	75.79	60.14	49.22	41.25	35.22	30.53	26.79	23.77	21.26	0.00
12	1.64	3.96	7.70	18.55	26.33	36.09	53.27	70.21	103.62	136.57	169.19	201.56	158.63	113.51	86.35	68.52	56.08	47.00	40.13	34.79	30.53	27.08	1.57	0.00
13	1.78	4.29	8.34	20.10	28.52	39.10	57.70	76.05	112.25	147.95	183.29	218.36	178.87	127.99	97.37	77.26	63.24	53.00	45.25	39.22	34.42	28.43	0.00	
14	1.92	4.62	8.98	21.64	30.72	42.10	62.14	81.91	120.89	159.33	197.39	235.15	199.90	143.04	108.81	86.35	70.68	59.23	50.57	43.83	38.47	0.00		
15	2.05	4.94	9.62	23.19	32.91	45.11	66.58	87.75	129.51	170.71	211.50	251.95	221.70	158.63	120.68	95.76	78.38	65.69	56.08	48.61	0.00			
16	2.19	5.28	10.26	24.73	35.11	48.12	71.02	93.61	138.15	182.09	225.60	268.74	244.23	174.75	132.94	105.49	86.35	72.36	61.79	53.56	0.00			
17	2.33	5.61	10.90	26.28	37.30	51.13	75.46	99.45	146.78	193.47	239.69	285.54	267.48	191.39	145.60	115.54	94.57	79.25	67.66	0.00				
18	2.46	5.94	11.54	27.83	39.49	54.13	79.89	105.31	155.42	204.85	253.79	302.34	291.43	208.53	158.63	125.88	103.03	86.35	73.73	0.00				
19	2.60	6.26	12.18	29.37	41.68	57.14	84.33	111.15	164.05	216.24	267.89	319.14	316.04	226.14	172.03	136.52	111.74	93.65	2.39	0.00				
20	2.74	6.59	12.83	30.92	43.88	60.15	88.77	117.01	172.69	227.62	281.99	335.93	341.32	244.23	185.79	147.44	120.68	101.13	0.00					
21	2.87	6.93	13.47	32.47	46.08	63.15	93.21	122.86	181.32	239.00	296.10	352.73	367.24	262.78	199.90	158.63	129.84	81.92	0.00					
22	3.01	7.26	14.12	34.01	48.27	66.17	97.65	128.71	189.96	250.38	310.19	369.52	393.78	281.76	214.34	170.09	139.22	0.00						
23	3.15	7.58	14.76	35.55	50.46	69.17	102.09	134.56	198.59	261.76	324.29	386.32	420.93	301.20	229.12	181.82	148.82	0.00						
24	3.28	7.91	15.40	37.11	52.65	72.18	106.52	140.41	207.22	273.14	338.39	403.12	448.68	321.05	244.23	193.81	140.42	0.00						
25	3.42	8.25	16.04	38.65	54.85	75.19	110.97	146.26	215.86	284.52	352.49	419.92	477.01	341.32	259.65	206.05	54.79	0.00						
26	3.56	8.58	16.68	40.19	57.05	78.19	115.40	152.11	224.49	295.90	366.59	436.71	505.92	362.01	275.39	218.53	0.00							
	Type I Manual or Drip Lubrication				Type II Bath or Disc Lubrication								Type III Oil Stream Lubrication											

NOTE: The limiting RPM for each lubrication type is shown in the chart's shaded areas directly above the type I, II or III reference. For optimum results, it is suggested that the roller chain manufacturer be given the opportunity to evaluate the operating condition of chains in the shaded (galling range) speed area. The horsepower ratings of multiple-strand chains are greater than those for single strand chain. See table 1 on page 8 for multiple-strand factors.

ROLLER CHAIN DIMENSIONS AND HORSEPOWER TABLES – METRIC • HEAVY SERIES

HEAVY SERIES 60H – 19.050 mm (0.750 in.) PITCH KILOWATTS

TABLE 42. KILOWATTS RATINGS – SINGLE STRAND ROLLER CHAIN NO. 60H

No. of Teeth	Speed, min-1, Small Sprocket																												
	10	25	50	90	100	200	300	400	500	600	700	800	900	1000	1100	1200	1400	1600	1800	2000	2500	3000	3500	4000	4500	5000	5500	6000
11	0.16	0.39	0.76	1.34	1.48	2.89	4.26	5.62	6.96	8.29	9.61	10.93	12.24	11.62	10.07	8.84	7.01	5.74	4.81	4.11	2.94	2.24	1.77	1.45	1.22	1.04	0.90	0.00	
12	0.18	0.43	0.83	1.46	1.62	3.15	4.65	6.13	7.59	9.05	10.49	11.92	13.35	13.24	11.47	10.07	7.99	6.54	5.48	4.68	3.35	2.55	2.02	1.65	1.39	1.18	0.00		
13	0.19	0.46	0.90	1.59	1.75	3.41	5.04	6.64	8.23	9.80	11.36	12.92	14.46	14.93	12.94	11.36	9.01	7.38	6.18	5.28	3.78	2.87	2.28	1.87	1.56	1.34	0.00		
14	0.21	0.50	0.97	1.71	1.89	3.68	5.42	7.15	8.86	10.55	12.24	13.91	15.58	16.68	14.46	12.69	10.07	8.24	6.91	5.90	4.22	3.21	2.55	2.09	1.75	0.00			
15	0.22	0.53	1.04	1.83	2.02	3.94	5.81	7.66	9.49	11.31	13.11	14.90	16.69	18.46	16.04	14.07	11.17	9.14	7.66	6.54	4.68	3.56	2.83	2.31	1.94	0.00			
16	0.24	0.57	1.11	1.95	2.16	4.20	6.20	8.17	10.12	12.06	13.98	15.90	17.80	19.69	17.67	15.50	12.30	10.07	8.44	7.21	5.16	3.92	3.11	2.55	0.00				
17	0.25	0.61	1.18	2.07	2.29	4.46	6.59	8.68	10.76	12.81	14.86	16.89	18.91	20.93	19.35	16.98	13.48	11.03	9.24	7.89	5.65	4.30	3.41	2.79	0.00				
18	0.27	0.64	1.25	2.20	2.43	4.73	6.97	9.19	11.39	13.57	15.73	17.88	20.03	22.16	21.08	18.50	14.68	12.02	10.07	8.60	6.15	4.68	3.71	0.79	0.00				
19	0.28	0.68	1.32	2.32	2.56	4.99	7.36	9.70	12.02	14.32	16.61	18.88	21.14	23.39	22.86	20.06	15.92	13.03	10.92	9.32	6.67	5.08	4.03	0.00					
20	0.30	0.71	1.39	2.44	2.70	5.25	7.75	10.21	12.66	15.08	17.48	19.87	22.25	24.62	24.69	21.67	17.20	14.07	11.80	10.07	7.21	5.48	4.35	0.00					
21	0.31	0.75	1.46	2.56	2.83	5.51	8.14	10.73	13.29	15.83	18.35	20.86	23.36	25.85	26.56	23.31	18.50	15.14	12.69	10.84	7.75	5.90	3.63	0.00					
22	0.33	0.78	1.53	2.68	2.97	5.78	8.52	11.24	13.92	16.58	19.23	21.86	24.48	27.08	28.48	25.00	19.84	16.24	13.61	11.62	8.31	6.32	0.00						
23	0.34	0.82	1.60	2.81	3.10	6.04	8.91	11.75	14.55	17.34	20.10	22.85	25.59	28.31	30.45	26.72	21.21	17.36	14.55	12.42	8.89	6.76	0.00						
24	0.36	0.86	1.67	2.93	3.24	6.30	9.30	12.26	15.19	18.09	20.98	23.85	26.70	29.54	32.37	28.48	22.60	18.50	15.50	13.24	9.47	7.21	0.00						
25	0.37	0.89	1.73	3.05	3.37	6.56	9.69	12.77	15.82	18.84	21.85	24.84	27.81	30.77	33.72	30.28	24.03	19.67	16.48	14.07	10.07	7.66	0.00						
26	0.38	0.93	1.80	3.17	3.51	6.83	10.07	13.28	16.45	19.60	22.72	25.83	28.93	32.00	35.07	32.12	25.49	20.86	17.48	14.93	10.68	3.11	0.00						
28	0.41	1.00	1.94	3.42	3.78	7.35	10.85	14.30	17.72	21.11	24.47	27.82	55.26	34.47	37.77	35.89	28.48	23.31	19.54	16.68	11.94	0.00							
30	0.44	1.07	2.08	3.66	4.05	7.88	11.62	15.32	18.98	22.61	26.22	29.81	61.29	36.93	40.47	39.81	31.59	25.86	21.67	18.50	13.24	0.00							
32	0.47	1.14	2.22	3.90	4.32	8.40	12.40	16.34	20.25	24.12	27.97	31.79	35.60	39.39	43.16	43.85	34.80	28.48	23.87	20.38	8.54	0.00							
35	0.52	1.25	2.43	4.27	4.72	9.19	13.56	17.88	22.15	26.38	30.59	34.77	38.94	43.08	47.21	50.16	39.81	32.58	27.31	23.31	0.00								
40	0.59	1.43	2.78	4.88	5.40	10.50	15.50	20.43	25.31	30.15	34.96	39.74	44.50	49.24	53.95	58.65	48.64	39.81	33.36	22.11	0.00								
45	0.67	1.60	3.12	5.49	6.07	11.81	17.44	22.98	28.47	33.92	39.33	44.71	50.06	55.39	60.70	65.99	58.03	47.50	27.59	0.00									
	Type I Manual or Drip Lubrication				Type II Bath or Disc Lubrication								Type III Oil Stream Lubrication																

NOTE: The limiting RPM for each lubrication type is shown in the chart's shaded areas directly above the type I, II or III reference. For optimum results, it is suggested that the roller chain manufacturer be given the opportunity to evaluate the operating condition of chains in the shaded (galling range) speed area. The horsepower ratings of multiple-strand chains are greater than those for single strand chain. See table 1 on page 8 for multiple-strand factors.

HEAVY SERIES 80H – 25.400 mm (1.000 in.) PITCH KILOWATTS

TABLE 43. KILOWATTS RATINGS – SINGLE STRAND ROLLER CHAIN NO. 80H

No. of Teeth	Speed, min-1, Small Sprocket																												
	10	25	50	70	100	150	200	300	400	500	600	700	800	900	1000	1100	1200	1400	1600	1800	2000	2200	2400	2700	3000	3300	3600	4000	4500
11	0.37	0.89	1.72	2.38	3.35	4.95	6.52	9.63	12.69	15.72	18.73	21.72	20.44	17.13	14.63	12.68	11.13	8.83	7.23	6.06	5.17	4.48	3.93	3.30	2.81	2.44	2.14	1.83	0.00
12	0.40	0.97	1.88	2.60	3.66	5.40	7.12	10.50	13.84	17.15	20.43	23.69	23.29	19.52	16.66	14.44	12.68	10.06	8.23	6.90	5.89	5.11	4.48	3.76	3.21	2.78	2.44	2.08	0.00
13	0.43	1.05	2.04	2.81	3.96	5.85	7.71	11.38	15.00	18.58	22.14	25.67	26.26	22.01	18.79	16.29	14.29	11.34	9.28	7.78	6.64	5.76	5.05	4.24	3.62	3.13	2.75	0.00	
14	0.47	1.13	2.19	3.03	4.27	6.30	8.30	12.25	16.15	20.01	23.84	27.64	29.35	24.59	21.00	18.20	15.97	12.68	10.38	8.70	7.42	6.44	5.65	4.73	4.04	3.50	1.51	0.00	
15	0.50	1.21	2.35	3.25	4.57	6.75	8.90	13.13	17.31	21.44	25.54	29.61	32.55	27.28	23.29	20.19	17.72	14.06	11.51	9.64	8.23	7.14	6.26	5.25	4.48	3.88	0.00		
16	0.53	1.29	2.51	3.46	4.88	7.20	9.49	14.00	18.46	22.87	27.24	31.59	35.86	30.05	25.66	22.24	19.52	15.49	12.68	10.62	9.07	7.86	6.90	5.78	4.94	0.00			
17	0.57	1.37	2.66	3.68	5.18	7.65	10.08	14.88	19.61	24.30	28.95	33.56	38.15	32.91	28.10	24.36	21.38	16.96	13.88	11.64	9.93	8.61	7.56	6.33	5.41	0.00			
18	0.60	1.45	2.82	3.90	5.49	8.10	10.68	15.76	20.77	25.73	30.65	35.54	40.40	35.86	30.61	26.54	23.29	18.48	15.13	12.68	10.82	9.38	8.23	6.90	1.40	0.00			
19	0.64	1.53	2.98	4.11	5.79	8.55	11.27	16.63	21.92	27.16	32.35	37.51	42.64	38.88	33.20	28.78	25.26	20.04	16.40	13.75	11.74	10.17	8.93	7.48	0.00				
20	0.67	1.61	3.13	4.33	6.10	9.00	11.86	17.51	23.07	28.59	34.05	39.49	44.89	41.99	35.86	31.08	27.28	21.65	17.72	14.85	12.68	10.99	9.64	8.08	0.00				
21	0.70	1.69	3.29	4.55	6.40	9.45	12.45	18.38	24.23	30.02	35.76	41.46	47.13	45.18	38.58	33.44	29.35	23.29	19.06	15.97	13.64	11.82	10.38	0.00					
22	0.74	1.77	3.45	4.76	6.71	9.90	13.05	19.26	25.38	31.45	37.46	43.43	49.38	48.45	41.37	35.86	31.47	24.97	20.44	17.13	14.63	12.68	11.13	0.00					
23	0.77	1.85	3.60	4.98	7.01	10.35	13.64	20.13	26.54	32.87	39.16	45.41	51.62	51.79	44.22	38.33	33.64	26.69	21.85	18.31	15.63	13.55	11.89	0.00					
24	0.80	1.93	3.76	5.20	7.32	10.80	14.23	21.01	27.69	34.30	40.87	47.38	53.86	55.20	47.13	40.85	35.86	28.45	23.29	19.52	16.66	14.44	4.06	0.00					
25	0.84	2.01	3.92	5.41	7.62	11.25	14.83	21.88	28.84	35.73	42.57	49.36	56.11	58.69	50.11	43.43	38.12	30.25	24.76	20.75	17.72	15.36	0.00						
26	0.87	2.09	4.07	5.63	7.93	11.70	15.42	22.76	30.00	37.16	44.27	51.33	58.35	62.25	53.15	46.07	40.43	32.08	26.26	22.01	18.79	12.51	0.00						
28	0.94	2.26	4.39	6.06	8.54	12.60	16.61	24.51	32.30	40.02	47.68	55.28	62.84	69.56	59.40	51.48	45.18	35.86	29.35	24.59	21.00	0.00							
30	1.00	2.42	4.70	6.49	9.15	13.50	17.79	26.26	34.61	42.88	51.08	59.23	67.33	75.39	65.87	57.10	50.11	39.77	32.55	27.28	9.14	0.00							
32	1.07	2.58	5.02	6.93	9.76	14.40	18.98	28.01	36.92	45.74	54.49	63.18	71.82	80.42	72.57	62.90	55.20	43.81	35.86	29.40	0.00								
35	1.17	2.82	5.49	7.58	10.67	15.75	20.76	30.64	40.38	50.03	59.60	69.10	78.55	87.96	83.01	71.95	63.15	50.11	41.01	4.16	0.00								
40	1.34	3.22	6.27	8.66	12.20	18.00	23.72	35.01	46.15	57.17	68.11	78.97	89.77	100.52	101.42	87.91	77.15	61.22	10.71	0.00									
45	1.50	3.63	7.05	9.74	13.72	20.25	26.69	39.39	51.92	64.32	76.62	88.84	101.00	113.09	121.01	104.89	92.06	32.25	0.00										
	Type I Manual or Drip Lubrication				Type II Bath or Disc Lubrication							Type III Oil Stream Lubrication																	

NOTE: The limiting RPM for each lubrication type is shown in the chart's shaded areas directly above the type I, II or III reference. For optimum results, it is suggested that the roller chain manufacturer be given the opportunity to evaluate the operating condition of chains in the shaded (galling range) speed area. The horsepower ratings of multiple-strand chains are greater than those for single strand chain. See table 1 on page 8 for multiple-strand factors.

HEAVY SERIES 100H – 31.750 mm (1.250 in.) PITCH KILOWATTS

TABLE 44. KILOWATTS RATINGS – SINGLE STRAND ROLLER CHAIN NO. 100H

No. of Teeth	Speed, min-1, Small Sprocket																												
	5	10	25	50	58	75	100	200	300	400	500	600	700	800	900	1000	1100	1200	1400	1600	1800	2000	2200	2400	2700	3000	3300	3600
11	0.36	0.69	1.66	3.24	3.73	4.78	6.30	12.25	18.08	23.84	29.53	35.18	29.85	24.43	20.48	17.48	15.15	13.30	10.55	8.64	7.24	6.18	5.36	4.70	3.94	3.36	2.92	0.00
12	0.39	0.75	1.82	3.53	4.07	5.21	6.87	13.37	19.73	26.00	32.21	38.38	34.01	27.84	23.33	19.92	17.27	15.15	12.03	9.84	8.25	7.04	6.10	5.36	4.49	3.83	0.00	
13	0.42	0.82	1.97	3.83	4.41	5.65	7.44	14.48	21.37	28.17	34.90	41.57	38.35	31.39	26.31	22.46	19.47	17.09	13.56	11.10	9.30	7.94	6.88	6.04	5.06	4.32	0.00	
14	0.45	0.88	2.12	4.12	4.75	6.08	8.02	15.59	23.02	30.34	37.58	44.77	42.86	35.08	29.40	25.10	21.76	19.10	15.15	12.40	10.39	8.88	7.69	6.75	5.66	0.00		
15	0.48	0.94	2.27	4.42	5.09	6.52	8.59	16.71	24.66	32.50	40.27	47.97	47.54	38.91	32.61	27.84	24.13	21.18	16.81	13.76	11.53	9.84	8.53	7.49	6.28	0.00		
16	0.52	1.00	2.42	4.71	5.43	6.95	9.16	17.82	26.30	34.67	42.95	51.17	52.37	42.86	35.92	30.67	26.58	23.33	18.52	15.15	12.70	10.84	9.40	8.25	0.00			
17	0.55	1.07	2.57	5.00	5.77	7.39	9.73	18.94	27.95	36.84	45.64	54.37	57.35	46.94	39.34	33.59	29.12	25.55	20.28	16.60	13.91	11.88	10.29	9.03	0.00			
18	0.58	1.13	2.72	5.30	6.11	7.82	10.31	20.05	29.59	39.00	48.32	57.57	62.49	51.15	42.86	36.60	31.72	27.84	22.09	18.08	15.15	12.94	11.22	2.19	0.00			
19	0.61	1.19	2.87	5.59	6.45	8.25	10.88	21.16	31.24	41.17	51.01	60.76	67.77	55.47	46.48	39.69	34.40	30.19	23.96	19.61	16.43	14.03	12.16	0.00				
20	0.65	1.26	3.03	5.89	6.79	8.69	11.45	22.28	32.88	43.34	53.69	63.96	73.19	59.90	50.20	42.86	37.15	32.61	25.88	21.18	17.75	15.15	5.79	0.00				
21	0.68	1.32	3.18	6.18	7.13	9.12	12.02	23.39	34.52	45.50	56.38	67.16	77.87	64.45	54.01	46.12	39.97	35.08	27.84	22.79	19.10	16.31	0.00					
22	0.71	1.38	3.33	6.48	7.47	9.56	12.60	24.51	36.17	47.67	59.06	70.36	81.58	69.11	57.92	49.45	42.86	37.62	29.85	24.43	20.48	16.16	0.00					
23	0.74	1.44	3.48	6.77	7.81	9.99	13.17	25.62	37.81	49.84	61.74	73.56	85.29	73.88	61.91	52.86	45.82	40.21	31.91	26.12	21.89	2.19	0.00					
24	0.77	1.51	3.63	7.06	8.15	10.43	13.74	26.73	39.46	52.01	64.43	76.75	89.00	78.74	65.99	56.35	48.84	42.86	34.01	27.84	23.33	0.00						
25	0.81	1.57	3.78	7.36	8.49	10.86	14.32	27.85	41.10	54.17	67.11	79.95	92.70	83.72	70.16	59.90	51.92	45.57	36.16	29.60	22.13	0.00						
26	0.84	1.63	3.93	7.65	8.83	11.30	14.89	28.96	42.74	56.34	69.80	83.15	96.41	88.79	74.41	63.53	55.07	48.33	38.35	31.39	8.64	0.00						
28	0.90	1.76	4.24	8.24	9.50	12.16	16.03	31.19	46.03	60.67	75.17	89.55	103.83	99.23	83.16	71.00	61.54	54.01	42.86	35.08	0.00							
30	0.97	1.88	4.54	8.83	10.18	13.03	17.18	33.42	49.32	65.01	80.54	95.94	111.24	110.05	92.23	78.74	68.25	59.90	47.54	14.29	0.00							
32	1.03	2.01	4.84	9.42	10.86	13.90	18.32	35.65	52.61	69.34	85.91	102.34	118.66	121.24	101.60	86.75	75.19	65.99	52.37	0.00								
35	1.13	2.20	5.30	10.30	11.88	15.21	20.04	38.99	57.54	75.84	93.96	111.93	129.78	138.68	116.22	99.23	86.01	75.49	25.16	0.00								
40	1.29	2.51	6.05	11.77	13.58	17.38	22.90	44.56	65.76	86.68	107.38	127.92	148.33	168.61	141.99	121.24	105.09	61.42	0.00									
45	1.45	2.83	6.81	13.25	15.27	19.55	25.77	50.13	73.98	97.51	120.81	143.91	166.87	189.69	169.43	144.66	63.76	0.00										
	Type I Manual or Drip Lubrication							Type II Bath or Disc Lubrication				Type III Oil Stream Lubrication																	

NOTE: The limiting RPM for each lubrication type is shown in the chart's shaded areas directly above the type I, II or III reference. For optimum results, it is suggested that the roller chain manufacturer be given the opportunity to evaluate the operating condition of chains in the shaded (galling range) speed area. The horsepower ratings of multiple-strand chains are greater than those for single strand chain. See table 1 on page 8 for multiple-strand factors.

HEAVY SERIES 120H – 38.100 mm (1.500 in.) PITCH KILOWATTS

TABLE 45. KILOWATTS RATINGS – SINGLE STRAND ROLLER CHAIN NO. 120H

No. of Teeth	Speed, min-1, Small Sprocket																										
	5	10	25	50	75	100	150	200	300	400	500	600	700	800	900	1000	1100	1200	1400	1600	1800	2000	2200	2400	2700	3000
11	0.59	1.15	2.77	5.39	7.96	10.49	15.48	20.40	30.11	39.69	49.17	43.53	34.54	28.27	23.69	20.23	17.53	15.39	12.21	10.00	8.38	7.15	6.20	5.44	4.56	0.00
12	0.64	1.25	3.02	5.88	8.68	11.44	16.88	22.26	32.85	43.29	53.64	49.59	39.36	32.21	27.00	23.05	19.98	17.53	13.91	11.39	9.54	8.15	7.06	6.20	0.79	0.00
13	0.70	1.36	3.28	6.37	9.40	12.39	18.29	24.11	35.58	46.90	58.11	55.92	44.38	36.32	30.44	25.99	22.53	19.77	15.69	12.84	10.76	9.19	7.96	6.99	0.00	
14	0.75	1.46	3.53	6.86	10.13	13.35	19.70	25.96	38.32	50.51	62.58	62.50	49.59	40.59	34.02	29.05	25.18	22.10	17.53	14.35	12.03	10.27	8.90	3.39	0.00	
15	0.81	1.57	3.78	7.35	10.85	14.30	21.11	27.82	41.06	54.12	67.05	69.31	55.00	45.02	37.73	32.21	27.92	24.50	19.45	15.92	13.34	11.39	9.87	0.00		
16	0.86	1.67	4.03	7.84	11.57	15.25	22.51	29.67	43.80	57.73	71.52	76.36	60.59	49.59	41.56	35.49	30.76	27.00	21.42	17.53	14.69	12.55	0.00			
17	0.91	1.78	4.28	8.33	12.30	16.21	23.92	31.53	46.53	61.33	75.99	83.62	66.36	54.32	45.52	38.87	33.69	29.57	23.46	19.20	16.09	13.74	0.00			
18	0.97	1.88	4.53	8.82	13.02	17.16	25.33	33.38	49.27	64.94	80.46	91.11	72.30	59.18	49.59	42.34	36.70	32.21	25.56	20.92	17.53	3.15	0.00			
19	1.02	1.99	4.79	9.31	13.74	18.11	26.73	35.24	52.01	68.55	84.92	98.81	78.41	64.18	53.78	45.92	39.80	34.93	27.72	22.69	19.02	0.00				
20	1.07	2.09	5.04	9.80	14.47	19.07	28.14	37.09	54.74	72.16	89.39	106.49	84.68	69.31	58.09	49.59	42.99	37.73	29.94	24.50	18.33	0.00				
21	1.13	2.20	5.29	10.29	15.19	20.02	29.55	38.95	57.48	75.76	93.86	111.82	91.11	74.57	62.50	53.36	46.25	40.59	32.21	26.37	0.00					
22	1.18	2.30	5.54	10.78	15.91	20.97	30.96	40.80	60.22	79.37	98.33	117.14	97.70	79.96	67.01	57.22	49.59	43.53	34.54	28.27	0.00					
23	1.24	2.40	5.79	11.27	16.64	21.93	32.36	42.66	62.96	82.98	102.80	122.47	104.43	85.48	71.63	61.16	53.01	46.53	36.92	28.62	0.00					
24	1.29	2.51	6.05	11.76	17.36	22.88	33.77	44.51	65.69	86.59	107.27	127.79	111.32	91.11	76.36	65.19	56.51	49.59	39.36	9.13	0.00					
25	1.34	2.61	6.30	12.25	18.08	23.83	35.18	46.37	68.43	90.20	111.74	133.12	118.34	96.86	81.18	69.31	60.08	52.73	41.84	0.00						
26	1.40	2.72	6.55	12.74	18.81	24.79	36.58	48.22	71.17	93.80	116.21	138.44	125.52	102.73	86.10	73.51	63.72	55.92	44.38	0.00						
28	1.50	2.93	7.05	13.72	20.25	26.69	39.40	51.93	76.64	101.02	125.15	149.09	140.27	114.81	96.22	82.15	71.21	62.50	22.63	0.00						
30	1.61	3.14	7.56	14.70	21.70	28.60	42.21	55.64	82.12	108.24	134.09	159.74	155.57	127.33	106.71	91.11	78.97	69.31	0.00							
32	1.72	3.35	8.06	15.68	23.15	30.51	45.03	59.35	87.59	115.45	143.03	170.39	171.38	140.27	117.56	100.37	87.00	66.15	0.00							
35	1.88	3.66	8.82	17.15	25.32	33.37	49.25	64.91	95.80	126.27	156.44	186.36	196.04	160.45	134.47	114.81	99.52	9.35	0.00							
40	2.15	4.18	10.08	19.60	28.93	38.14	56.28	74.19	109.49	144.31	178.79	212.99	239.51	196.04	164.29	88.45	0.00									
45	2.42	4.70	11.34	22.05	32.55	42.90	63.32	83.46	123.17	162.35	201.14	239.61	277.83	208.04	110.39	0.00										
	Type I Manual or Drip Lubrication							Type II Bath or Disc Lubrication				Type III Oil Stream Lubrication															

NOTE: The limiting RPM for each lubrication type is shown in the chart's shaded areas directly above the type I, II or III reference. For optimum results, it is suggested that the roller chain manufacturer be given the opportunity to evaluate the operating condition of chains in the shaded (galling range) speed area. The horsepower ratings of multiple-strand chains are greater than those for single strand chain. See table 1 on page 8 for multiple-strand factors.

HEAVY SERIES 140H – 44.450 mm (1.750 in.) PITCH KILOWATTS

TABLE 46. KILOWATTS RATINGS – SINGLE STRAND ROLLER CHAIN NO. 140H

No. of Teeth	Speed, min-1, Small Sprocket																										
	5	10	25	44	50	75	100	150	200	300	400	500	600	700	800	900	1000	1100	1200	1400	1600	1800	2000	2200	2400	2700
11	0.91	1.76	4.24	7.30	8.26	12.18	16.06	23.70	31.24	46.11	60.78	64.73	49.24	39.07	31.98	26.80	22.88	19.84	17.41	13.81	11.31	9.48	8.09	7.01	6.15	0.00
12	0.99	1.92	4.63	7.97	9.01	13.29	17.52	25.86	34.08	50.30	66.30	73.75	56.10	44.52	36.44	30.54	26.07	22.60	19.84	15.74	12.88	10.80	9.22	7.99	0.00	
13	0.74	1.43	3.45	5.94	6.72	9.91	13.07	19.28	25.42	37.51	49.44	55.00	41.84	33.20	27.17	22.77	19.44	16.85	14.79	11.74	9.61	8.05	6.87	5.96		
14	1.15	2.24	5.40	9.29	10.51	15.51	20.44	30.17	39.76	58.69	77.35	92.94	70.70	56.10	45.92	38.48	32.86	28.48	25.00	19.84	16.24	13.61	11.62	0.00		
15	1.23	2.40	5.79	9.96	11.26	16.62	21.90	32.32	42.60	62.88	82.88	102.68	78.41	62.22	50.93	42.68	36.44	31.59	27.72	22.00	18.01	15.09	0.00			
16	1.32	2.56	6.17	10.62	12.01	17.72	23.36	34.48	45.44	67.07	88.40	109.52	86.38	68.55	56.10	47.02	40.14	34.80	30.54	24.23	19.84	16.62	0.00			
17	1.40	2.72	6.56	11.29	12.76	18.83	24.82	36.63	48.28	71.26	93.93	116.37	94.60	75.07	61.44	51.49	43.97	38.11	33.45	26.54	21.72	0.00				
18	1.48	2.88	6.94	11.95	13.51	19.94	26.28	38.79	51.13	75.45	99.45	123.21	103.07	81.79	66.94	56.10	47.90	41.52	36.44	28.92	23.67	0.00				
19	1.56	3.04	7.33	12.61	14.26	21.05	27.74	40.94	53.97	79.65	104.98	130.06	111.78	88.70	72.60	60.84	51.95	45.03	39.52	31.36	25.67	0.00				
20	1.65	3.20	7.72	13.28	15.01	22.15	29.20	43.10	56.81	83.84	110.50	136.90	120.72	95.79	78.41	65.71	56.10	48.63	42.68	33.87	0.00					
21	1.73	3.36	8.10	13.94	15.76	23.26	30.66	45.25	59.65	88.03	116.03	143.75	129.88	103.07	84.36	70.70	60.36	52.32	45.92	36.44	0.00					
22	1.81	3.52	8.49	14.61	16.51	24.37	32.12	47.41	62.49	92.22	121.56	150.59	139.27	110.52	90.46	75.81	64.73	56.10	49.24	39.07	0.00					
23	1.89	3.68	8.87	15.27	17.26	25.48	33.58	49.56	65.33	96.41	127.08	157.44	148.87	118.14	96.69	81.03	69.19	59.97	52.63	21.98	0.00					
24	1.98	3.84	9.26	15.93	18.01	26.59	35.04	51.72	68.17	100.61	132.61	164.28	158.68	125.93	103.07	86.38	73.75	63.93	56.10	0.00						
25	2.06	4.00	9.65	16.60	18.76	27.69	36.50	53.87	71.01	104.80	138.13	171.13	168.70	133.88	109.58	91.83	78.41	67.96	59.65	0.00						
26	2.14	4.16	10.03	17.26	19.51	28.80	37.96	56.03	73.85	108.99	143.66	177.97	178.93	141.99	116.22	97.40	83.16	72.08	63.26	0.00						
28	2.30	4.48	10.80	18.59	21.02	31.02	40.88	60.34	79.53	117.37	154.71	191.66	199.96	158.68	129.88	108.85	92.94	80.55	30.81	0.00						
30	2.47	4.80	11.57	19.92	22.52	33.23	43.80	64.65	85.21	125.76	165.76	205.36	221.77	175.99	144.04	120.72	103.07	68.06	0.00							
32	2.63	5.12	12.35	21.24	24.02	35.45	46.72	68.96	90.89	134.14	176.81	219.05	244.31	193.87	158.68	132.99	113.55	15.44	0.00							
35	2.88	5.60	13.50	23.24	26.27	38.77	51.10	75.42	99.41	146.72	193.38	239.58	279.46	221.77	181.51	152.12	49.31	0.00								
40	3.29	6.40	15.43	26.56	30.02	44.31	58.40	86.19	113.61	167.68	221.01	273.81	326.18	270.95	197.06	55.75	0.00									
45	3.70	7.20	17.36	29.87	33.78	49.85	65.70	96.97	127.81	188.64	248.64	308.03	366.95	263.15	98.77	0.00										
	Type I Manual or Drip Lubrication				Type II Bath or Disc Lubrication							Type III Oil Stream Lubrication														

NOTE: The limiting RPM for each lubrication type is shown in the chart's shaded areas directly above the type I, II or III reference. For optimum results, it is suggested that the roller chain manufacturer be given the opportunity to evaluate the operating condition of chains in the shaded (galling range) speed area. The horsepower ratings of multiple-strand chains are greater than those for single strand chain. See table 1 on page 8 for multiple-strand factors.

HEAVY SERIES 160H – 50.800 mm (2.000 in.) PITCH KILOWATTS

TABLE 47. KILOWATTS RATINGS – SINGLE STRAND ROLLER CHAIN NO. 160H

No. of Teeth	Speed, min-1, Small Sprocket																									
	2	5	10	25	40	50	75	100	150	200	300	400	500	600	700	800	900	1000	1100	1200	1400	1600	1800	2000	2200	
11	0.54	1.30	2.53	6.11	9.59	11.88	17.54	23.12	34.12	44.97	66.37	87.48	72.02	54.79	43.48	35.59	29.82	25.46	22.07	19.37	15.37	12.58	10.54	9.00	0.00	
12	0.59	1.42	2.77	6.66	10.46	12.96	19.13	25.22	37.22	49.06	72.40	95.43	82.06	62.43	49.54	40.55	33.98	29.01	25.15	22.07	17.52	14.34	12.01	8.96	0.00	
13	0.64	1.54	3.00	7.22	11.34	14.04	20.73	27.32	40.32	53.15	78.44	103.39	92.53	70.39	55.86	45.72	38.32	32.72	28.36	24.89	19.75	16.16	13.55	0.00		
14	0.69	1.66	3.23	7.77	12.21	15.12	22.32	29.42	43.42	57.24	84.47	111.34	103.41	78.67	62.43	51.10	42.82	36.56	31.69	27.81	22.07	18.07	6.03	0.00		
15	0.74	1.78	3.46	8.33	13.08	16.21	23.92	31.52	46.53	61.32	90.51	119.29	114.69	87.25	69.24	56.67	47.49	40.55	35.15	30.85	24.48	20.04	0.00			
16	0.79	1.90	3.69	8.89	13.95	17.29	25.51	33.63	49.63	65.41	96.54	127.25	126.35	96.11	76.27	62.43	52.32	44.67	38.72	33.98	26.97	22.07	0.00			
17	0.84	2.01	3.92	9.44	14.82	18.37	27.11	35.73	52.73	69.50	102.57	135.20	138.37	105.26	83.53	68.37	57.30	48.92	42.41	37.22	29.53	0.00				
18	0.88	2.13	4.15	10.00	15.70	19.45	28.70	37.83	55.83	73.59	108.61	143.15	150.76	114.69	91.01	74.49	62.43	53.30	46.20	40.55	32.18	0.00				
19	0.93	2.25	4.38	10.55	16.57	20.53	30.29	39.93	58.93	77.68	114.64	151.11	163.50	124.38	98.70	80.79	67.70	57.81	50.10	43.97	32.68	0.00				
20	0.98	2.37	4.61	11.11	17.44	21.61	31.89	42.03	62.03	81.76	120.67	159.06	176.57	134.32	106.59	87.25	73.12	62.43	54.11	47.49	0.00					
21	1.03	2.49	4.84	11.66	18.31	22.69	33.48	44.13	65.14	85.85	126.71	167.01	189.98	144.52	114.69	93.87	78.67	67.17	58.22	51.10	0.00					
22	1.08	2.61	5.07	12.22	19.18	23.77	35.08	46.23	68.24	89.94	132.74	174.96	203.71	154.97	122.98	100.66	84.35	72.02	62.43	54.79	0.00					
23	1.13	2.72	5.30	12.77	20.06	24.85	36.67	48.34	71.34	94.03	138.78	182.92	217.76	165.65	131.46	107.60	90.17	76.99	66.73	50.89	0.00					
24	1.18	2.84	5.53	13.33	20.93	25.93	38.27	50.44	74.44	98.12	144.81	190.87	232.11	176.57	140.12	114.69	96.11	82.06	71.13	16.23	0.00					
25	1.23	2.96	5.76	13.88	21.80	27.01	39.86	52.54	77.54	102.21	150.84	198.82	246.32	187.72	148.97	121.93	102.18	87.25	75.62	0.00						
26	1.28	3.08	5.99	14.44	22.67	28.09	41.46	54.64	80.64	106.29	156.88	206.78	256.17	199.10	158.00	129.32	108.38	92.53	50.03	0.00						
28	1.38	3.32	6.45	15.55	24.42	30.25	44.64	58.84	86.85	114.47	168.94	222.68	275.88	222.51	176.57	144.52	121.12	100.80	0.00							
30	1.47	3.55	6.91	16.66	26.16	32.41	47.83	63.05	93.05	122.65	181.01	238.59	295.58	246.77	195.83	160.28	134.32	36.58	0.00							
32	1.57	3.79	7.37	17.77	27.90	34.57	51.02	67.25	99.25	130.82	193.08	254.49	315.29	271.85	215.73	176.57	117.60	0.00								
35	1.72	4.15	8.07	19.44	30.52	37.81	55.81	73.56	108.56	143.09	211.18	278.35	344.85	310.97	246.77	201.98	16.63	0.00								
40	1.97	4.74	9.22	22.21	34.88	43.21	63.78	84.06	124.07	163.53	241.35	318.12	394.11	379.93	257.38	42.82	0.00									
45	2.21	5.33	10.37	24.99	39.24	48.62	71.75	94.57	139.58	183.97	271.52	357.88	443.38	369.84	129.01	0.00										
	Type I Manual or Drip Lubrication				Type II Bath or Disc Lubrication							Type III Oil Stream Lubrication														

NOTE: The limiting RPM for each lubrication type is shown in the chart's shaded areas directly above the type I, II or III reference. For optimum results, it is suggested that the roller chain manufacturer be given the opportunity to evaluate the operating condition of chains in the shaded (galling range) speed area. The horsepower ratings of multiple-strand chains are greater than those for single strand chain. See table 1 on page 8 for multiple-strand factors.

HEAVY SERIES 180H – 57.150 mm (2.250 in.) PITCH KILOWATTS

TABLE 48. KILOWATTS RATINGS – SINGLE STRAND ROLLER CHAIN NO. 180H

No. of Teeth	Speed, min-1, Small Sprocket																								
	2	5	10	25	37	50	75	100	150	200	300	400	500	600	700	800	900	1000	1100	1200	1400	1600	1800	2000
11	0.74	1.79	3.48	8.38	12.21	16.31	24.07	31.72	46.82	61.71	91.08	110.60	79.14	60.20	47.78	39.10	32.77	27.98	24.25	21.29	16.89	13.83	11.59	0.00
12	0.81	1.95	3.79	9.14	13.32	17.79	26.26	34.61	51.07	67.32	99.36	126.02	90.17	68.60	54.44	44.55	37.34	31.88	27.63	24.25	19.25	15.75	1.79	0.00
13	0.88	2.11	4.11	9.91	14.43	19.27	28.44	37.49	55.33	72.93	107.63	141.87	101.68	77.35	61.38	50.24	42.10	35.95	31.16	27.35	21.70	17.76	0.00	
14	0.94	2.28	4.43	10.67	15.54	20.75	30.63	40.37	59.59	78.54	115.91	152.78	113.63	86.44	68.60	56.15	47.05	40.17	34.82	30.56	24.25	7.63	0.00	
15	1.01	2.44	4.74	11.43	16.65	22.24	32.82	43.26	63.84	84.15	124.19	163.70	126.02	95.87	76.08	62.27	52.18	44.55	38.62	33.89	26.90	0.00		
16	1.08	2.60	5.06	12.19	17.77	23.72	35.01	46.14	68.10	89.76	132.47	174.61	138.83	105.61	83.81	68.60	57.49	49.08	42.55	37.34	29.63	0.00		
17	1.15	2.76	5.38	12.96	18.88	25.20	37.19	49.03	72.36	95.37	140.75	185.52	152.05	115.67	91.79	75.13	62.96	53.76	46.60	40.89	0.00			
18	1.21	2.93	5.69	13.72	19.99	26.68	39.38	51.91	76.61	100.98	149.03	196.44	165.66	126.02	100.00	81.85	68.60	58.57	50.77	44.55	0.00			
19	1.28	3.09	6.01	14.48	21.10	28.17	41.57	54.79	80.87	106.59	157.31	207.35	179.65	136.67	108.45	88.77	74.39	63.52	55.06	48.32	0.00			
20	1.35	3.25	6.32	15.24	22.21	29.65	43.76	57.68	85.12	112.20	165.59	218.26	194.02	147.60	117.13	95.87	80.34	68.60	59.46	41.24	0.00			
21	1.42	3.41	6.64	16.00	23.32	31.13	45.95	60.56	89.38	117.81	173.87	229.18	208.75	158.80	126.02	103.15	86.44	73.81	63.97	0.00				
22	1.48	3.58	6.96	16.77	24.43	32.61	48.13	63.44	93.64	123.42	182.15	240.09	223.84	170.28	135.13	110.60	92.69	79.14	65.14	0.00				
23	1.55	3.74	7.27	17.53	25.54	34.10	50.32	66.33	97.89	129.03	190.43	251.00	239.27	182.02	144.45	118.23	99.08	84.60	21.86	0.00				
24	1.62	3.90	7.59	18.29	26.65	35.58	52.51	69.21	102.15	134.64	198.71	261.92	255.05	194.02	153.97	126.02	105.61	90.17	0.00					
25	1.69	4.06	7.91	19.05	27.76	37.06	54.70	72.10	106.40	140.25	206.99	272.83	271.15	206.27	163.69	133.98	112.28	71.71	0.00					
26	1.75	4.23	8.22	19.81	28.87	38.54	56.89	74.98	110.66	145.86	215.27	283.74	287.58	218.77	173.61	142.10	119.08	27.99	0.00					
28	1.89	4.55	8.85	21.34	31.09	41.51	61.26	80.75	119.17	157.08	231.83	305.57	321.40	244.49	194.02	158.80	109.11	0.00						
30	2.02	4.88	9.49	22.86	33.31	44.47	65.64	86.52	127.69	168.30	248.39	327.40	356.44	271.15	215.18	176.12	23.09	0.00						
32	2.16	5.20	10.12	24.39	35.53	47.44	70.01	92.28	136.20	179.52	264.95	349.22	392.67	298.72	237.05	148.84	0.00							
35	2.36	5.69	11.07	26.67	38.86	51.89	76.58	100.93	148.97	196.35	289.79	381.96	449.17	341.69	271.15	21.04	0.00							
40	2.70	6.50	12.65	30.48	44.41	59.30	87.52	115.35	170.25	224.40	331.18	436.53	540.81	417.47	92.17	0.00								
45	3.04	7.31	14.23	34.29	49.96	66.71	98.46	129.77	191.53	252.45	372.58	491.09	559.28	248.32	0.00									
	Type I Manual or Drip Lubrication				Type II Bath or Disc Lubrication							Type III Oil Stream Lubrication												

NOTE: The limiting RPM for each lubrication type is shown in the chart's shaded areas directly above the type I, II or III reference. For optimum results, it is suggested that the roller chain manufacturer be given the opportunity to evaluate the operating condition of chains in the shaded (galling range) speed area. The horsepower ratings of multiple-strand chains are greater than those for single strand chain. See table 1 on page 8 for multiple-strand factors.

HEAVY SERIES 200H – 63.500 mm (1.500 in.) PITCH KILOWATTS

TABLE 49. KILOWATTS RATINGS – SINGLE STRAND ROLLER CHAIN NO. 200H

No. of Teeth	Speed, min-1, Small Sprocket																												
	2	5	10	25	33	50	75	100	150	200	250	300	350	400	450	500	600	700	800	900	1000	1100	1200	1300	1400	1500	1600	1700	1800
11	1.02	2.47	4.80	11.57	15.10	22.50	33.21	43.77	64.60	85.15	105.49	125.67	145.71	120.33	100.84	86.10	65.50	51.98	42.54	35.65	30.44	26.39	23.16	20.54	18.38	16.57	15.04	13.73	0.00
12	1.12	2.69	5.24	12.62	16.47	24.55	36.23	47.75	70.47	92.89	115.08	137.09	158.96	137.10	114.90	98.10	74.63	59.22	48.47	40.62	34.68	30.06	26.39	23.40	20.94	18.88	14.00	0.00	
13	1.21	2.92	5.67	13.67	17.84	26.59	39.25	51.73	76.35	100.63	124.67	148.52	172.20	154.59	129.56	110.62	84.15	66.78	54.66	45.81	39.11	33.90	29.75	26.39	23.61	21.29	0.00		
14	1.30	3.14	6.11	14.72	19.22	28.64	42.26	55.71	82.22	108.37	134.26	159.94	185.45	172.77	144.79	123.62	94.04	74.63	61.08	51.19	43.71	37.89	33.25	29.49	26.39	0.00			
15	1.40	3.36	6.54	15.77	20.59	30.68	45.28	59.69	88.09	116.11	143.85	171.36	198.70	191.61	160.58	137.10	104.30	82.77	67.74	56.77	48.47	42.02	36.87	32.70	0.00				
16	1.49	3.59	6.98	16.82	21.96	32.73	48.30	63.67	93.96	123.85	153.44	182.79	211.94	211.08	176.90	151.04	114.90	91.18	74.63	62.54	53.40	46.29	40.62	16.53	0.00				
17	1.58	3.81	7.42	17.88	23.34	34.77	51.32	67.65	99.84	131.59	163.03	194.21	225.19	231.18	193.74	165.42	125.84	99.86	81.73	68.50	58.48	50.69	44.49	0.00					
18	1.68	4.04	7.85	18.93	24.71	36.82	54.34	71.62	105.71	139.33	172.62	205.64	238.43	251.87	211.08	180.23	137.10	108.80	89.05	74.63	63.72	55.23	8.76	0.00					
19	1.77	4.26	8.29	19.98	26.08	38.86	57.36	75.60	111.58	147.07	182.21	217.06	251.68	273.15	228.92	195.45	148.69	117.99	96.57	80.93	69.10	59.90	0.00						
20	1.86	4.49	8.73	21.03	27.45	40.91	60.38	79.58	117.45	154.81	191.80	228.49	264.93	295.00	247.22	211.08	160.58	127.43	104.30	87.41	74.63	23.17	0.00						
21	1.95	4.71	9.16	22.08	28.83	42.96	63.40	83.56	123.33	162.55	201.39	239.91	278.17	317.40	266.00	227.11	172.77	137.10	112.22	94.04	80.30	0.00							
22	2.05	4.93	9.60	23.13	30.20	45.00	66.42	87.54	129.20	170.30	210.98	251.33	291.42	340.34	285.22	243.53	185.26	147.01	120.33	100.84	64.65	0.00							
23	2.14	5.16	10.04	24.18	31.57	47.05	69.43	91.52	135.07	178.04	220.57	262.76	304.67	346.34	304.89	260.32	198.03	157.15	128.62	107.79	8.77	0.00							
24	2.23	5.38	10.47	25.24	32.94	49.09	72.45	95.50	140.95	185.78	230.16	274.18	317.91	361.39	324.98	277.48	211.08	167.51	137.10	114.90	0.00								
25	2.33	5.61	10.91	26.29	34.32	51.14	75.47	99.48	146.82	193.52	239.75	285.61	331.16	376.45	345.51	295.00	224.41	178.09	145.76	88.53	0.00								
26	2.42	5.83	11.34	27.34	35.69	53.18	78.49	103.46	152.69	201.26	249.34	297.03	344.41	391.51	366.44	312.87	238.01	188.88	154.59	34.55	0.00								
	Type I Manual or Drip Lubrication				Type II Bath or Disc Lubrication								Type III Oil Stream Lubrication																

NOTE: The limiting RPM for each lubrication type is shown in the chart's shaded areas directly above the type I, II or III reference. For optimum results, it is suggested that the roller chain manufacturer be given the opportunity to evaluate the operating condition of chains in the shaded (galling range) speed area. The horsepower ratings of multiple-strand chains are greater than those for single strand chain. See table 1 on page 8 for multiple-strand factors.

HEAVY SERIES 240H – 76.200 mm (3.000 in.) PITCH KILOWATTS

TABLE 50. KILOWATTS RATINGS – SINGLE STRAND ROLLER CHAIN NO. 240H

No. of Teeth	Speed, min-1, Small Sprocket																									
	2	5	10	25	27	50	75	100	150	200	250	300	350	400	450	500	600	700	800	900	1000	1100	1200	1300	1400	1500
11	1.74	4.19	8.15	19.64	21.14	38.20	56.38	74.31	109.67	144.56	179.09	213.35	170.10	139.22	116.68	99.62	75.78	60.14	49.22	41.25	35.22	30.53	26.79	23.76	21.26	0.00
12	1.90	4.57	8.89	21.42	23.06	41.67	61.50	81.07	119.64	157.70	195.37	232.74	193.81	158.63	132.94	113.51	86.35	68.52	56.09	47.00	40.13	34.79	30.53	27.07	0.00	
13	2.05	4.95	9.63	23.21	24.99	45.15	66.63	87.82	129.61	170.84	211.65	252.14	218.54	178.87	149.90	127.99	97.36	77.26	63.24	53.00	45.25	39.22	34.42	0.00		
14	2.21	5.33	10.37	24.99	26.91	48.62	71.75	94.58	139.58	183.98	227.93	271.53	244.23	199.90	167.53	143.04	108.81	86.35	70.68	59.23	50.57	43.83	13.56	0.00		
15	2.37	5.71	11.11	26.78	28.83	52.09	76.88	101.33	149.55	197.12	244.21	290.93	270.86	221.70	185.79	158.63	120.68	95.76	78.38	65.69	56.09	48.61	0.00			
16	2.53	6.09	11.85	28.56	30.75	55.56	82.00	108.09	159.52	210.26	260.49	310.32	298.39	244.23	204.68	174.76	132.94	105.50	86.35	72.36	61.79	0.00				
17	2.69	6.47	12.59	30.35	32.67	59.04	87.13	114.84	169.49	223.41	276.78	329.72	326.80	267.48	224.16	191.39	145.60	115.54	94.57	79.25	67.67	0.00				
18	2.84	6.85	13.33	32.13	34.60	62.51	92.25	121.60	179.46	236.55	293.06	349.11	356.05	291.43	244.23	208.53	158.63	125.88	103.03	86.35	12.62	0.00				
19	3.00	7.23	14.07	33.92	36.52	65.98	97.38	128.35	189.43	249.69	309.34	368.51	386.13	316.05	264.86	226.14	172.03	136.52	111.74	93.64	0.00					
20	3.16	7.62	14.81	35.70	38.44	69.45	102.50	135.11	199.40	262.83	325.62	387.90	417.02	341.32	286.05	244.23	185.79	147.44	120.68	73.32	0.00					
21	3.32	8.00	15.56	37.49	40.36	72.93	107.63	141.87	209.37	275.97	341.90	407.30	448.68	367.24	307.77	262.77	199.90	158.63	129.84	0.00						
22	3.48	8.38	16.30	39.27	42.29	76.40	112.76	148.62	219.34	289.11	358.18	426.69	481.11	393.78	330.01	281.77	214.35	170.10	139.22	0.00						
24	3.79	9.14	17.78	42.84	46.13	83.34	123.01	162.13	239.28	315.40	390.74	465.48	539.73	448.68	376.02	321.05	244.23	193.81	36.52	0.00						
25	3.95	9.52	18.52	44.63	48.05	86.82	128.13	168.89	249.25	328.54	407.02	484.88	562.21	477.01	399.76	341.32	259.65	206.05	0.00							
26	4.11	9.90	19.26	46.41	49.97	90.29	133.26	175.64	259.23	341.68	423.30	504.27	584.70	505.92	423.99	362.01	275.39	218.54	0.00							
	Type I Manual or Drip Lubrication				Type II Bath or Disc Lubrication							Type III Oil Stream Lubrication														

NOTE: The limiting RPM for each lubrication type is shown in the chart's shaded areas directly above the type I, II or III reference. For optimum results, it is suggested that the roller chain manufacturer be given the opportunity to evaluate the operating condition of chains in the shaded (galling range) speed area. The horsepower ratings of multiple-strand chains are greater than those for single strand chain. See table 1 on page 8 for multiple-strand factors.

SPROCKET DATA – METRIC

TABLE 51. SPROCKET DATA – METRIC

No. of Teeth	35 9.53 mm Pitch		40, 41 12.7 mm Pitch		50 15.88 mm Pitch		60 19.05 mm Pitch		80 25.4 mm Pitch		100 31.75 mm Pitch		120 38.10 mm Pitch		140 44.45 mm Pitch		160 50.80 mm Pitch		180 57.15 mm Pitch		200 63.50 mm Pitch		240 76.20 mm Pitch	
	Pitch Dia.	O.D.	Pitch Dia.	O.D.	Pitch Dia.	O.D.	Pitch Dia.	O.D.	Pitch Dia.	O.D.	Pitch Dia.	O.D.	Pitch Dia.	O.D.	Pitch Dia.	O.D.	Pitch Dia.	O.D.	Pitch Dia.	O.D.	Pitch Dia.	O.D.	Pitch Dia.	O.D.
9	27.838	31.902	37.135	42.520	46.406	53.137	55.702	63.779	74.270	85.014	161.417	106.274	111.658	127.533	129.972	148.793	148.539	170.053	–	–	185.674	212.522	222.783	255.118
10	30.836	35.052	41.097	46.711	51.384	58.395	61.646	70.053	82.194	93.421	102.743	116.764	123.292	140.106	143.840	163.474	164.389	186.817	–	–	205.486	233.553	246.583	280.264
11	33.807	38.151	45.085	50.876	56.363	63.602	67.615	76.302	90.145	101.752	112.700	127.178	135.230	152.603	157.785	178.054	180.315	203.479	202.844	228.854	225.349	254.381	270.485	305.257
12	36.805	41.275	49.073	55.016	61.341	68.783	73.609	82.525	98.146	110.033	122.682	137.541	147.218	165.049	171.755	192.557	196.266	220.066	220.802	247.650	245.364	275.082	294.411	330.098
13	39.802	44.374	53.061	59.157	66.345	73.939	79.604	88.722	106.147	118.288	132.664	147.853	159.207	177.444	185.750	207.010	212.268	236.576	238.811	266.192	265.354	295.707	318.414	354.863
14	42.799	47.447	57.074	63.271	71.349	79.070	85.623	94.894	114.148	126.543	142.672	158.166	171.221	189.789	199.746	221.437	228.295	253.060	256.819	284.734	285.369	316.357	342.443	379.552
15	45.822	50.546	61.087	67.361	76.352	84.201	91.618	101.067	122.174	134.747	152.705	168.427	183.261	202.108	213.792	235.788	244.348	269.469	274.879	303.276	305.435	336.855	366.497	404.165
16	48.819	53.619	65.100	71.476	81.382	89.332	97.638	107.213	130.200	142.926	162.738	178.664	195.301	214.401	227.838	250.139	260.401	285.877	292.938	321.564	325.501	357.302	390.576	428.777
17	51.841	56.667	69.113	75.565	86.385	94.463	103.683	113.335	138.227	151.130	172.796	188.900	207.340	226.670	241.910	264.439	276.479	302.235	311.023	340.106	345.567	377.749	414.706	453.314
18	54.839	59.741	73.127	79.629	91.415	99.568	109.703	119.482	146.279	159.283	182.829	199.111	219.405	238.938	255.981	278.765	292.557	318.592	329.108	358.394	365.684	398.196	438.810	477.850
19	57.861	62.814	77.165	83.718	96.444	104.648	115.748	125.603	154.330	167.462	192.888	209.321	231.470	251.181	270.053	293.040	308.635	334.899	347.218	376.682	385.826	418.643	462.966	502.387
20	60.884	65.862	81.178	87.808	101.473	109.753	121.768	131.699	162.357	175.616	202.971	219.507	243.561	263.398	284.150	307.315	324.739	351.231	365.328	395.224	405.943	439.039	487.096	526.847
21	63.906	68.910	85.217	91.872	106.502	114.859	127.813	137.820	170.434	183.769	213.030	229.692	255.626	275.615	298.247	321.564	340.843	367.538	383.438	413.512	426.085	459.410	511.277	551.307
22	66.929	71.958	89.230	95.961	111.557	119.939	133.858	143.916	178.486	191.897	223.088	239.878	267.716	287.833	312.344	335.813	356.946	383.794	401.574	431.800	446.202	479.730	535.432	575.691
23	69.952	75.032	93.269	100.025	116.586	125.019	139.903	150.038	186.538	200.025	233.172	250.038	279.806	300.050	326.441	350.063	373.075	400.075	419.710	450.088	466.344	500.050	559.613	600.151
24	72.974	78.080	97.307	104.089	121.615	130.099	145.948	156.134	194.589	208.178	243.256	260.223	291.897	312.268	340.538	364.312	389.204	416.357	437.845	468.376	486.461	520.446	583.794	624.535
25	75.997	81.128	101.321	108.153	126.670	135.179	151.994	162.230	202.667	216.306	253.314	270.383	303.987	324.460	354.660	378.536	405.333	432.613	455.981	486.664	506.654	540.766	607.974	648.919
26	79.019	84.176	105.359	112.217	131.699	140.259	158.039	168.326	210.718	224.434	263.398	280.543	316.078	336.652	368.757	392.760	421.462	448.843	0.000	0.000	526.796	561.086	632.181	673.303
27	82.042	87.224	109.398	116.281	136.754	145.339	164.084	174.422	218.796	232.562	273.482	290.678	328.193	348.818	382.880	406.959	437.591	465.099	0.000	0.000	546.989	581.406	656.361	697.687
28	85.065	90.272	113.436	120.345	141.783	150.419	170.155	180.518	226.847	240.665	283.566	300.838	340.284	361.010	397.002	421.183	453.720	481.355	510.438	541.528	567.182	601.650	680.568	721.995
29	88.087	93.294	117.475	124.384	146.837	155.499	176.200	186.588	234.925	248.793	293.649	310.998	352.400	373.177	411.124	435.381	469.849	497.586	–	–	587.299	621.970	704.774	746.379
30	91.135	96.342	121.488	128.448	151.867	160.553	182.245	192.684	243.002	256.896	303.733	321.132	364.490	385.369	425.247	449.580	486.004	513.817	546.735	578.104	607.492	642.239	728.980	770.687
31	94.158	99.390	125.527	132.512	156.921	165.633	188.290	198.755	251.079	265.024	313.842	331.292	376.606	397.535	439.369	463.779	502.133	530.047	–	–	627.685	662.559	753.212	795.071
32	97.180	102.438	129.565	136.576	161.950	170.713	194.361	204.851	259.131	273.126	323.926	341.427	388.696	409.702	453.492	477.977	518.287	546.252	–	–	647.827	682.803	777.418	819.379
33	100.203	105.461	133.604	140.614	167.005	175.768	200.406	210.922	267.208	281.229	334.010	351.561	400.812	421.869	467.614	492.176	534.416	562.483	–	–	668.020	703.072	801.624	843.763
34	103.226	108.509	137.643	144.678	172.060	180.848	206.451	217.018	275.285	289.357	344.094	361.696	412.928	434.035	481.736	506.374	550.570	578.714	–	–	688.213	723.392	825.856	868.070
35	106.248	111.557	141.681	148.717	177.089	185.903	212.522	223.088	283.362	297.459	354.203	371.831	425.044	446.176	495.884	520.548	566.725	594.919	637.565	669.290	708.406	743.636	850.062	892.378
36	109.296	114.579	145.720	152.781	182.143	190.983	218.567	229.159	291.440	305.562	364.287	381.965	437.159	458.343	510.007	534.721	582.854	611.124	–	–	728.599	763.905	874.293	916.686
37	112.319	117.627	149.758	156.845	187.198	196.037	224.638	235.255	299.517	313.665	374.396	392.100	449.250	470.510	524.129	548.919	599.008	627.329	–	–	748.792	784.149	898.525	940.994
38	115.341	120.675	153.797	160.884	192.227	201.117	230.683	241.325	307.594	321.767	384.480	402.209	461.366	482.651	538.277	563.093	615.163	643.534	–	–	768.985	804.418	922.757	965.302
39	118.364	123.723	157.836	164.948	197.282	206.172	236.753	247.396	315.671	329.870	394.564	412.344	473.481	494.817	552.399	577.291	631.317	659.765	–	–	789.178	824.662	946.988	989.609
40	121.412	126.746	161.874	168.986	202.336	211.226	242.799	253.492	323.723	337.972	404.673	422.478	485.597	506.959	566.547	591.464	647.471	675.970	728.396	760.476	809.371	844.931	971.220	1013.917
41	124.435	129.794	165.913	173.050	207.391	216.306	248.869	259.563	331.800	346.075	414.757	432.613	497.713	519.125	580.669	605.638	663.626	692.175	–	–	829.564	865.175	995.451	1038.225
42	127.457	132.817	169.951	177.089	212.420	221.361	254.914	265.633	339.877	354.178	424.866	442.722	509.829	531.266	594.817	594.411	679.780	708.355	–	–	849.757	885.444	1019.683	1062.533
43	130.480	135.865	173.990	181.127	217.475	226.416	260.985	271.704	347.980	362.280	434.950	452.857	521.945	543.408	608.940	633.984	695.935	724.560	–	–	869.950	905.688	1043.915	1086.841
44	133.528	138.887	178.029	185.191	222.529	231.496	267.030	277.774	356.057	370.383	445.059	462.966	534.060	555.574	623.087	648.157	712.089	740.766	–	–	890.143	925.957	1068.146	1111.148
45	136.550	141.935	182.067	189.255	227.584	236.550	273.101	283.870	364.134	378.485	455.143	473.100	546.176	567.715	637.210	662.330	728.243	756.971	819.277	851.662	910.336	946.201	1092.378	1135.456
46	139.573	144.983	186.106	193.269	232.639	241.605	279.146	289.941	372.212	386.563	465.252	483.210	558.292	579.857	651.358	676.504	744.398	773.151	–	–	930.529	966.394	1116.609	1159.688
47	142.596	148.006	190.144	197.333	237.668	246.659	285.217	296.012	380.289	394.665	475.361	493.344	570.433	592.023	665.505	690.677	760.552	789.356	–	–	950.722	986.663	1140.841	1183.996
48	145.644	151.054	194.183	201.371	242.722	251.739	291.262	302.082	388.366	402.768	485.445	503.453	582.549	604.164	679.628	704.850	776.732	805.536	–	–	970.915	1006.907	1165.073	1208.303
49	148.666	154.076	198.222	205.435	247.777	256.819	297.332	308.153	396.443	410.870	495.554	513.563	594.665	616.306	693.776	719.023	792.886	821.741	–	–	991.108	1027.176	1189.330	1232.611
50	151.689	157.124	202.260	209.474	252.832	261.849	303.378	314.223	404.571	418.973	505.663	523.697	606.781	628.447	707.923	733.171	809.041	837.921	–	–	1011.301	1047.420	1213.561	1256.919
51	154.711	160.147	206.299	213.538	257.886	266.903	309.448	320.294	412.598	427.050	515.747	533.832	618.896	640.588	722.046	747.344	825.195	854.100	–	–	1031.494	1067.613	1237.793	1281.151
52	157.759	163.195	210.337	217.576	262.915	271.958	315.519	326.365	420.675	435.153	525.856	543.941	631.012	652.729	736.194	761.492	841.350	870.280	–	–	1051.687	1087.882	1262.050	1305.458
53	160.782	166.218	214.376	221.615	267.970	277.038	321.564	332.435	428.752	443.255	535.940	554.050	643.128	664.870	750.341	775.665	857.529	886.485	–	–	1071.880	1108.126	1286.281	1329.766

Continued on next page.

Continued from previous page.

No. of Teeth	35 9.53 mm Pitch		40, 41 12.7 mm Pitch		50 15.88 mm Pitch		60 19.05 mm Pitch		80 25.4 mm Pitch		100 31.75 mm Pitch		120 38.10 mm Pitch		140 44.45 mm Pitch		160 50.80 mm Pitch		180 57.15 mm Pitch		200 63.50 mm Pitch		240 76.20 mm Pitch	
	Pitch Dia.	O.D.	Pitch Dia.	O.D.	Pitch Dia.	O.D.	Pitch Dia.	O.D.	Pitch Dia.	O.D.	Pitch Dia.	O.D.	Pitch Dia.	O.D.	Pitch Dia.	O.D.	Pitch Dia.	O.D.	Pitch Dia.	O.D.	Pitch Dia.	O.D.	Pitch Dia.	O.D.
54	163.805	169.266	218.415	225.679	273.025	282.092	327.635	338.506	436.829	451.333	546.049	564.185	655.269	677.012	764.464	789.838	873.684	902.691	982.878	1015.492	1092.098	1128.319	1310.513	1353.998
55	166.853	172.288	222.453	229.718	278.079	287.147	333.680	344.576	444.932	459.435	556.158	574.294	667.385	689.153	778.612	804.012	889.838	918.870	–	–	1112.317	1148.588	1334.770	1378.306
56	169.875	175.336	226.492	233.756	283.134	292.202	339.750	350.647	453.009	467.512	566.242	584.403	679.501	701.294	792.759	818.159	905.993	935.050	–	–	1132.510	1168.781	1359.002	1402.613
57	172.898	178.359	230.530	237.820	288.188	297.256	345.821	356.718	461.086	475.615	576.351	594.538	691.617	713.435	806.907	832.333	922.172	951.255	–	–	1152.703	1189.025	1383.233	1426.845
58	175.946	181.407	234.594	241.859	293.218	302.311	351.866	362.788	469.163	483.718	586.461	604.647	703.758	725.576	821.030	846.506	938.327	967.435	–	–	1172.896	1209.294	1407.490	1451.153
59	178.968	184.429	238.633	245.897	298.272	307.391	357.937	368.859	475.971	491.820	596.544	614.756	715.874	737.718	835.177	860.679	954.481	983.615	–	–	1193.089	1229.538	1431.747	1475.461
60	181.991	187.477	242.672	249.961	303.327	312.445	363.982	374.929	485.318	499.897	606.654	624.865	727.989	749.859	849.325	874.827	970.661	999.795	1090.219	1124.712	1213.282	1249.731	1455.979	1499.692
61	185.014	190.500	246.710	254.000	308.381	317.500	370.053	381.000	493.420	508.000	616.763	635.000	740.105	762.000	863.473	889.000	986.815	1015.975	–	–	1233.551	1270.000	1480.236	1524.000
62	188.062	193.523	250.749	258.039	313.436	322.555	376.123	387.045	501.498	516.077	626.872	645.084	752.246	774.116	877.595	903.148	1002.970	1032.154	–	–	1253.744	1290.193	1504.467	1548.232
63	191.084	196.571	254.787	262.077	318.491	327.609	382.168	393.116	509.575	524.180	636.956	655.218	764.362	786.257	891.743	917.296	1019.150	1048.360	–	–	1273.937	1310.437	1528.699	1572.539
64	194.107	199.593	258.826	266.141	323.545	332.664	388.239	399.186	517.652	532.257	647.065	665.328	776.478	798.398	905.891	931.469	1035.304	1064.539	–	–	1294.130	1330.630	1552.956	1596.847
65	197.155	202.641	262.865	270.180	328.574	332.638	394.310	405.257	525.729	540.360	657.174	675.462	788.594	810.539	920.039	945.617	1051.458	1080.719	–	–	1314.323	1350.899	1577.213	1621.079
66	200.177	205.664	266.903	274.218	333.629	342.773	400.355	411.328	533.806	548.462	667.283	685.571	800.735	822.681	934.187	959.790	1067.638	1096.899	–	–	1334.516	1371.143	1601.445	1645.387
67	203.200	208.712	270.942	278.282	338.684	347.828	406.425	417.398	541.909	556.539	677.367	695.681	812.851	834.822	948.334	973.963	1083.793	1113.079	–	–	1354.760	1391.336	1625.702	1669.618
68	206.248	211.734	274.980	282.321	343.738	352.882	412.496	423.469	549.986	564.642	687.476	705.790	824.967	846.963	962.457	988.111	1099.972	1129.259	–	–	1374.953	1411.605	1649.933	1693.926
69	209.271	214.782	279.044	286.360	348.793	357.937	418.541	429.539	558.063	572.719	697.586	715.899	837.108	859.079	976.605	1002.259	1116.127	1145.438	–	–	1395.146	1431.798	1674.190	1718.158
70	212.293	217.805	283.083	290.424	353.847	363.017	424.612	434.467	566.141	580.822	707.695	726.034	849.224	871.245	990.752	1016.432	1132.281	1161.644	–	–	1415.339	1452.042	1698.447	1742.465
71	215.341	220.828	287.122	294.462	358.902	368.071	430.682	441.655	574.218	588.899	717.779	736.117	861.339	883.361	1004.900	1030.580	1148.461	1177.798	–	–	1435.532	1472.235	1722.679	1766.697
72	218.364	223.876	291.160	298.501	363.931	373.126	436.728	447.751	582.320	597.002	727.888	746.252	873.455	895.502	1019.048	1044.753	1164.615	1194.003	–	–	1455.801	1492.504	1746.936	1791.005
73	221.386	226.898	295.199	302.539	368.986	378.181	442.798	453.796	590.398	605.079	737.997	756.361	885.596	907.618	1033.196	1058.901	1180.795	1210.158	–	–	1475.994	1512.697	1771.167	1815.236
74	224.434	229.946	299.237	306.603	374.040	383.235	448.869	459.867	598.475	613.181	748.106	766.470	897.712	919.785	1047.344	1073.074	1196.950	1226.363	–	–	1496.187	1532.941	1795.424	1839.544
75	228.473	232.969	303.276	310.617	379.095	388.290	454.914	465.938	606.552	621.259	758.190	776.580	909.828	931.901	1061.466	1087.196	1213.104	1242.517	–	–	1516.380	1553.134	1819.681	1863.776
76	230.480	236.017	307.315	314.681	384.150	393.344	460.985	472.008	614.629	629.361	768.299	786.714	921.969	944.042	1075.614	1101.395	1229.284	1258.722	–	–	1536.573	1573.403	1843.913	1888.084
77	233.528	239.039	311.353	318.719	389.204	398.399	467.030	478.079	622.732	637.438	778.408	796.798	934.085	956.158	1089.762	1115.517	1245.438	1274.877	–	–	1556.817	1593.621	1868.170	1912.315
78	236.550	242.087	315.392	322.783	394.259	403.454	473.100	484.149	630.809	645.541	788.518	806.933	946.201	968.324	1103.909	1129.690	1261.618	1291.082	–	–	1577.010	1613.840	1892.427	1936.623
79	239.573	245.110	319.456	326.822	399.313	408.508	479.171	490.195	638.886	653.618	798.601	817.016	958.342	980.440	1118.057	1143.838	1277.772	1307.236	–	–	1597.203	1634.033	1916.659	1960.855
80	242.621	248.158	323.494	330.860	404.368	413.563	485.242	496.291	646.963	661.721	808.711	827.151	970.458	992.581	1132.205	1158.011	1293.952	1323.442	–	–	1617.396	1654.302	1940.916	1985.162
81	245.643	251.181	327.533	334.899	409.397	418.617	491.287	502.336	655.066	669.798	818.820	837.260	982.574	1004.697	1146.353	1172.159	1310.107	1339.596	–	–	1637.665	1674.495	1965.173	2009.394
82	248.666	254.203	331.572	338.963	414.452	423.697	497.357	508.406	663.143	677.901	828.929	847.369	994.715	1016.864	1160.501	1186.332	1326.286	1355.801	–	–	1657.858	1694.739	1989.404	2033.702
83	233.426	257.251	335.610	343.002	419.506	428.727	503.428	514.477	671.220	685.978	839.038	857.479	1006.831	1028.979	1174.648	1200.455	1342.441	1371.956	–	–	1678.051	1714.932	2013.661	2057.933
84	254.737	260.274	339.649	347.040	424.561	433.807	509.473	520.548	679.298	694.080	849.122	867.613	1018.946	1041.121	1188.796	1214.653	1358.621	1388.161	–	–	1698.244	1735.201	2037.918	2082.241
85	257.759	263.322	343.687	351.079	429.616	438.836	515.544	526.618	687.400	702.158	859.231	877.697	1031.088	1053.236	1202.919	1228.776	1374.775	1404.315	–	–	1718.488	1755.394	2062.175	2106.473
86	260.807	266.344	347.726	355.117	434.670	443.890	521.614	528.091	695.477	710.235	869.340	887.806	1043.203	1065.352	1217.066	1242.924	1390.929	1420.470	–	–	1738.681	1775.587	2086.407	2130.704
87	263.830	269.367	351.765	359.181	439.725	448.970	527.660	538.734	703.555	718.337	879.450	897.915	1055.319	1077.519	1231.214	1257.097	1407.109	1411.275	–	–	1758.874	1795.831	2110.664	2155.012
88	266.852	272.415	355.829	363.195	444.779	454.000	533.730	544.805	711.632	726.415	889.559	908.025	1067.460	1089.635	1245.362	1271.219	1423.264	1452.829	–	–	1779.067	1816.024	2134.921	2179.244
89	269.900	275.438	359.867	367.259	449.834	459.080	539.801	550.875	719.709	734.517	899.643	918.159	1079.576	1101.776	1259.510	1285.418	1439.443	1469.034	–	–	1799.260	1836.293	2159.152	2203.552
90	272.923	278.486	363.906	371.297	454.889	464.109	545.846	556.946	727.812	742.594	909.752	928.243	1091.717	1113.892	1273.658	1299.540	1455.598	1485.189	–	–	1819.529	1856.486	2183.409	2227.783
91	275.946	281.508	367.944	375.336	459.918	469.163	551.917	562.991	735.889	750.672	919.861	938.352	1103.833	1126.007	1287.805	1313.688	1471.778	1501.343	–	–	1839.722	1876.679	2207.666	2252.091
92	278.994	284.531	371.983	379.400	464.972	474.243	557.987	569.062	743.966	758.774	929.970	948.461	1115.949	1138.174	1301.953	1327.861	1487.932	1517.548	–	–	1859.915	1896.923	2231.923	2276.323
93	282.016	287.579	376.022	383.438	470.027	479.273	564.032	575.132	752.043	766.851	940.079	958.571	1128.090	1150.290	1316.076	1341.984	1504.086	1533.703	–	–	1880.108	1917.116	2256.155	2300.630
94	285.064	290.601	380.060	387.477	475.082	484.353	570.103	581.203	760.146	774.954	950.163	968.705	1140.206	1162.431	1330.223	1356.182	1520.266	1549.908	–	–	1900.301	1937.385	2280.412	2324.862
95	288.087	293.649	384.099	391.516	480.136	489.382	576.174	587.273	768.223	783.031	960.272	978.789	1152.322	1174.547	1344.371	1370.305	1536.421	1566.062	–	–	1920.545	1957.578	2304.669	2349.094
96	291.109	296.672	388.163	395.554	485.191	494.436	582.219	593.319	776.300	791.108	970.382	988.898	1164.463	1186.663	1358.519	1384.452	1552.600	1582.217	–	–	1940.738	1977.771	2335.784	2373.401
97	294.157	299.695	392.201	399.618	490.245	499.516	588.289	599.389	784.377	799.211	980.491	999.007	1176.579	1198.829	1372.667	1398.626	1568.755	1598.422	–	–	1960.931	1998.015	2353.183	2397.633
98	297.180	302.743	396.240	403.657	495.300	504.546	594.360	605.460	792.480	807.288	990.600	1009.117	1188.720	1210.945	1384.275	1412.748	1584.935	1614.576	–	–	1981.124	2018.208	2377.415	2421.941

Continued on next page.

Continued from previous page.

No. of Teeth	35 9.53 mm Pitch		40, 41 12.7 mm Pitch		50 15.88 mm Pitch		60 19.05 mm Pitch		80 25.4 mm Pitch		100 31.75 mm Pitch		120 38.10 mm Pitch		140 44.45 mm Pitch		160 50.80 mm Pitch		180 57.15 mm Pitch		200 63.50 mm Pitch		240 76.20 mm Pitch	
	Pitch Dia.	O.D.	Pitch Dia.	O.D.	Pitch Dia.	O.D.	Pitch Dia.	O.D.	Pitch Dia.	O.D.	Pitch Dia.	O.D.	Pitch Dia.	O.D.	Pitch Dia.	O.D.	Pitch Dia.	O.D.	Pitch Dia.	O.D.	Pitch Dia.	O.D.	Pitch Dia.	O.D.
99	300.203	305.765	400.279	407.695	500.355	509.626	600.405	611.530	800.557	815.391	1000.684	1019.251	1200.836	1223.086	1400.962	1426.947	1601.089	1630.782	–	–	2001.393	2038.477	2401.672	2446.172
100	303.251	308.813	404.317	411.734	505.409	514.655	606.476	617.601	808.634	823.468	1010.793	1029.335	1212.952	1235.202	1415.110	1441.069	1617.269	1646.936	–	–	2021.586	2058.670	2425.929	2470.480
101	306.273	311.836	408.356	415.798	510.464	519.735	612.546	623.672	816.712	831.571	1020.902	1039.470	1225.093	1247.369	1429.258	1455.268	1633.449	1663.141	–	–	2041.779	2078.914	2450.186	2494.712
102	309.296	314.858	412.394	419.837	515.493	524.789	618.617	629.742	824.814	839.673	1031.011	1049.579	1237.209	1259.484	1443.406	1469.415	1649.603	1679.321	–	–	2062.023	2099.107	2474.417	2518.943
103	312.344	317.906	416.433	423.875	520.548	529.844	624.662	635.813	832.891	847.750	1041.121	1059.688	1249.350	1271.626	1457.554	1483.563	1665.783	1695.501	–	–	2082.216	2119.376	2498.674	2543.251
104	315.366	320.929	420.497	427.914	525.602	534.899	630.733	641.883	840.969	855.853	1051.230	1069.797	1261.466	1283.767	1471.701	1497.736	1681.937	1711.681	–	–	2102.409	2139.569	2522.931	2567.483
105	318.389	323.977	424.536	431.952	530.657	539.953	636.803	647.954	849.071	863.930	1061.314	1079.932	1273.581	1295.908	1485.849	1511.884	1698.117	1727.886	–	–	2122.602	2159.762	2547.188	2591.791
106	321.437	327.000	428.574	436.016	535.711	545.008	642.849	654.025	857.148	872.033	1071.423	1090.041	1285.723	1308.049	1499.997	1526.057	1714.297	1744.066	–	–	2142.871	2180.006	2571.445	2616.022
107	324.460	330.048	432.613	440.055	540.766	550.062	648.919	660.070	865.226	880.110	1081.532	1100.125	1297.838	1320.165	1514.145	1540.180	1730.451	1760.195	–	–	2163.064	2200.199	2595.677	2640.254
108	327.482	333.070	436.651	444.094	545.821	555.092	654.990	666.140	873.303	888.187	1091.641	1110.234	1309.980	1332.281	1528.293	1554.328	1746.631	1776.374	–	–	2183.257	2220.468	2619.934	2664.562
109	330.530	336.093	440.690	448.132	550.875	560.172	661.035	672.211	881.405	896.290	1101.750	1120.343	1322.095	1344.422	1542.440	1568.475	1762.785	1792.554	–	–	2203.501	2240.661	2644.191	2688.793
110	333.553	339.141	444.729	452.196	555.930	565.226	667.106	678.282	889.483	904.367	1111.860	1130.452	1334.211	1356.563	1556.588	1582.649	1778.965	1808.734	–	–	2223.694	2260.905	2668.422	2713.101
111	336.575	342.163	448.793	456.235	560.984	570.281	673.176	684.352	897.560	912.470	1121.943	1140.587	1346.352	1368.704	1570.736	1596.822	1795.120	1824.939	–	–	2243.887	2281.098	2692.679	2737.333
112	339.623	345.211	452.831	460.299	566.039	575.335	679.247	690.423	905.637	920.572	1132.053	1150.722	1358.468	1380.846	1584.884	1610.995	1811.299	1841.144	–	–	2264.080	2301.291	2716.962	2761.564
113	342.646	348.234	456.870	464.312	571.094	580.390	685.292	696.493	913.740	928.649	1142.162	1160.805	1370.584	1392.961	1599.032	1625.143	1827.479	1857.299	–	–	2284.349	2321.560	2741.193	2785.872
114	345.669	351.282	460.908	468.376	576.123	585.445	691.363	702.564	921.817	936.727	1152.271	1170.915	1382.725	1405.103	1613.179	1639.291	1843.634	1873.479	–	–	2304.542	2341.753	2765.450	2810.104
115	348.717	354.279	464.947	472.364	581.177	590.448	697.433	708.558	929.894	944.728	1162.380	1180.922	1394.841	1417.117	1627.327	1653.286	1859.788	1889.455	–	–	2324.735	2361.997	2789.707	2834.411
116	351.739	357.327	468.986	476.428	586.232	595.554	703.478	714.654	937.997	952.881	1172.489	1191.082	1406.982	1429.309	1641.475	1667.535	1875.968	1905.762	–	–	2344.979	2382.190	2813.964	2858.643
117	354.787	360.350	473.024	480.492	591.287	600.634	709.549	720.750	946.074	961.009	1182.573	1201.242	1419.098	1441.501	1655.623	1681.734	1892.148	1921.993	–	–	2365.172	2402.383	2838.196	2882.875
118	357.810	363.398	477.088	484.556	596.341	605.688	715.620	726.821	954.151	968.629	1192.682	1211.351	1431.239	1453.642	1669.771	1695.907	1908.302	1938.172	–	–	2385.365	2422.652	2862.453	2907.182
119	360.832	366.446	481.127	488.569	601.396	610.743	721.690	732.866	962.228	977.163	1202.792	1221.461	1443.355	1465.758	1683.918	1710.055	1924.482	1954.352	–	–	2405.558	2442.845	2886.710	2931.414
120	363.880	369.443	485.165	492.608	606.450	615.772	727.735	738.911	970.331	985.241	1212.901	1231.544	1455.471	1477.848	1691.208	1724.152	1940.636	1970.456	–	–	2425.751	2463.038	2910.967	2955.646

CORROSION RESISTANT CHAIN PRODUCT SELECTION GUIDE

STAINLESS STEEL MATERIAL SELECTION

304 PS SERIES STAINLESS STEEL CHAIN

The primary use of 304 PS series stainless steel chain is in corrosive and/or high-temperature environments, which shortens the life of standard carbon steel roller chain. The 304 PS series stainless steel chain gives excellent resistance to corrosion and high temperatures. 304 PS series stainless steel is generally considered non-magnetic.

TABLE 53. MATERIALS OF COMPONENT PARTS

Abbrev.	Material	Link Plate	Pin	Bushing	Roller
PS	304 Series	AISI 304	AISI 304	AISI 304	AISI 304
NS	316 Series	AISI 316	AISI 316	AISI 316	AISI 316
AS	600 Series	AISI 300	600 PH[1]	600 PH[1]	600 PH[1]

[1]PH: precipitation hardened.

316 NS SERIES STAINLESS STEEL CHAIN

The primary use of 316 NS series stainless steel chain is in highly corrosive and/or extreme temperatures, which shorten the life of 304 PS series stainless steel chain.

600 AS SERIES STAINLESS STEEL CHAIN

The primary use of 600 AS series stainless steel chain is in corrosive and/or high-temperature environments, which shortens the life of standard carbon steel chain. The 600 AS series stainless steel chain has less corrosion resistance than 304 PS series stainless steel, but the hardened round parts are designed to provide for better wear life than 304 PS series stainless steel chain.

TABLE 52. PERFORMANCE OF ANTI-CORROSIVE CHAINS

Abbrev.	Chain	Corrosion Resistance	Temperature Resistance	Magnetism	Wear Resistance
NP	NP Chain	Acceptable for outdoor and decorative applications	14° F - 140° F (-10° C - 60° C) (Never use below -4° F or above 300° F)	Magnetic	Excellent
CR®	Silver Shield	Acceptable for wet outdoor environments including seawater	14° F - 140° F (-10° C - 60° C) (Never use below -4° F or above 300° F)	Magnetic	Excellent
AS	600 Series	Good for general acid, alkali and water	-40° F ~ 750° F[1] (-40° C - 400° C) [Never use above 930° F (500° C)]	Magnetic	Very Good
PS	304 Series	Good for general acid, alkali and water	-40° F ~ 750° F[1] (-40° C - 400° C) [Never use below -270° F (-150° C) or above 1300° F (700° C)]	Non-magnetic	Fair
NS	316 Series	Superior to the other stainless material	-40° F ~ 750° F[1] (-40° C - 400° C) [Never use below -270° F (-150° C) or above 1500° F (815° C)]	Non-magnetic	Fair

[1]Contact your Drives representative for temperatures below -20° F (29° C) or above 500° F (260° C).

CHAIN SELECTION

General selection is based on bearing pressure between the pin and bushing. Anti-corrosive roller chains are normally intended to be used at slow speed without lubrication. Chain selection should be made based on the bearing pressure, as shown below.

TABLE 54. ALLOWABLE BEARING PRESSURE

Chain	Max. Allowable Bearing Pressure Between Pin and Bushing	Maximum Operating Speed
304 and 316 Chain	1,420 psi (9.79 N/mm^2)	230 ft./min. (70 m/min.)
600 Chain	2,130 psi (14.68 N/mm^2)	230 ft./min. (70 m/min.)

The chain's maximum allowable load can be obtained by the formula:

Maximum allowable load = Maximum allowable bearing pressure X Bearing area between pin and bushing

TABLE 55. SERVICE FACTOR

Type of Impact	Service Factor
Smooth transmission	1.0
Transmission with some impact	1.3
Transmission with large impact	1.5

TABLE 56. SPEED COEFFICIENT

Chain Speed	Speed Coefficient
0 ~ 50 ft./min. (0 - 15 m/min.)	1.0
50 ~ 100 ft./min. (15 - 30 m/min.)	1.2
100 ~ 160 ft./min. (30 - 49 m/min.)	1.4
160 ~ 230 ft./min. (49 - 70 m/min.)	1.6

TABLE 58. TEMPERATURE FACTOR

Temperature	304 Series	316 Series	600 Series
~ -270° F (-168° C)	X	X	X
-270° F ~ -40° F (-168° C - -40° C)	1.0	1.0	X
-40° F ~ 750° F (-40° C - 400° C)	1.0	1.0	1.0
750° F ~ 930° F (400° C - 500° C)	1.2	1.0	1.8
930° F ~ 1,100° F (500° C - 593° C)	1.5	1.2	X
1,100° F ~ 1,300° F (593° C - 704° C)	1.8	1.5	X
1,300° F ~ 1,500° F (704° C - 815° C)	X	2.0	X
1,500° F ~ (815° C)	X	X	X

X = Not suggested.

Chain selection can be made using the following formula:

Maximum Chain Tension X Service Factor X Speed Coefficient X Temperature Factor ≤ Maximum Allowable Load

Maximum allowable load or maximum bearing pressure as shown above can be doubled only when the chain is used in group A of the Corrosion Resistance Guide on page 48 and properly lubricated.

TABLE 57. MAXIMUM ALLOWABLE LOAD

Chain No.	304SS (PS) and 316SS (NS)	600SS (AS)
	lbs. **kN**	lbs. **kN**
40	100 **0.44**	155 **0.69**
50	165 **0.73**	230 **1.02**
60	231 **1.03**	350 **1.56**
80	396 **1.76**	600 **2.67**
100	568 **2.53**	850 **3.78**
120	850 **3.78**	1278 **5.68**
140	1005 **4.47**	1535 **6.83**
160	1400 **6.23**	2100 **9.34**
C2040	100 **0.44**	155 **0.69**
C2050	165 **0.73**	230 **1.02**
C2060H	250 **1.11**	375 **1.67**
C2080H	415 **1.85**	625 **2.78**
C2100H	600 **2.67**	900 **4.00**
C2120H	895 **3.98**	1340 **5.96**
C2160H	1450 **6.45**	2170 **9.65**

TABLE 59. CORROSION RESISTANCE GUIDE FOR STAINLESS STEEL

Substance	Concentration	Temp. ˚F	600 SS	304 SS	316 SS
Acetic Acid	10%	68	A	A	A
Acetone		68	A	A	A
Alcohol		68	A	A	A
Aluminum Sulfate	Saturation	68	D	A	A
Ammonia Water		68	A	A	A
Ammonium Nitrate		68	A	A	A
Ammonium Sulfate	Saturation	Boiling	B	A	A
Beer		68	A	A	A
Benzene		68	A	A	A
Boric Acid	50%	Boiling	A	A	A
Butyric Acid		68	A	A	A
Calcium Chloride	Saturation	68	D	B	A
Calcium Hydroxide	20%	Boiling	A	A	A
Calcium Hypochlorite	11 – 14%	68	C	A	A
Carbon Tetrachlorite		68	A	A	A
Chlorinated Water			D	D	A
Chlorine Gas		68	D	D	B
Chromic Acid	5%	68	B	A	A
Citric Acid	50%	68	A	A	A
Coffee		Boiling	A	A	A
Creosote		68	A	A	A
Detergent – Synthetic			A	A	A
Developing Solution		68	B	A	A
Ethyl Ether		68	A	A	A
Ferric Acid	50%	68	A	A	A
Ferric Chloride	5%	68	D	B	B
Formalin	40%	68	A	A	A
Formic Acid	100%	Boiling	C	C	A
Fruit Juice		68	B	A	A
Gasoline		68	A	A	A
Glycerol		68	A	A	A
Heavy Nitric Acid	85%	68	D	A	A
Heavy Nitric Acid	65%	68	D	B	B
Honey			A	A	A
Hydrogen Peroxide	30%	68	B	A	A
Hydrogen Sulfide (dry)			A	A	A
Hydrogen Sulfide (wet)			D	D	D
Hydroxbensene		68	A	A	A
Kerosene		68	A	A	A
Ketchup		68	A	A	A
Lactic Acid	10%	68	B	A	A
Lard			A	A	A
Linseed Oil	100%	68	B	A	A
Malic Acid	50%	Boiling	A	A	A
Mayonnaise		68	B	A	A
Milk		68	A	A	A
Nitric Acid	Saturation	Boiling	B	A	A

Substance	Concentration	Temp. ˚F	600 SS	304 SS	316 SS
Oil (Plant, Mineral)		68	A	A	A
Oleic Acid		68	A	A	A
Oxalic Acid	10%	68	B	A	A
Paraffin		68	A	A	A
Petroleum		68	A	A	A
Phosphate			A	A	A
Phosphoric Acid	5%	68	B	A	A
Phosphoric Acid	10%	68	B	B	B
Picric Acid	Saturation	68	A	A	A
Potassium Bichromate	10%	68	A	A	A
Potassium Chloride	Saturation	68	B	A	A
Potassium Hydroxide	20%	68	A	A	A
Potassium Nitrate	25%	68	A	A	A
Potassium Nitrate	25%	Boiling	D	A	A
Potassium Permanganate	Saturation	68	A	A	A
Sal Ammoniac	50%	Boiling	C	B	A
Seawater		68	C	B	A
Soap and Water Solution		68	A	A	A
Sodium Carbonate	Saturation	Boiling	A	A	A
Sodium Chloride	5%	68	B	A	A
Sodium Cyanide		68	D	A	A
Sodium Hydrocarbonate		68	A	A	A
Sodium Hydroxide	25%	68	A	A	A
Sodium Hypochlorite	10%	68	D	D	A
Sodium Perchlorate	10%	Boiling	D	A	A
Sodium Sulfate	Saturation	68	A	A	A
Sodium Thiosulfate	25%	Boiling	A	A	A
Soft Drink		68	A	A	A
Sugar Solution		68	A	A	A
Sulfur Dioxide		68	C	A	A
Sulfuric Acid	5%	68	D	D	A
Syrup			A	A	A
Tartaric Acid	6%	68	A	A	A
Turpentine		95	A	A	A
Varnish			A	A	A
Vegetable Juice		68	A	A	A
Vinegar		68	C	B	A
Water			A	A	A
Whiskey		68	A	A	A
Wine		68	A	A	A
Zinc Chloride	50%	68	D	B	B
Zinc Sulfate	25%	68	A	A	A

A = High resistance
B = Partial resistance
C = Satisfactory resistance
D = Not suggested

CONVEYOR CHAIN SELECTION GUIDE STEPS

The ANSI single- and double-pitch roller chain is widely used for conveyor service.

The following procedure is useful for economical and quick chain selection.

STEP 1: Confirm the operating conditions of the conveyor.

STEP 2: Tentatively select the chain size.

STEP 3: Calculate the design chain tension (actual chain tension).

STEP 4: Calculate the required power.

STEP 5: Verify the chain load.

STEP 6: Verify the allowable roller load.

STEP 1: CONFIRM THE OPERATING CONDITIONS OF THE CONVEYOR

The following information is needed to design a chain conveyor.

- Type of conveyor (slat conveyor, bucket elevator, etc.).
- Method of chain travel (horizontal, inclined or vertical conveyor).
- Type, weight and size of materials to be conveyed.
- Weight of materials to be transported per foot of conveyor length.
- Conveyor speed.
- Conveyor length.
- Lubrication.
- Considerations for special environments.

STEP 2: TENTATIVELY SELECT THE CHAIN SIZE

To tentatively select the chain size, estimate the chain tension (P) by the following formula. A chain with an allowable load equal to or over the below calculated chain tension may be tentatively selected.

$$P\ (lbs.) = M_T \times f \times k_1 \qquad P_M\ (kN) = \frac{9.81 \times M_{MT} \times f \times k_1}{1{,}000}$$

Where:

P = Chain pull (lbs., kN)

M_T = Total weight of material conveyed (lbs. or Kg)

f = Coefficient of friction, sliding and/or rolling (F_R f_s tables 60, 61, 62 and 64 on page 51)

k_1 = Chain speed coefficient (table 66 on page 52)

STEP 3: CALCULATE DESIGN CHAIN TENSION

Next, the chain tension should be calculated using the actual weight of the conveyor chain and material conveyed.

CONVEYOR CHAIN PULL FORMULAS

Horizontal

Material is fully supported by the chain

Inch $P = (2.1W + M)f_M C$
Metric $P = (2.1W + M)f_M C / 1{,}000$

Material is moved but not supported by the chain

Inch $P = [(2.1Wf_M + Mf_w) C + J]$
Metric $P = [(2.1Wf_M + Mf_w) C + J] / 1{,}000$

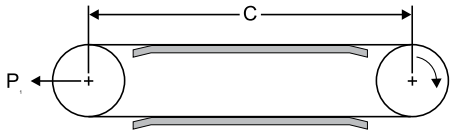

Fig. 3. Horizontal - return side supported illustration.

Vertical

Inch $P = (W + M)C + T$
Metric $P = [(W + M)C + T] / 1{,}000$

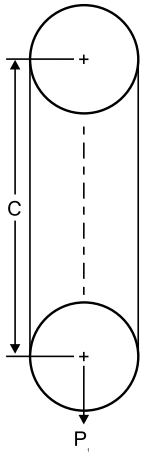

Fig. 4. Vertical.

Inclined

Material is fully supported by the chain

Inch $P = (2.1W + M)f_M \cos\alpha\ C + (C\ M \sin\alpha) + J$
Metric $P = [(2.1W + M)f_M \cos\alpha\ C + (C\ M \sin\alpha) + J] / 1{,}000$

NOTE: When (WfrCOSa - WSINa) C is positive, multiply quantity by 1.1 to account for tail shaft friction.

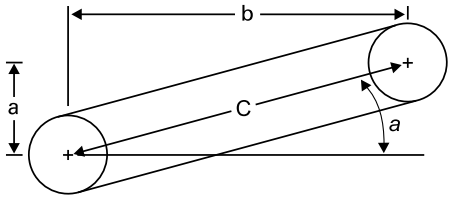

Fig. 5. Inclined - return side supported illustration.

Material is moved but not supported by the chain

Inch $P = [(f_M W + f_W M)\cos\alpha + (W + M)\ \sin\alpha] C + (W f_M \cos\alpha - W \sin\alpha)C + J$
Metric $P = \{[(f_M W + f_W M)\cos\alpha + (W + M)\ \sin\alpha] C + (W f_M \cos\alpha - W \sin\alpha)C + J\} / 1{,}000$

Additional chain pull material sliding against sideboards

Inch & Metric $J = Ch^2/R$

Where:
P = Total conveyor pull (lbs, kN)
W = Weight of chain, attachment, slats, etc. per foot or meter (lbs/ft, kg/m)
M = Weight of material per foot or meter on the conveyor (lbs/ft, kg/m)
f_M = Friction coefficient for chain (it may be either f_r or f_s whichever applies)
f_W = Friction coefficient for material sliding
f_r = Friction coefficient of chain rolling
f_s = Friction coefficient of chain sliding on supports
C = Length of conveyor (ft, m)
T = Take-up force (lbs, kg)
J = Additional chain pull (lbs, kg)
h = Height of material (in, cm)
R = Variable factor for different materials

TABLE 60. COEFFICIENT OF ROLLING FRICTION (f_R)

Type of Roller	Dry	Lubricated
Oversized Roller	0.12	0.08
Standard Roller	0.21	0.14

Where: $f_R = f_s \frac{d_a}{d_r}$

d_a = bushing outside diameter

d_r = roller outside diameter

TABLE 61. METAL ROLLERS

	Dry	Lubricated
Cast Rollers	0.5	0.4
Steel Rollers	0.4	0.3

TABLE 62. COEFFICIENT OF SLIDING FRICTION (f_S)

Material	Coefficient	
	Dry	Lubricated
Steel on steel	0.33	0.20
Cast iron or cast steel on same surface	0.50	0.40
Steel on bronze	–	0.15
Steel on hardwood	0.35	0.25
Cast iron or cast steel on hardwood	0.44	–

TABLE 64. COEFFICIENT OF SLIDING FRICTION OF CONVEYED MATERIAL (f_S)

Material	Coefficient	
	Dry	Lubricated
Coal on steel	0.55	–
Crushed stone or sand on steel	0.70	–
Cement on steel	0.80	–
Wood on wood	0.55	–
Corn on steel	0.30	–
Soybeans on steel	0.41	–
Oats on steel	0.35	–
Wheat on steel	0.43	–
Salt on steel	0.70	–

TABLE 65. R FACTOR VALUES

Material	"R" Imperial	"R" Metric
Coal	14.0	60.7
Coke	35.0	151.7
Limestone	7.5	32.5
Gravel	7.0	30.3
Sand	5.5	23.8
Ashes	14.0	60.7

Additional pull on conveyor (J) material sliding against sideboards

TABLE 63. VARIABLE FACTOR FOR DIFFERENT MATERIALS

Material	R
Coal	14.0
Coke	35.0
Limestone	7.5
Gravel	7.0
Sand	5.5
Ashes	35.0

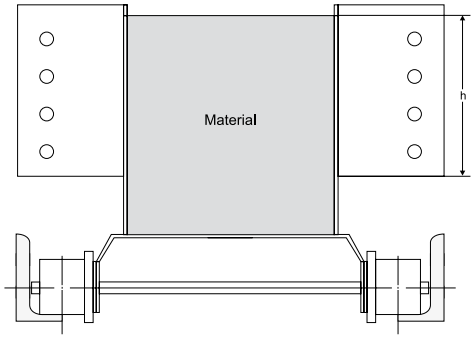

Fig. 6. CROSS-SECTION OF MATERIAL CONVEYED IN A TROUGH

$J = Ch^2/R$

Where:

h = Height of material in inches

R = Variable factor for different materials (see table 63)

C = Length of conveyor in feet

STEP 4: CALCULATE THE REQUIRED POWER

Calculate the required power to drive the conveyor from the following formula.

HORIZONTAL AND/OR INCLINED CONVEYOR

$$H = \frac{P \times S}{33{,}000} \qquad H_M = \frac{P_M \times S_M}{60}$$

VERTICAL CONVEYOR

$$H = \frac{M \times C \times S}{33{,}000} \qquad H_M = \frac{M_M \times C_M \times S_M}{60}$$

Where: $S = \frac{C \times N_s \times n}{12}$ (ft./min.) $\qquad S_M = \frac{C_M \times N_s \times n}{1{,}000}$ (M/min.)

H = Horsepower
S = Chain speed (ft./min., M/min.)
M = Material weight (lbs./ft., kg/M)
C = Sprocket center distance (in., mm)
n = Small sprocket speed (RPM)
N_s = Number of teeth – small sprocket
C = Chain pitch (in., mm)
P = Chain pull (lbs., kN)

STEP 5: VERIFY THE CHAIN

Multiply the chain tension (P) by the chain speed coefficient (k_1) listed in table 66, and verify the following formula.

$$P \times k_1 \leq \text{Max. allowable load of the chain}$$

When the design chain tension ($P \times k_1$) is over the allowable load or much less than it, try the same steps again for the next bigger or smaller chain size to select a more suitable chain.

TABLE 66. CHAIN SPEED COEFFICIENT (k_1)

Chain Speed ft./min. (m/min.)	Speed Factor (k_1)
0 ~ 50 (0 - 15)	1.0
50 ~ 100 (15 - 30)	1.2
100 ~ 160 (30 - 50)	1.4
160 ~ 230 (50 - 70)	1.6
230 ~ 300 (70 - 90)	2.2
300 ~ 360 (90 - 110)	2.8
360 ~ 400 (110 - 120)	3.2

STEP 6: VERIFY THE ALLOWABLE ROLLER LOAD

When the load is carried on the rollers, the total weight of the chain and load per roller should not exceed the allowable roller load shown in table 67.

TABLE 67. ALLOWABLE ROLLER LOAD [LBS./ROLLER (KG/ROLLER), CARBON STEEL ONLY]

Chain	Size	Large Roller	Standard Roller
C2040	40	143 (65)	33 (15)
C2050	50	220 (100)	44 (20)
C2060H	60	350 (160)	66 (30)
C2080H	80	590 (268)	120 (54)
C2100H	100	880 (400)	180 (82)
C2120H	120	1320 (600)	260 (118)
C2160H	160	2160 (980)	430 (195)

NOTE: Large rollers are available only for double-pitch roller chain.

POINTS TO CONSIDER

- For long conveyors, use take-up devices to eliminate chain slack.

  Take-up stroke = (center distance between sprockets x 0.02) + catenary sag allowance

- Chain must always be engaged with at least three sprocket teeth.
- When two or more strands of conveyor chain operate together, all the sprocket teeth on the head shaft should be aligned. The chain may be matched at the factory for uniform length and attachment alignment for accurate multiple-strand operation.

TABLE 68. CHAIN AND ROLLER FEATURES THAT MAY HELP IN SELECTION

Oversize R Roller Type	Standard S Roller Type	
Chain Rolling (Horizontal or Vertical)	Chain Rolling	Chain Sliding (Double-Pitch Chain)
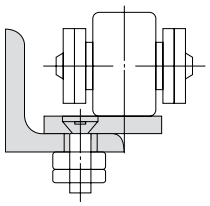	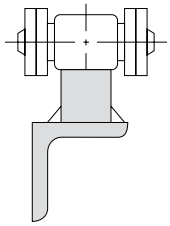	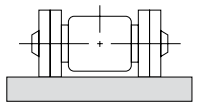

• Heavy in chain weight
• Greater allowable roller load
• Less roller wear
• Smooth operation
• Less vibration
• Lower friction and less power required
• Generally used for:
  • Conveyor lengths more than 35 ft. (11 m).
  • Conveyor speeds more than 70 ft./min. (21 m/m).
	• Lightweight
	• Lower allowable roller load
	• Generally used for:
	  • Conveyor lengths more than 35 ft. (11 m).
	  • Conveyor speeds more than 70 ft./min. (21 m/m).
		• Suitable for impact and dirty conditions
		• Economical
		• Impact resistant
		• Greater power required

MATCHING AND TAGGING OF CHAINS

Class 1 – Tag

Chains are not measured, but the chains (strands, sections or both) will be tagged: LH, RH, Lead End, etc., and/or tied together as requested.

Class 2 – Measure, Match & Tag

All chain strands[1] are assembled as multiple sections of 10 feet or less[2], measured, and tagged with that measurement. These sections are arranged to incorporate a parallel and consecutive match.

- Parallel: The sections are assembled such that sections directly across from each other have a difference of less than 0.030 in.
- Consecutive: The chains are arranged such that a "short" section is not directly assembled to a "long" section. This results in having a difference between matched strands (for any given total lengths) of less than 0.030 in.

Class 3 – Measure, Match & Tag (Customer Specified Match)

All chain strands[1] are assembled as multiple sections of 10 feet or less[2], measured, and tagged with that measurement. These sections are arranged to incorporate a parallel and consecutive match.

- Parallel: The sections are arranged such that sections directly across from each other have a difference of less than a Class 2 match.
- Consecutive: The chains are arranged such that a "short" section is not directly assembled to a "long" section. This results in having a difference between matched strands (for any given total lengths) of less than a Class 2 match.

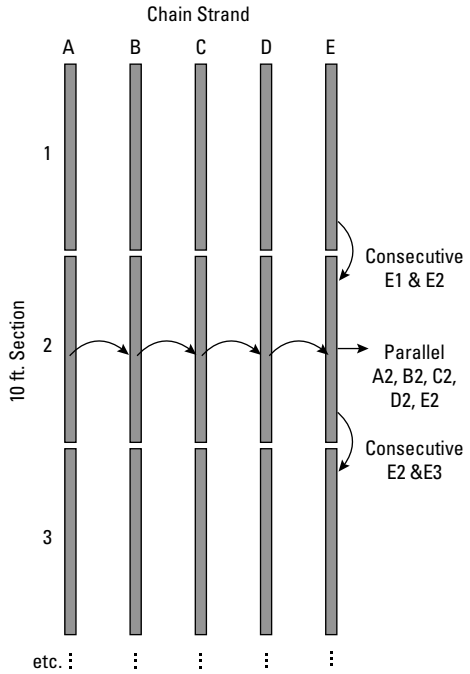

Fig. 7. Matching and tagging of chains.

All match/tag chains are within ANSI standard length tolerances. Matching measured sections (10 feet or shorter sections) ensures that attachments are aligned across the parallel chain strands. This optimized match also results in parallel strand lengths being extremely close to one another.

All match/tag chains are built using same batch parts to ensure the least amount of variance between strands. Reference to "short" or "long" sections simply refers to the minimum and maximum side of that particular batch length range.

[1] Strand: total chain length
[2] Section: part of the total chain length – 10 ft. long or less
[3] Customer specified

INSTALLATION AND MAINTENANCE

SPEED RATIO AND CHAIN WRAP

The speed ratio of roller chain can range up to 7:1 under normal operating conditions. However, a speed ratio of 10:1 is possible if the speed is very slow. Chain wrap on the small sprocket must be at least 120 degrees.

DISTANCE BETWEEN SHAFTS

Sprockets can be separated by any distance as long as their teeth do not touch. Optimum distance is 30 to 50 times the pitch of the chain being used, except when there is a pulsating load. In such cases, the distance should be up to 20 times the pitch of the chain used.

POSITION

Roller chain is ideally installed in a horizontal position. If the chain drive must be in a vertical position, the wear life of the chain will likely be reduced because of the effect of gravity.

SLACK

Generally, the slack of a roller chain should be on the lower side (see fig. 8). Adequate slack (SS) is about 4 percent of the span for normal drives. In the following cases, the slack should be about 2 percent of the span:

- Vertical drive or close to vertical drive.
- Center distance between two shafts is greater than 3 ft.
- Chain is operated under heavy load and high frequency of on and off drive.
- Direction of the drive is often changed.

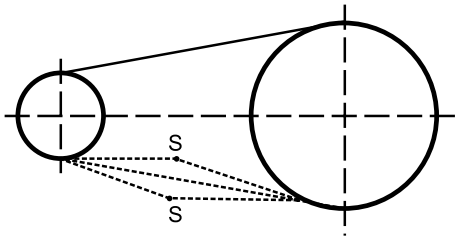

Fig. 8. Chain tension.

POSITION OF SPROCKET

The two shafts should be parallel and preferably in a horizontal position. Sprockets should be firmly installed. See figs. 9 and 10.

Use a straight edge to check that the two sprockets are installed along the same horizontal plane.

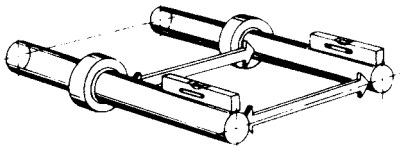

Fig. 9. Aligning shaft.

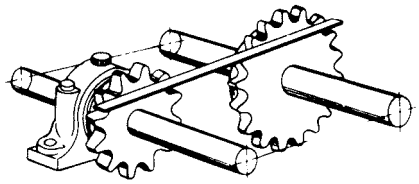

Fig. 10. Aligning sprockets.

TABLE 69. SUGGESTED POSSIBLE MID-SPAN MOVEMENT

Drive Center-Line	Tangent Length Between Sprockets in in. (cm)					
	10 **(25)**	20 **(51)**	30 **(76)**	50 **(127)**	70 **(178)**	100 **(254)**
	in. **(mm)**	in. **(mm)**	in. **(mm)**	in. **(mm)**	in. **(mm)**	in. **(mm)**
Horizontal to 45˚	0.4-0.6 **(10-15)**	0.8-1.2 **(20-30)**	1.2-1.8 **(30-46)**	2.0-3.0 **(51-76)**	2.8-4.2 **(71-107)**	4.0-6.0 **(102-152)**
45˚ to vertical	0.2-0.3 **(5-8)**	0.4-0.6 **(10-15)**	0.6-0.9 **(15-23)**	1.0-1.5 **(25-38)**	1.4-2.1 **(36-53)**	2.0-3.0 **(51-76)**

ARRANGEMENTS

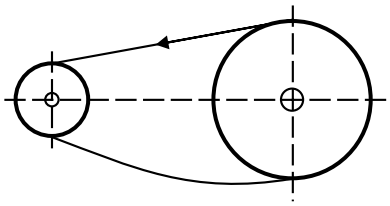

Fig. 11. Satisfactory arrangement for drives with short centers.

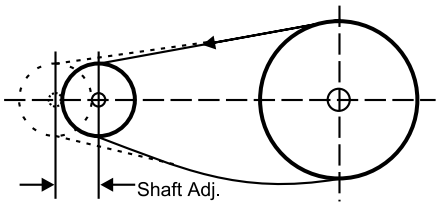

Fig. 12. It is best to have one shaft adjustable, as shown directly above, or use a chain tightener, as shown in lower arrangement.

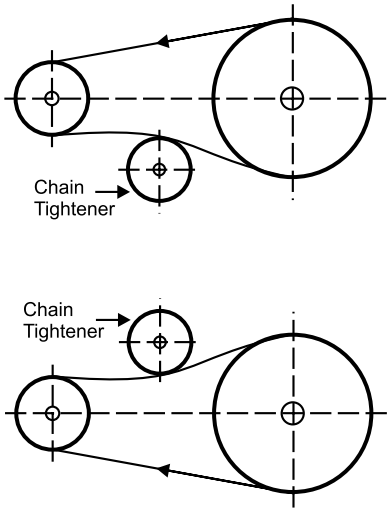

Fig. 13. When the slack side is on top, some means must be provided to adjust the slack-side tension.

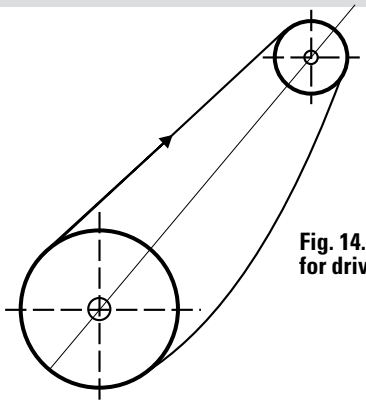

Fig. 14. Satisfactory arrangement for drives with short centers.

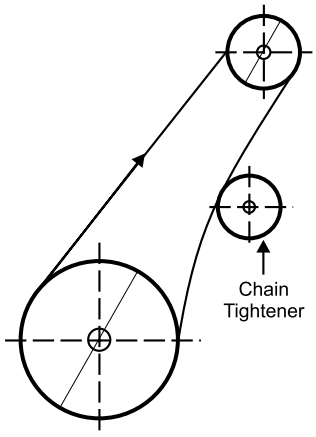

Fig. 15. When the slack side is on top, some means must be provided to adjust the slack-side tension.

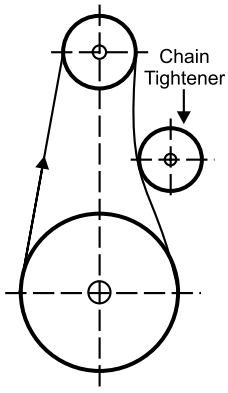

Fig. 16. The best arrangement for vertical drives where means for adjusting slack is possible.

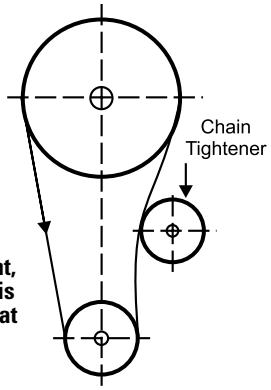

Fig. 17. This arrangement, while sometimes used, is not as satisfactory as that shown above.

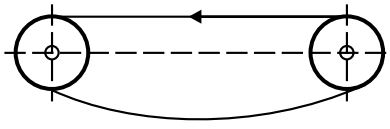

Fig. 18. Unsatisfactory arrangement (no adjustment is provided).

LUBRICATION

One of the most important factors in getting the best possible performance out of your roller chain is proper lubrication. Each joint in a roller chain is a journal bearing, so it is essential that it receives an adequate amount of proper lubricant to achieve maximum wear life. No matter how well a transmission system is designed, if it is not properly lubricated, it's service life will be shortened.

Wear between the pin and bushing causes the roller chain to elongate. These parts should, therefore, be well lubricated. The gap between the pin link plate and the roller link plate on the slack side of the chain should be filled with oil. This oil forms a film that reduces wear on the pin and bushing, thus increasing the chain's service life. It also reduces noise and acts as a coolant when the chain runs at high speeds.

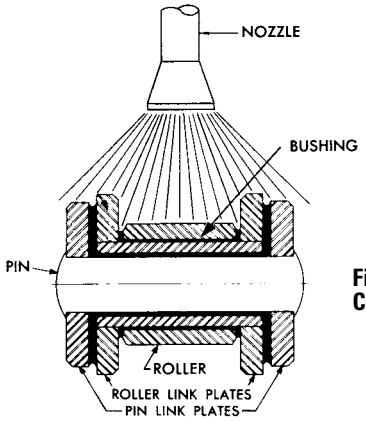

Fig. 19.
Chain lubrication.

SUGGESTED LUBRICANTS

Only high-quality oil should be used to lubricate the roller chain. Neither heavy oil nor grease is suitable. The viscosity of the oil used will depend on the chain size, chain speed and ambient temperature. The lubricants suggested for specific temperature ranges are given in the table to the right.

The number of supply holes should equal Z+1 where Z is the number of strands of chain. The amount of oil supplied to each hole is constant.

Regardless of the lubricating system used, the roller chain must be cleaned periodically. Examine the pin and bushing after removing the chain. Any damage or reddish-brown color on their surfaces could indicate that the system is not being adequately lubricated.

TABLE 70. TEMPERATURE AND LUBRICATION

Temperature Degree °F (°C)	Suggested Lubricant
-20 – +20 (-29 to -7)	SAE 10
20 – 40 (-7 to 5)	SAE 20
40 – 100 (5 to 38)	SAE 30
100 – 120 (38 to 49)	SAE 40
120 – 140 (49 to 60)	SAE 50

TABLE 71. SPEED AND LUBRICATION

Chain Speed	Chain Number			
	60 and under	80 – 100	120 – 140	160 and over
ft/min. M/min.	**gal./min.** liter/min.	**gal./min.** liter/min.	**gal./min.** liter/min.	**gal./min.** liter/min.
1,600 ~ 2,600 490 ~ 800	**0.26** 1.0	**0.40** 1.5	**0.53** 2.0	**0.66** 2.5
2,600 ~ 3,600 800 ~ 1,100	**0.53** 2.0	**0.66** 2.5	**0.79** 3.0	**0.92** 3.5
3,600 ~ 4,600 1,100 ~ 1,400	**0.79** 3.0	**0.92** 3.5	**1.06** 4.0	**1.19** 4.5

LUBRICATION SYSTEMS

We recommend one of the following five lubricating systems:

MANUAL LUBRICATION

Oil is applied with an oil filler or brush in the gap between the pin link and roller link on the slack side of the chain. It should be applied about every eight hours or as often as necessary to prevent the bearing area of the chain from becoming dry.

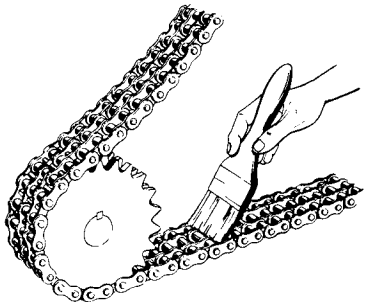

Fig. 20.
Manual lubrication.

DRIP LUBRICATION

Use a simple casing. The oil is supplied by drip feed. Each strand of chain should ordinarily receive five to 20 drops of oil per minute, according to increases in the chain speed.

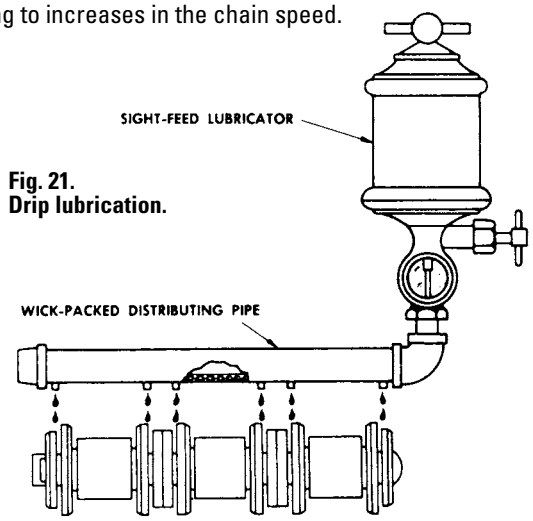

Fig. 21.
Drip lubrication.

⚠ WARNING

Failure to observe the following warnings could create a risk of death or serious injury.

Follow your lock-out tag-out and power off procedures before lubricating or servicing a chain system.

OIL BATH LUBRICATION

Use a leak-proof casing. The chain dips into the oil at the bottom of the casing. The sprocket should dip into the oil approximately ½ in. If the sprocket is immersed more than ½ in., too much heat is generated.

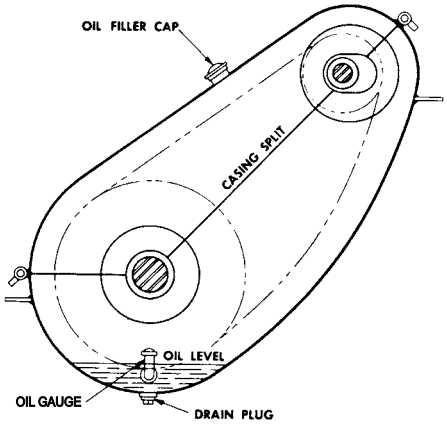

Fig. 22. Oil bath lubrication.

LUBRICATION BY SLINGER DISC

Use a leak-proof casing. The chain does not need to dip into the oil at the bottom of the casing. The slinger disc should dip into the oil from ½ in. to 1 in.

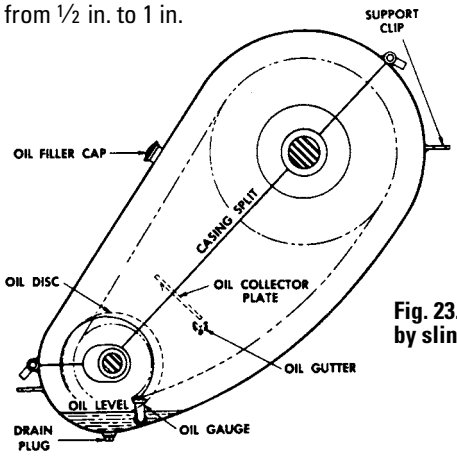

Fig. 23. Lubrication by slinger disc.

LUBRICATION USING A PUMP

Use a leak-free casing. A pump is used to circulate the oil, which is then cooled. See table 71 on page 56 for lubrication supply holes.

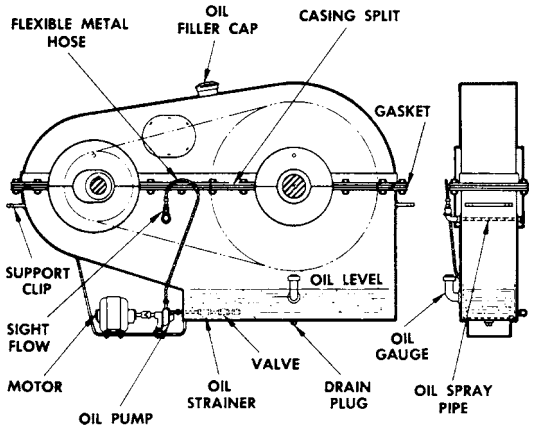

Fig. 24. Lubrication using a pump.

LUBRICATION

INTERLUBE A TIMKEN BRAND ROTALUBE SYSTEM

The Rotalube chain lubrication system is a unique and precise method of applying consistent amounts of oil on a chain as it is in production. The Rotalube is a controlled applicator that maintains needed lubrication whatever the condition of the chain.

Automatic lubrication systems are designed to apply regular and consistent amounts of oil to single or multiple Rotalubes in diverse industrial applications such as:

- Food industry
- Automobile industry
- Steel industry
- Fiberglass industry
- Cement industry
- Agricultural
- Packaging machinery

Standard Rotalube Applications

At present, common systems used to lubricate chains are:

- Drip feed
- Manual application
- Brush application
- Spit/spray

Any system that delivers lubrication is better than none at all, but the Rotalube system can extend chain life and help reduce maintenance costs, which is an important benefit for industrial applications in the competitive global marketplace.

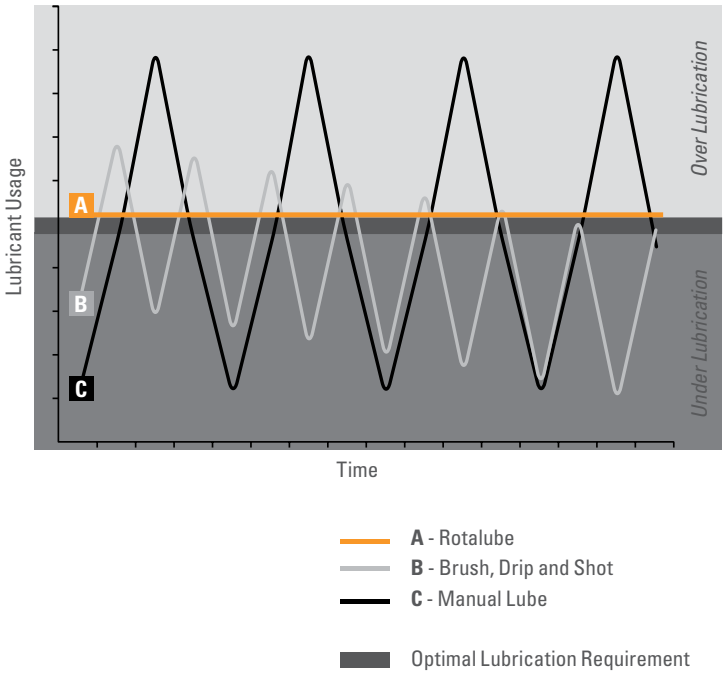

Fig. 25. Effectiveness of oil applications.

Contact Rotalube to learn more at 1-888-488-5823 or http://www.interlubesystems.co.uk/contact.php.

Specifications

Lubricant Viscosity: Max 120 Cst and Min 68 Cst
Material: Steel Nickel Plated Hub and Nylatrone Sprocket
Max Speed: 50 m (164 feet) per min.
Air Pressure: 5 to 20 PSI
Temp Max: 70º C (158º F)
Temp Min: -20º C (-68º F)
Inlets: 1/8 in. NPT (F) x 2. Lubricant can be fed from both sides or just one side, this is installation specific.

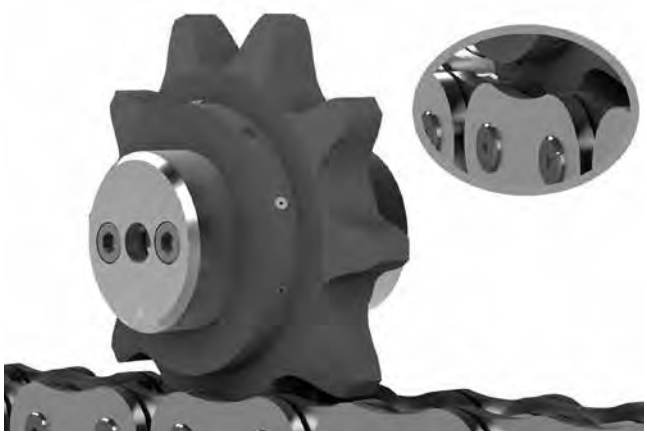

Fig. 26.

TABLE 72. STANDARD ROTALUBE APPLICATORS (SIMPLEX) WITH BRASS INSERTS

Part No	Size	BS	ANSI	A	B	C
RL-08B1	1/2 in.	✔		26.9	48.8	89.2
RL-10B1	5/8 in.	✔		28.3	51.5	91.4
RL-12B1	3/4 in.	✔		29.5	54.0	91.6
RL-16B1	1 in.	✔		35.9	66.8	98.1
RL-ASA40-1	1/2 in.		✔	27.2	49.3	89.2
RL-ASA50-1	5/8 in.		✔	29.0	53.0	91.4
RL-ASA60-1	3/4 in.		✔	31.4	57.7	91.6
RL-ASA80-1	1 in.		✔	34.6	64.2	98.1
RL-ASA100-1 1 1/4 in.	1 1/4 in.		✔	37.65	70.15	102.7
RL-ASA120-1 1 1/2 in.	1 1/2 in.		✔	43.5	82.15	111.4

Note: BS = British Standard, ANSI = American National Standards Institute
A, B and C dimensions are in millimeters.

TABLE 73. STANDARD ROTALUBE APPLICATORS (SIMPLEX) WITHOUT BRASS INSERTS

Part No	Size	BS	ANSI	A	B	C
RL-08B1W	1/2 in.	✔		26.9	48.8	89.2
RL-10B1W	5/8 in.	✔		28.3	51.5	91.4
RL-12B1W	3/4 in.	✔		29.5	54.0	91.6
RL-16B1W	1 in.	✔		35.9	66.8	98.1
RL-ASA40-1W	1/2 in.		✔	27.2	49.3	89.2
RL-ASA50-1W	5/8 in.		✔	29.0	53.0	91.4
RL-ASA60-1W	3/4 in.		✔	31.4	57.7	91.6
RL-ASA80-1W	1 in.		✔	34.6	64.2	98.1
RL-ASA100-1W 1 1/4 in.	1 1/4 in.		✔	37.65	70.15	102.7
RL-ASA120-1W 1 1/2 in.	1 1/2 in.		✔	43.5	82.15	111.4

Note: BS = British Standard, ANSI = American National Standards Institute
A, B and C dimensions are in millimeters.

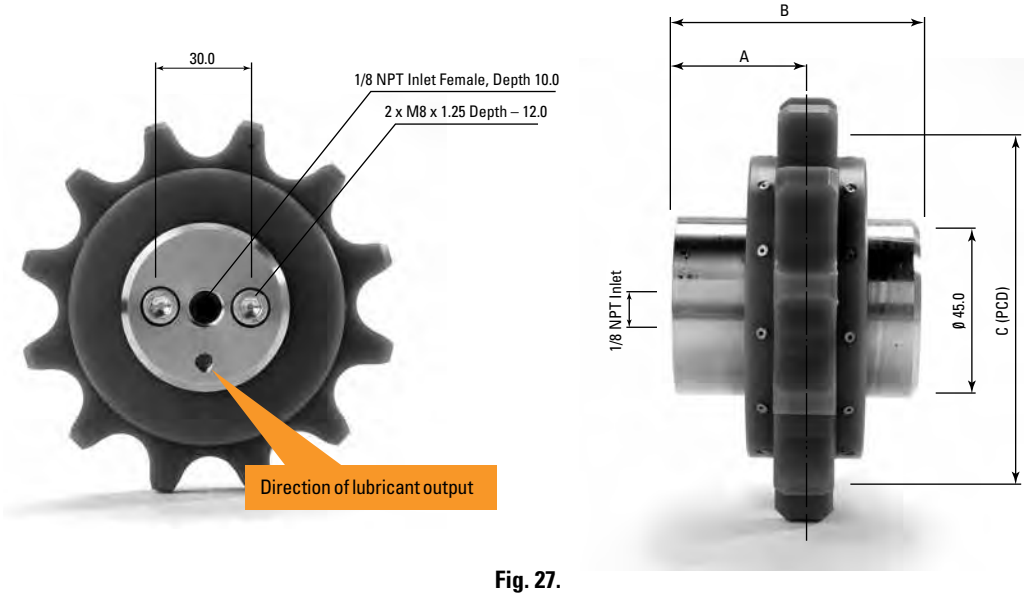

Fig. 27.

Contact Rotalube to learn more at 1-888-488-5823 or http://www.interlubesystems.co.uk/contact.php.

ROTALUBE LUBRICATION KIT FOR ONE STANDARD ROTALUBE

Fig 28. Suggested pump element positions

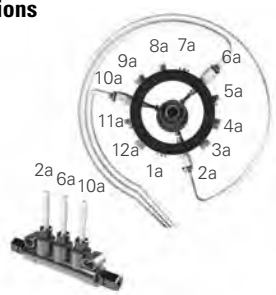

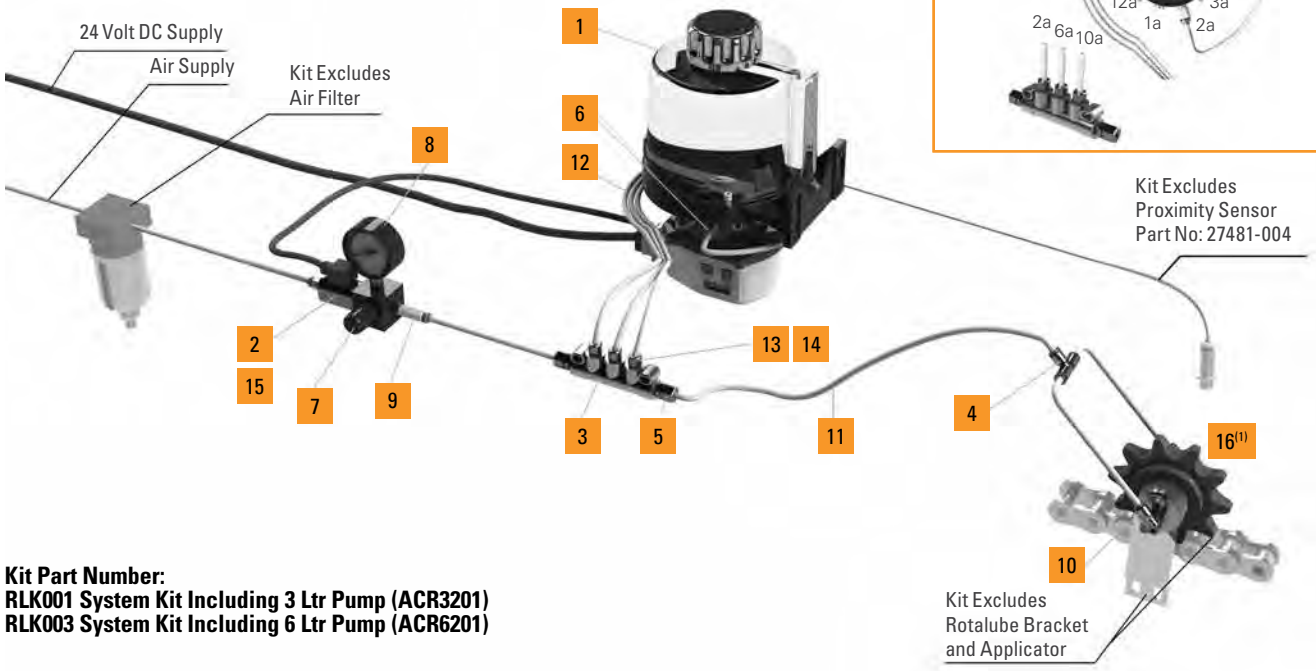

Kit Part Number:
RLK001 System Kit Including 3 Ltr Pump (ACR3201)
RLK003 System Kit Including 6 Ltr Pump (ACR6201)

TABLE 74. ROTALUBE LUBRICATION KITS FOR ONE STANDARD ROTALUBE

Item	Part No	Description	Qty
1a 1b	ACR3021 ACR6021	3 L Rotalube Pump fitted with 3 pump elements and 9 plugs as standard – 24v DC **-or-** 6 L Rotalube Pump fitted with 3 pump elements and 9 plugs as standard – 24v DC	1
2	83416-452	Solenoid Valve	1
3	MMS5	Manifold	1
4	25478-101	6 mm O.D. Equal Tee	1
5	25477-926	6 mm O.D. Straight Conn M8x1	2
6	78036	0.040 cc Pumping Unit	3
7	25851-200	Air Reg 1/4 in. BSPF + Bracket	1
8	25873-220	1/8 in. BSPT 0-40PSI Pressure Gauge	1
9	25477-767	6 mm O.D. Straight Connector 1/4 in. BSP	1
10	25478-171	6 mm O.D. Swivel 1/8 in. NPT	2
11	25210-410	6 mm O.D. Nylon Tube Unfilled	10mtr
12	25210-411	4 mm O.D. Nylon Tube Unfilled	3mtr
13	LM304	4 mm O.D. Sleeve Nut	3
14	LM204	4 mm O.D. Cone	3
15	25471-121	1/4 in. BSP Male Male Nipple	1
16	25227-590	Blanking Plug 1/8 in. NPT	1

(1)Blanking plug required only if one of the inlets is inaccessible

Contact Rotalube to learn more at 1-888-488-5823 or http://www.interlubesystems.co.uk/contact.php.

ROTALUBE LUBRICATION KIT FOR TWO STANDARD ROTALUBE

Fig 29. Suggested pump element positions

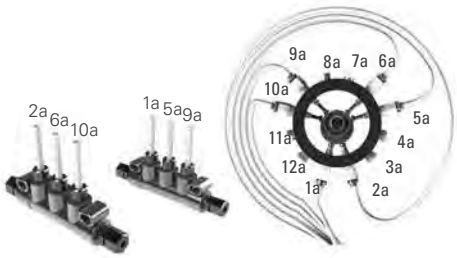

Kit Part Number:
RLK002 System Kit Including 3 Ltr Pump (ACR3201)
RLK004 System Kit Including 6 Ltr Pump (ACR6201)

TABLE 75. ROTALUBE LUBRICATION KITS FOR TWO STANDARD ROTALUBES

Item	Part No	Description	Qty
1a 1b	ACR3021 ACR6021	3 L Rotalube Pump fitted with 3 pump elements and 9 plugs as standard – 24v DC **-or-** 6 L Rotalube Pump fitted with 3 pump elements and 9 plugs as standard – 24v DC	1
2	83416-452	Solenoid Valve	1
3	MMS5	Manifold	2
4	25478-101	6 mm O.D. Equal Tee	3
5	25477-926	6 mm O.D. Straight Conn M8x1	4
6	78036	0.040 cc Pumping Unit	6
7	25851-200	Air Reg 1/4 in. BSPF + Bracket	2
8	25873-220	1/8 in. BSPT 0-40PSI Pressure Gauge	2
9	25477-767	6 mm O.D. Straight Connector 1/4 in. BSP	5
10	25478-171	6 mm O.D. Swivel 1/8 in. NPT	4
11	25210-410	6 mm O.D. Nylon Tube Unfilled	20mtr
12	25210-411	4 mm O.D. Nylon Tube Unfilled	6mtr
13	LM304	4 mm O.D. Sleeve Nut	6
14	LM204	4 mm O.D. Cone	6
15	25471-121	1/4 in. BSP Male Male Nipple	2
16	25857-105	1/4 in. BSP Female Female Check Valve	2
17	25227-590	Blanking Plug 1/8 in. NPT	2

(1)Blanking plug required only if one of the inlets is inaccessible

Contact Rotalube to learn more at 1-888-488-5823 or http://www.interlubesystems.co.uk/contact.php.

STANDARD SYSTEM OPERATION

The ACR Rotalube pump has an adjustable controller to control both the 'RUN' and 'DELAY' periods of the pump and solenoid, with both the periods being defined either in terms of time or pulses.

The 'RUN' period in time mode can be set between one minute and 99 minutes in one-minute steps. In pulse mode, the run period can be set between 10 and 9990 pulses in steps of 10 pulses.

The 'DELAY' period in time mode can be set between one-minute and 100 hours in one minute steps. In pulse mode the delay period can be set between 10 and 9990 pulses in steps of 10 pulses.

The controller energizes the solenoid output five seconds before starting the pump and this output remains energized for five seconds after the pump has finished running.

The pump has two alarm modes. The first is triggered if the controller senses that the motor has failed. The second is triggered when the run time is set to pulse mode and the controller does not see the full number of pulses specified within 110 minutes. This alarm can be reset by pressing the manual override button.

ACR Rotalube Pump

The ACR lubrication pump is specifically designed to apply small and consistent amounts of oil to the Rotalube. Fully adjustable run and dwell functions.

Specifications

Pump Voltage: 24v DC
IP Rating: IP 67
Current: 2 Amp Max
Reservoir: 3 and 6 Litre Reservoirs
Maximum Outlets:

12 – Standard ACR pump for single rotalube system is fitted with 3x elements (78036).

Standard ACR pump for double kits fitted with 6x elements as standard (78036).

Maximum Viscosity: 120 Cst
Minimum Viscosity: 68 Cst
Maximum Ambient Temp: +65° C (149° F)
Minimum Ambient Temp: -35° C (-31° F)



Fig. 30. ACR6 Pump



Fig. 31. ACR3 Pump

TABLE 76. PUMP ELEMENTS

Profile	Color	Stroke Output (cc)	Part No (Ø4 Tube)
 Color Indicator	Red	0.010	78033
	Green	0.015	78034
	Yellow	0.025	78035
	Blue	0.040	78036
	Grey	0.060	78037
	Black	0.100	78038

The three blue elements give an output of 0.12 cc per minute.
This can be altered to increase or decrease the lubricant output.

Contact Rotalube to learn more at 1-888-488-5823 or http://www.interlubesystems.co.uk/contact.php.

ROTALUBE APPLICATIONS STANDARD AND CUSTOM

Standard Rotalubes

Standard Rotalubes are detailed on page 58.

These applicators have a hard-wearing Nylatron sprocket. Standard Rotalubes can be fed by lubrication kits detailed on pages 60 and 61 or by similar lubrication systems.

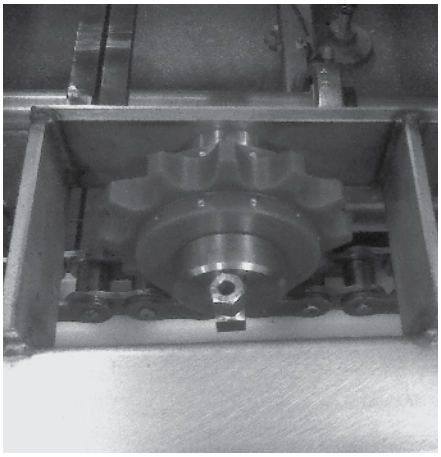

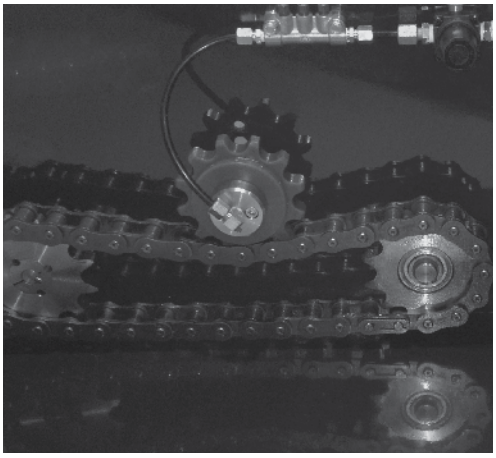

Fig. 32. Standard rotalubes.

Custom Applications

Custom Rotalubes are available for large pitch chain; in some cases, chain with greater than 9-inch pitch.

High-temperature Rotalubes are also available for oven chain.

Custom Rotalubes are specifically designed for each application, together with the appropriate lubrication system to automatically feed the applicators with lubricant.

For further information, or to request a quote on custom applications, please contact your nearest Timken ILS Representative.

You may also contact Timken ILS for the latest custom Rotalube catalog.

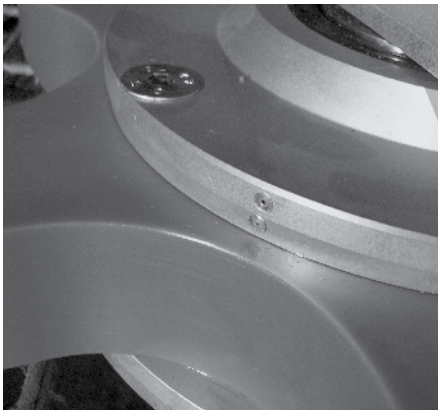

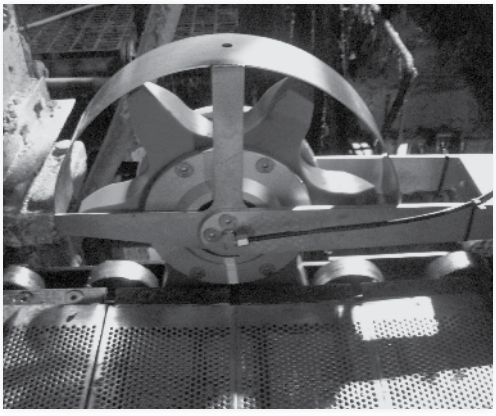

Fig. 33. Custom applications.

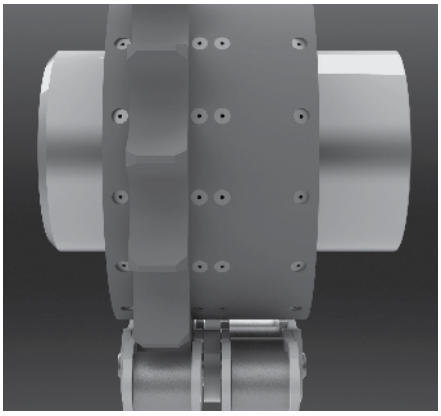

Fig. 34. Duplex and triplex chain.

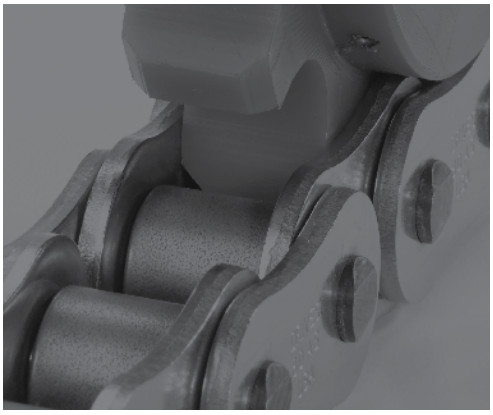

Fig. 35. Vertical mounted applicators.

Contact Rotalube to learn more at 1-888-488-5823 or http://www.interlubesystems.co.uk/contact.php.

TROUBLESHOOTING GUIDE

TABLE 77. TROUBLESHOOTING GUIDE FOR CHAIN

Problem	Possible Causes	What to Do
Excessive noise	• Misalignment of sprockets • Loose casings or bearings • Too little or too much slack • Chain and/or sprocket wear • Inadequate lubrication or no lubrication • Chain pitch size too large	• Realign sprockets and shafts • Tighten set-bolts • Adjust centers or idler take-up • Replace chain and/or sprocket • Lubricate properly • Check chain drive selection
Chain vibration	• Resonance to the vibration cycle of machine to be installed • High load fluctuation	• Change vibration cycle of chain or machine • Use torque converter or fluid coupling
Wear on inside of link plate and one side of sprocket teeth.	• Misalignment	• Realign sprockets and shafts
Chain climbs sprockets	• Excessive chain wear • Excessive chain slack • Heavy overload	• Replace chain • Adjust centers or idler take-up • Reduce load or install stronger chain
Broken pins, bushings or rollers	• Chain speed is too high for pitch and sprocket size • Heavy shock or suddenly applied loads • Material build-up in sprocket tooth pockets • Inadequate lubrication • Chain or sprocket corrosion	• Use shorter pitch chain or install larger diameter sprockets • Reduce shock load or install stronger chain • Remove material build-up or install side-gashed sprockets (mud relief) • Lubricate properly • Install anti-corrosive chain or sprockets
Chain clings to sprocket	• Center distance too long or high load fluctuation • Excessive chain slack • Excessive chain wear	• Adjust the center distance or install idler take-up • Replace chain
Chain gets stiff	• Misalignment • Inadequate lubrication • Corrosion • Excessive load • Material build-up in chain joint • Peening of link plate edges	• Realign sprockets and shafts • Lubricate properly • Replace with anti-corrosive chain • Reduce load or replace with chain or suitable strength • Shield drive from foreign matter • Check for chain interference
Breakage of link plate	• Subjected to shock load • Vibration • Moment of load inertia is too large	• Reduce shock (e.g., install a shock absorber) • Install a device to absorb vibration (e.g., tensioner idler wheel) • Chain section should be checked (increase number of strands or select next larger size chain

CHAIN TOOLS

EZ BREAKER®

CUT YOUR CHAIN BREAKING JOBS DOWN TO SIZE

EZ BREAKER® is a compact, easy-to-use tool for cutting roller chain. This simple, rugged piece of equipment can stand up to the abuses of the shop, farm or industrial environment.

EZ BREAKER will cut ANSI roller chain sizes 35 through 100H, 40-2 through 80-2, 2040 through 2060H, and 550 through 557 with a simple pull of the handle. No more grinding off pin heads. No more hammers and punches.

EZ BREAKER uses powerful cam action to push both chain pins through the link plates with an easy pull of the handle. Breaking different chain sizes is easy.

Precision die sets for each chain size are easily interchangeable. Changing from one die set to another can be accomplished in a few seconds. The time-consuming, tedious job of breaking chain is now accomplished with a single pull of the handle. EZ BREAKER links price and value.

EZ BREAKER has interchangeable die sets that make it easy to switch from one size chain to another.

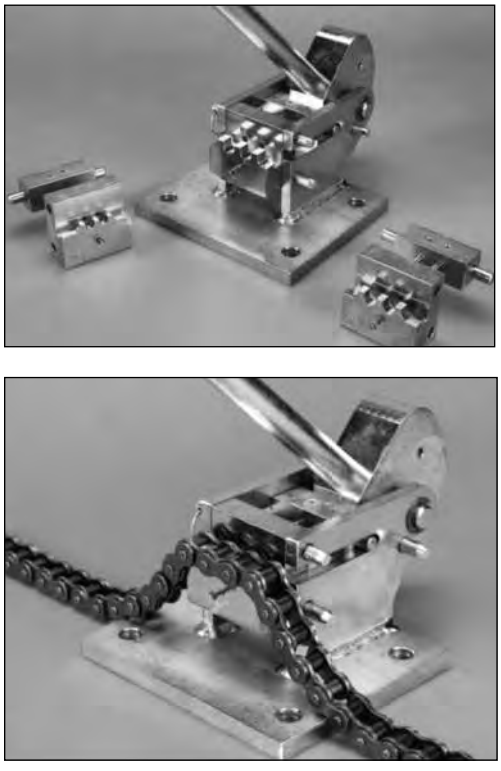

Fig. 36. EZ BREAKER®.

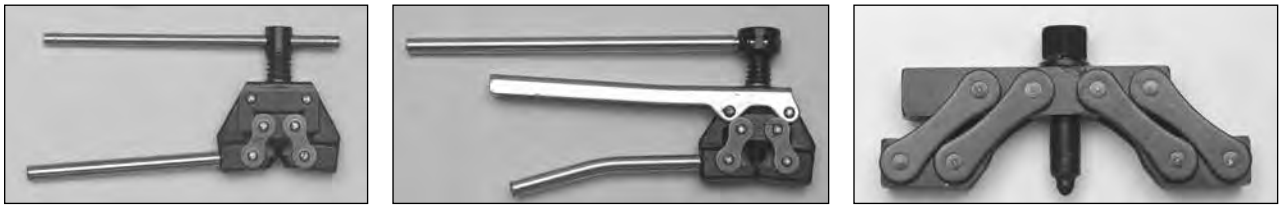

Fig. 37. Chain breakers.

TABLE 78. CHAIN BREAKERS

Part No.	1254	40952	40953
Chain No.	35 – 50	60 – 100	120 – 160

TABLE 79. CHAIN PULLERS

Part No.	36887
Chain No.	40 – 60

Replacement tips and screw assemblies available.



Fig. 38. Chain puller.

EZ CHAIN WEAR GAUGE®

Accurately checks up to nine sizes of American Standard roller chain and up to seven sizes of British Standard roller chain. Quick and easy to use, the go or no-go gauge system gives immediate feedback. Gauge will fit into limited spaces and quickly lets the user know if the chain is worn out.

- Precision-ground, pre-hardened tool steel.
- Convenient grip handle with pre-drilled holes for hanging, to keep you organized.
- Available in three chain gauge sizes:
  - #35 chain – #100 chain = Part #60637.
  - #06B chain – #24B chain = Part #61904.
    (Actual gauge dimensions:
    8.75 in. L x 0.625 in. W x 0.188 in. H)
  - #80 chain – #240 chain = Part #60638.
    (Actual gauge dimensions:
    18 in. L x 1.5 in. W x 0.250 in. H)
- Gauges are designed for 3 percent elongation.
  - Sprockets for roller chain are designed to accept up to 3 percent elongation.



Fig. 39. EZ CHAIN WEAR GAUGE®.

- Single chain size gauges are available upon request for applications which limit elongation other than chain and sprocket interaction.

EZ CHAIN RACK®

Using the EZ CHAIN RACK® is simple. Learn how, in three easy steps, you can make it easy to store and cut our brand of precision roller chain. The EZ CHAIN RACK is versatile, allowing four positions to hold 50-foot reels of chain.

- High-quality welded construction.
- Stand-alone base.
- 31 in. x 31 in. x 51 in. (rough dimensions).
- Individually clutched to prevent chain from uncoiling.
- Four stations.
- Will hold two 50-foot reels of #40 or #50 chain per station.
- OR holds one 50-foot reel of #60, #60H or #80 chain per station.
- Allows easy switch from size to size.
- Rotates in both directions.

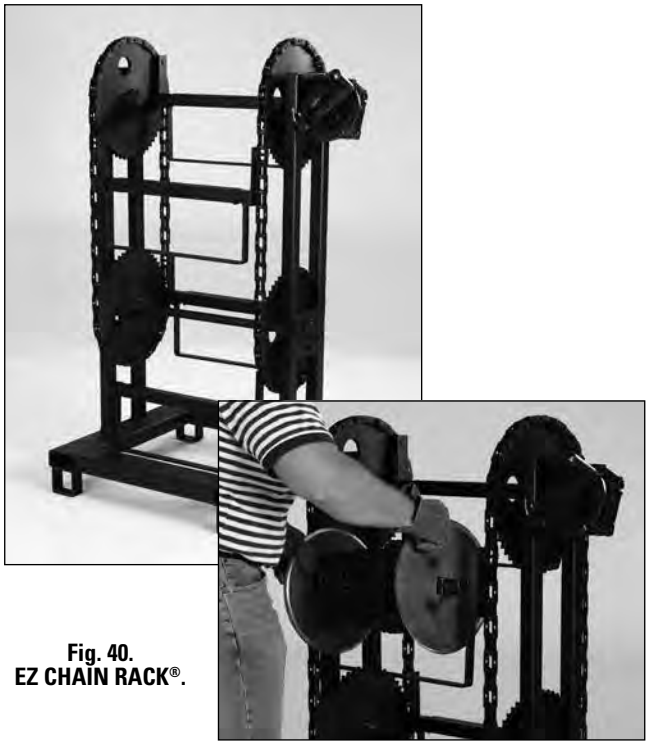

Fig. 40. EZ CHAIN RACK®.

⚠ WARNING

Failure to observe the following warnings could create a risk of death or serious injury.

Follow your lock-out tag-out and power off procedures before lubricating or servicing a chain system.

U.S. Patent Number D598, 307 and 7,654,149, D596,512 and D665492.

ENGINEERING CONVERSIONS

BUSHELS – bu
- x 1.2445 = Cubic feet ($ft.^3$)

CENTIMETERS – cm
- x 0.3937 = Inches (in.)

CENTIMETERS PER SECOND – cm/s
- x 1.9685 = Feet per minute (ft./min.)
- x 0.03291 = Feet per second (ft./s)
- x 0.03600 = Kilometers per hour (km/h)
- x 0.6000 = Meters per minute (m/min.)
- x 0.02237 = Miles per hour (mph)

CUBIC CENTIMETERS – cm^3
- x 3.5315×10^{-5} = Cubic feet ($ft.^3$)
- x 6.1024×10^{-2} = Cubic inches ($in.^3$)
- x 1.308×10^{-6} = Cubic yards ($yd.^3$)
- x 2.642×10^{-4} = U.S. gallons (U.S. gal.)
- x 1.000×10^{-3} = Liters (l)

CUBIC FEET – ft^3
- x 0.02832 = Cubic meters (m^3)
- x 2.832 x 104 = Cubic centimeters (cm^3)
- x 1728 = Cubic inches ($in.^3$)
- x 0.03704 = Cubic yards ($yd.^3$)
- x 7.481 = U.S. gallons (U.S. gal.)
- x 6.229 = Imperial gallons (imp gal)
- x 28.32 = Liters (l)

CUBIC INCHES – $in.^3$
- x 1.6387×10^{-5} = Cubic meters (m^3)
- x 16.387 = Cubic centimeters (cm^3)
- x 0.016387 = Liters (l)
- x 5.787×10^{-4} = Cubic feet (ft.3)
- x 2.143×10^{-5} = Cubic yards ($yd.^3$)
- x 4.329×10^{-3} = U.S. gallons (U.S. gal.)
- x 3.605×10^{-3} = Imperial gallons (imp gal)

CUBIC METERS – m^3
- x 1000 = Liters (l)
- x 35.315 = Cubic feet ($ft.^3$)
- x 61.024×10^3 = Cubic inches ($in.^3$)
- x 1.3080 = Cubic yards ($yd.^3$)
- x 264.2 = U.S. gallons (U.S. gal.)

CUBIC YARDS – yd^3
- x 0.7646 = Cubic meters (m^3)
- x 764.6 = Liters (l)
- x 7.646×10^5 = Cubic centimeters (cm^3)
- x 27 = Cubic feet ($ft.^3$)
- x 46.656 = Cubic inches ($in.^3$)
- x 201.97 = U.S. gallons (U.S. gal.)

DEGREES, ANGULAR (°)
- x 0.017453 = Radians (rad)
- x 60 = Minutes (')
- x 3600 = Seconds (")
- x 1.111 = Grade (gon)

DEGREES PER SECOND, ANGULAR (°/s)
- x 0.017453 = Radians per second (rad/s)
- x 0.16667 = Revolutions per minute (r/min.)
- x 2.7778×10^{-3} = Revolutions per second (r/s)

FEET – ft
- x 0.3048 = Meters (m)
- x 30.480 = Centimeters (cm)
- x 12 = Inches (in.)
- x 0.3333 = Yards (yd.)

FEET PER MINUTE – ft./min.
- x 0.5080 = Centimeters per second (cm/sec.)
- x 0.01829 = Kilometers per hour (km/h)
- x 0.3048 = Meters per minute (m/min.)
- x 0.016667 = Feet per second (ft/sec.)
- x 0.01136 = Miles per hour (mph)

FOOT-POUNDS-FORCE – ft.-lbs.
- x 1.356 = Joules (J)
- x 1.285 x 10-3 = British thermal units (Btu)
- x 3.239 x 10-4 = Kilocalories (kcal)
- x 0.13825 = Kilogram-force-meters (kgf.m)
- x 5.050 x 10-7 = Horsepower-hours (hp.h)
- x 3.766 x 10-7 = Kilowatt-hours (kW.h)

GALLONS, U.S. – U.S. gal.
- x 3.785.4 = Cubic centimeters (cm^3)
- x 3.7854 = Liters (l)
- x 3.7854×10^{-3} = Cubic meters (m^3)
- x 231 = Cubic inches ($in.^3$)
- x 0.13368 = Cubic feet ($ft.^3$)
- x 4.951×10^{-3} = Cubic yards ($yd.^3$)

GRAMS – g
- x 15.432 = Grains (gr)
- x 0.035274 = Ounces (oz.) av.
- x 0.032151 = Ounces (oz.) troy
- x 2.2046×10^{-3} = Pounds (lbs.)

GRAMS-FORCE – gf
- x 9.807×10^{-3} = Newtons (N)

HORSEPOWER – hp
- x 745.7 = Watts (W)
- x 0.7457 = Kilowatts (kW)
- x 1.0139 = Horsepower (metric)

INCHES – in.
- x 2.540 = Centimeters (cm)
- x 25.4 = Millimeters (mm)

KILOGRAMS – kg
- x 2.2046 = Pounds (lbs.)
- x 1.102 x 10-3 = Tons (ton) short

KILOGRAMS-FORCE – kgf
- x 9.807 = Newtons (N)
- x 2.205 = Pounds-force (lbf.)

KILOWATTS – kW
- x 1.3410 = Horsepower (hp)

LITERS – l
- x 1000 = Cubic centimeters (cm^3)
- x 0.035315 = Cubic feet ($ft.^3$)
- x 61.024 = Cubic inches ($in.^3$)
- x 1.308 x 10^{-3} = Cubic yards ($yd.^3$)
- x 0.2642 = U.S. gallons (U.S. gal.)

METERS – m
- x 3.281 = Feet (ft.)
- x 39.37 = Inches (in.)
- x 1.0936 = Yards (yd.)

METERS PER MINUTE – µm m/min.
- x 1.6667 = Centimeters per second (cm/s)
- x 3.281 = Feet per minute (ft/min)
- x 0.05468 = Feet per second (ft/s)
- x 0.03728 = Miles per hour (mph)

MILES – mi.
- x 1.6093 x 103 = Meters (m)
- x 1.6093 = Kilometers (km)
- x 5280 = Feet (ft.)
- x 1760 = Yards (yd.)

MILES PER HOUR – mph
- x 44.70 = Centimeters per second (cm/s)
- x 1.6093 = Kilometers per hour (km/h)
- x 26.82 = Meters per minute (m/min.)
- x 88 = Feet per minute (ft./min.)
- x 1.4667 = Feet per second (ft./sec.)

MILES PER MINUTE – mi/min.
- x 1.6093 = Kilometers per minute (km/min)
- x 2682 = Centimeters per second (cm/sec.)
- x 88 = Feet per second (ft./sec.)
- x 60 = Miles per hour (mph)

MINUTES, ANGULAR – (')
- x 2.909 x 10-4 = Radians (rad)

NEWTONS – N
- x 0.10197 = Kilograms-force (kgf)
- x 0.2248 = Pounds-force (lbf.)

POUNDS-FORCE – lbf av.
- x 4.448 = Newton (N)
- x 0.4536 = Kilograms.force (kgf)

POUNDS – lbs. av.
- x 453.6 = Grams (g)

RADIANS – rad
- x 57.30 = Degrees (°) angular

TONS-MASS – tonm long
- x 1016 = Kilograms (kg)
- x 2240 = Pounds (lbs.) avg.
- x 1.1200 = Tons (ton) short

TONS – ton short
- x 907.2 = Kilograms (kg)
- x 0.9072 = Metric tons (t)
- x 2000 = Pounds (lbs.) avg.
- x 0.8929 = Tons (ton) long

GLOSSARY

A

Angle of Flex: The total angle of chain joint articulation as a chain enters or leaves a sprocket or wheel. The angle is equal to 360 degrees divided by the number of teeth in the sprocket.

ANSI/ASME: The abbreviation for "American National Standards Institute"and "American Society of Mechanical Engineers" – the organizations that sets the standards by which chains should be manufactured.

API: American Petroleum Institute and represents all aspects of the US petroleum and natural gas industry.



API 7F: American Petroleum Institute chain standard.

Articulation (v, "Articulate"): The action of a chain joint flexing from straight, to an angle and back to straight as the joint enters and leaves the sprocket or other path, causing it to flex.

B

Backlash: Movement (if any) of the chain along the pitch line of the sprocket when the direction of chain travel is reversed.

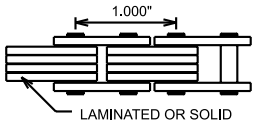

Block Chain: An alternative name used by some manufacturers for bar-link chain or for certain styles of leaf chain.

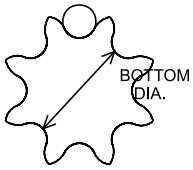

Bottom Diameter: The diameter of a circle measured between one tooth gap and the opposite gap for a sprocket with even an number of teeth.

Bushing: Internal component in a roller chain that the pin articulates around and the roller rotates on.

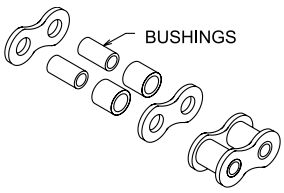

C



Cable Chain: See Leaf Chain.

Caliper Diameter: The distance measured between one tooth gap and the nearest opposite gap for a sprocket with an odd number of teeth.

Caterpillar Drive Chain: Chain with pushers that is used to drive drop forged chain.

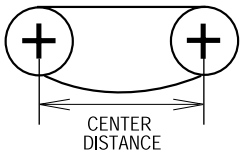

Center Distance: The distance between the centers of the shafts of a chain drive.

Chain Casing: An oil-retaining safety enclosure around a chain drive.

Chain Guard: An open guard of sheet metal, expanded metal or similar construction around a chain drive.

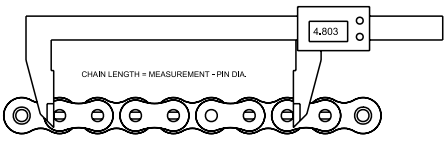

Chain Length: The actual chain length between the joint centers at each end of a taut chain strand. This distance is usually expressed in feet and/or inches or in pitches.

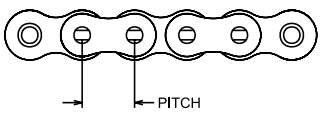

Chain Pitch (Nominal): The average distance between the joints (except for staggered pitch chain) of an assembled chain. In some cases, "joint," as defined here, will be a center of flexure not specifically identified with individual parts of the chain.

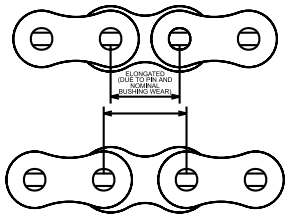

Chain Pitch Elongation or Chain Elongation: Increase in measured length due to wear or excessive load. Normally expressed in percent of length.

Chain Take-up: A mechanical device that takes-up chain slack. This could be an idler sprocket or similar device mounted on an adjustable bracket to adjust the slack in a chain installation.

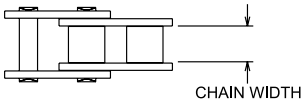

Chain Width: Defined somewhat differently for various chains, but usually the inside width of the chain between the roller link plates.

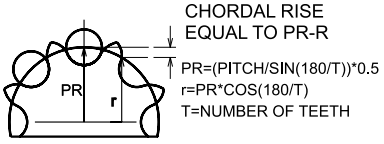

Chordal Effect (Chordal Action): The effect produced by the chain joint centers being forced to follow arcs instead of chords of the sprocket pitch circle.

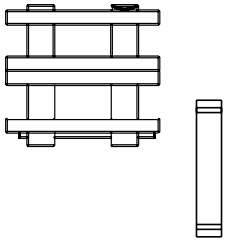

Clevis Connector: A connector used to connect a strand of leaf chain that has an inner-link end to a clevis block that has an inner-link configuration.

Clevis Pin: A pin used to connect a strand of leaf chain that has an inner link end to a clevis block that has an outer-link configuration. The clevis manufacturer should supply this part to help ensure that it will be compatible with the clevis block.

Compressive Stresses: Stresses that act to compress a material and place the material in compression.

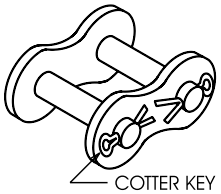

Connecting Link: For a roller chain, a pin link made with one link plate that is easily detachable to facilitate connecting or disconnecting the chain.

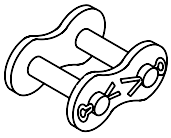

Cotter Key: The retaining pin for a connecting link.

Creep: The flow of plastic deformation of metals held for long periods of time at stresses lower than the normal yield strength. The effect is particularly important if the temperature of stressing is in the vicinity of the re-crystallization temperature of the metal.

Crescent Chain: Standard chain with a crescent-shaped top plate.

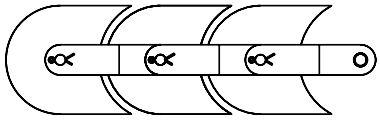

Curve Chain: Chain designed to bend around curves in the horizontal position.

Cycle: Change in load level as a chain completes a cycle around a system. Usually the change is from negligible load to a load peak on a regular basis as the chain undergoes a complete operation cycle.

D

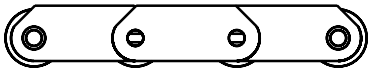

Deep Link Conveyor Chain: Chain design with a carrier roller that protrudes down below the side bar but does not protrude above the side bar.

Design Horsepower: The specified horsepower for a chain drive multiplied by a service factor. It is the value used to select the chain size for the drive.

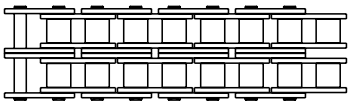

Double-Pitch Roller Chain: A roller chain having double the pitch of a standard roller chain, but otherwise having standard pins and bushings, and standard or over-size rollers.

Duplex Roller Chain: Double strand chain (80-2) (double strand).

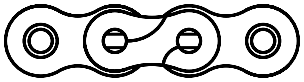

E

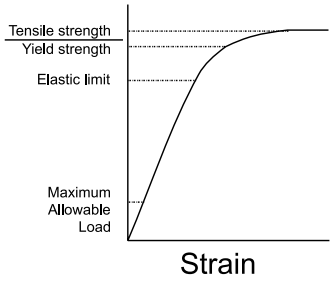

Elastic Limit: The highest load a part (e.g. chain strand) can sustain without incurring a permanent change in length.

Embrittlement: Reduction in ductility of materials due to exposure to certain environments or temperatures.

F

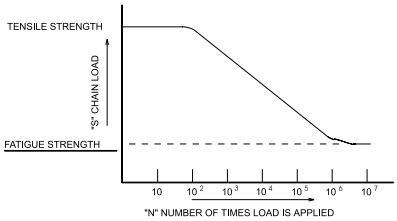

Fatigue Strength: Fatigue is the phenomenon leading to fracture under repeated fluctuating stresses having a maximum value less than the yield strength of material. Fatigue strength is the maximum stress that can be sustained for a specified number of cycles (10E7) without failure.

G

Galling: A condition on the load-bearing surface of a pin or bushing of a chain where excessive friction between high spots results in localized welding with subsequent tearing and a further roughening of the contact surfaces.

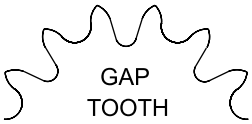

Gap Tooth Sprocket: An even-number tooth sprocket designed with clearance for a through rod or saddle. D-5 or GK1 attachment chains are used on this style sprocket.

H

Hardness: Chain hardness is typically measured in Vickers, Brinell or Rockwell.

Hoist Chain: Chain manufactured strictly for a lifting application.

Hollow Pin Roller Chain: Chain manufactured using a bushing as the pin holding the pin link plates. This chain is generally used in pairs with the two strands running parallel and a through rod tying them together.

J

Joining Link: See Connecting Link.

L

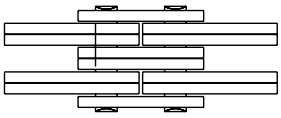

Leaf Chain: A chain consisting of interlacing side plates and riveted pins. This chain is manufactured in accordance with ANSI/ASME standard B29.8. This chain is typically used in lifting and/or tensioning applications.

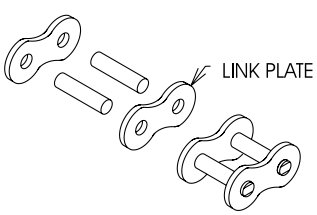

Length Tolerance: The length new chain must be within when measured under a given load.

Link Plate: One of the side plates of either a pin link or a roller link in a roller chain.

Load Classification: A classification of drive loads based on the intensity of shock that is imposed on the drive.

Loading Frequency (Time): Loading frequency is the number of times per unit of time that the chain is exposed to a complete cycle of loading. A complete loading cycle normally occurs when a particular link moves completely around the system and returns to its starting point.

M

Master Link: See Connecting Link.

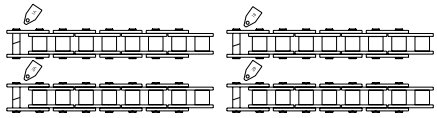

Matching and Tagging: When chains are required for multiple-strand operation, it is important to specify to the manufacturer "matched and tagged chain" together with the number of strands required. The chains will then be measured at the factory and a number tag attached to each strand. Each matching group of strands is tagged with the same number and, whenever possible, will be wired and shipped together. The tags should not be removed until the chain is assembled. The strands must be coupled so that those with the same number are installed side by side. All standard chains must meet standard length tolerances. Matching chain strands ensures that sections of chain with lengths at opposite ends of the tolerance range are not placed together in the conveyor.

Maximum Allowable Load: The maximum tension a chain may safely be subjected to. This value should never be exceeded by actual design load factored by speed, temperature, and dynamic adjustments as applicable.

Measuring Load: The specified standard load under which a chain is to be measured for length (1 percent of tensile strength).

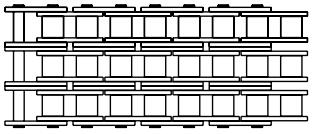

Multiple-Strand Chain: In multiple strand, two or more chains are assembled side by side on common pins that maintain the alignment of the rollers in the several strands. In multiple strands, center plates are located between the strands of roller links. Center plates may be slip-fit or press-fit on the pin as agreed between the chain manufacturer and user. The hyphenated number suffix in the chain number denotes the number of strands: 2 a double strand; 3 a triple strand; 4 a quadruple strand chain; etc.

Number of Roller Chain Strands	Multiple Strand Factor
2	1.7
3	2.5
4	3.3
5	3.9
6	4.6

Multiple Strand Factor: A factor by which the horsepower rating of a single-strand chain is multiplied to obtain the horsepower capacity of a chain with two or more strands.

O

Offset Link: A special offset link, as termed in roller chain descriptions, made for use in straight link chain when an uneven number of links in the total strand is required.

Offset Section: For a roller chain, a factory-assembled section, made up of a roller link and an offset link. Offset sections are used to connect strands of chain having an odd number of pitches.

Overchaining: A drive is overchained when it incorporates a chain of substantially higher rating than that indicated by normal selection procedures to have been necessary.

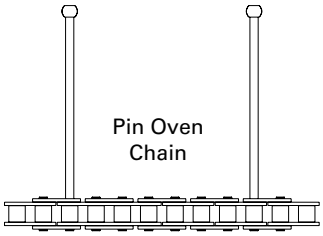

P

Pin Oven Chain: A chain used to convey cans through a drying oven. Typically 60 chain with an extended pin every 7th pitch is used.

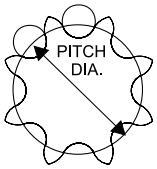

Pitch: See Chain Pitch; Pitch Diameter.

Pitch Diameter: The diameter of the sprocket pitch circle.

Press Fit: Standard designed interference fit between side-plate pitch hole and pin/bushing.

Prestressing (Dynamic): Dynamic prestressing is the process of subjecting chain to a load as it is articulated or wrapped around multiple sprockets. Dynamic prestressing is done to seat the chain components and to reduce initial (break-in) elongation in chain drives.

Prestressing (Static): Static prestressing is the process of subjecting chain to a load at a minimum of 20 percent of the ultimate strength. The chain is pulled in a straight line. Static prestressing is done to seat the chain components and to minimize the variation in strand lengths of attachment chain used in pairs.

Pulsation: Fluctuations of a cyclic nature in load or speed (See Chordal Action).

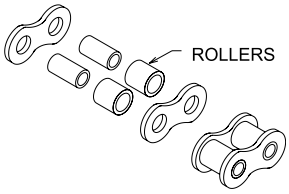

R

Rollers: The component on the chain which engages the sprocket. The roller allows the chain to roll into the sprocket. The roller rotates on the bushing.

Root Diameter: The theoretical bottom diameter of a sprocket, equal to the pitch diameter minus the chain roller or barrel diameter (See Bottom Diameter).

Run-In: The initial period of operation of any mechanism, during which the component parts seat themselves.

S

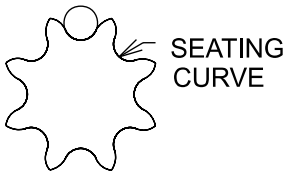

Scoring: Marring or scratching of a pin or bushing caused by metallic debris being picked up in the contact surfaces on one of the parts.

Seating Curve: A specific term for the pocket curve of a roller chain sprocket.

Seizing: Stiffening (or freezing) of a chain joint as a result of roughness and high friction caused by galling. This occurs between the pin and bushing and/or link plates.

Semi-Press Fit (Tap Fit): Minimum interference fit between side plate and pin.

Service Factor: A factor by which the specified horsepower or working load of a chain is multiplied to compensate for operating conditions.

Sheave: A grooved wheel or pulley. Typically used with leaf chain to change its direction.

Shot Peening: Process which is used on the side plates to improve fatigue strength.

Sidebar: Another name for Link Plate.

Side Bow Chain: See Curve Chain.

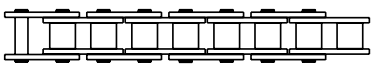

Simplex Roller Chain: Single-strand chain (80) (single strand).

Sinter Bushing: Bushing made from powdered metal and then oil impregnated.

Skip Tooth: A sprocket designed such that the chain engages only every other tooth on the sprocket. Typically used with staggered pitch chain.

Slip-Fit: No interference fit between side plate and pin.

Slip Stick: Slip stick occurs when the motor drives continually and the sprocket rotates, but the chain moves ahead by stopping and starting at intervals. This could be caused by the following:

- Fluctuations in the coefficient of friction between bushing and rollers (i.e. rotating, sticking, rotating, sticking).
- Insufficient chain hardness on conveyor lines.
- Insufficient drive equipment or frame hardness.

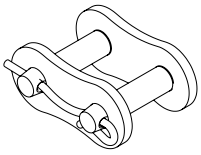

Special Hook Cotter: The retaining pin for cotter-style chain and connecting links.

Staggered Pitch Chain: A chain with alternate links of differing pitches, one usually being considerably greater than the other.

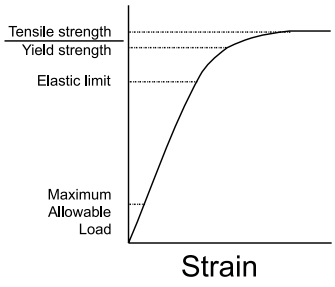

T

Tensile Strength: See Ultimate Strength.

Tension Linkage: A chain application primarily transmitting motion back and forth or up and down at low speeds. A typical example is a forklift reciprocating system.

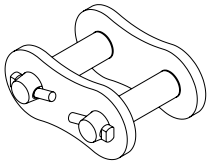

T-Pin/T-Head: The retaining pin for cotter-style chain and connecting links.

Tight Joint or Stiff Joint: Chain joint that does not articulate freely.

Top Roller Chain: Chain which has a roller on top to allow for accumulation of product on top of chain while the chain is moving.

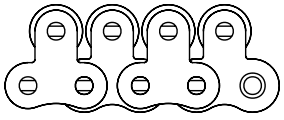

Torque: Torsional force, expressed in inch-pounds in chain calculations, which is the product of chain pull and one-half the sprocket pitch diameter.

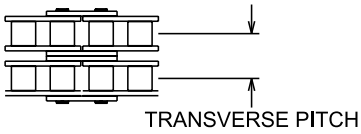

Transverse Clearance: Clearance between roller link plate and pin link plate.

Transverse Pitch: The lateral distance between the centerlines of each strand of multiple strand chain, or between the tooth profiles on a sprocket for a multiple strand chain.

Triplex Roller Chain: Triple strand chain (80-3) (triple strand).

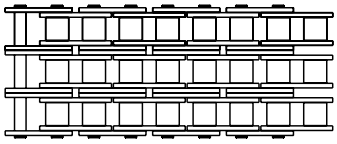

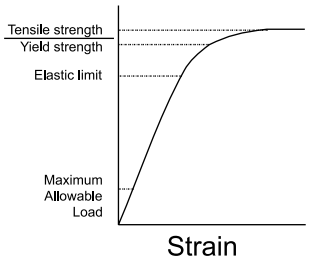

U

Ultimate Strength: The ultimate strength of a chain is the single maximum load that breaks the chain. Typically specified as either average or minimum.

Underchaining: A drive is underchained when it incorporates a chain of substantially lower rating than that indicated to be needed from normal selection procedures.

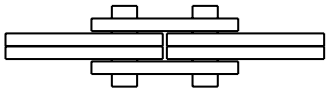

W

Working Load: An allowable suggested chain load used on conveyors, drives with nonstandard chains, or other applications of lower relative speed.

Wrench Chain: Wrench chains are leaf chains with pins extending beyond both sides of the chain. It serves as a tension linkage for holding pipe securely in pipe wrenches. The extended pins permit this chain to support a load not in line with the chain without danger of pulling the link plates off the pins. The pins are used to lock onto a mechanism to accommodate various pipe sizes.

Y

Yield Strength: The elastic limit or yield strength of a chain is the load that causes permanent elongation of the chain.

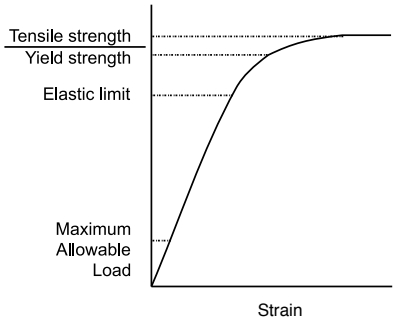



PRECISION ROLLER CHAIN PRODUCT CHARTS

Our precision roller chain products are manufactured to meet or exceed ANSI standards. They excel in tough, high-performance applications. We can even custom manufacture product to your specifications.

Carbon Steel 78
Heavy Series Roller Chain Products 92
Oil Field Roller Chain 94
Extended Life CHP® Series Chain 103
Corrosion Resistant Chains 104
Specialty Chains 109

PRECISION ROLLER CHAIN PRODUCT CHARTS
CARBON STEEL

- Cut-to-length chain available.
- Chain size 80 and larger supplied with cottered connection links.

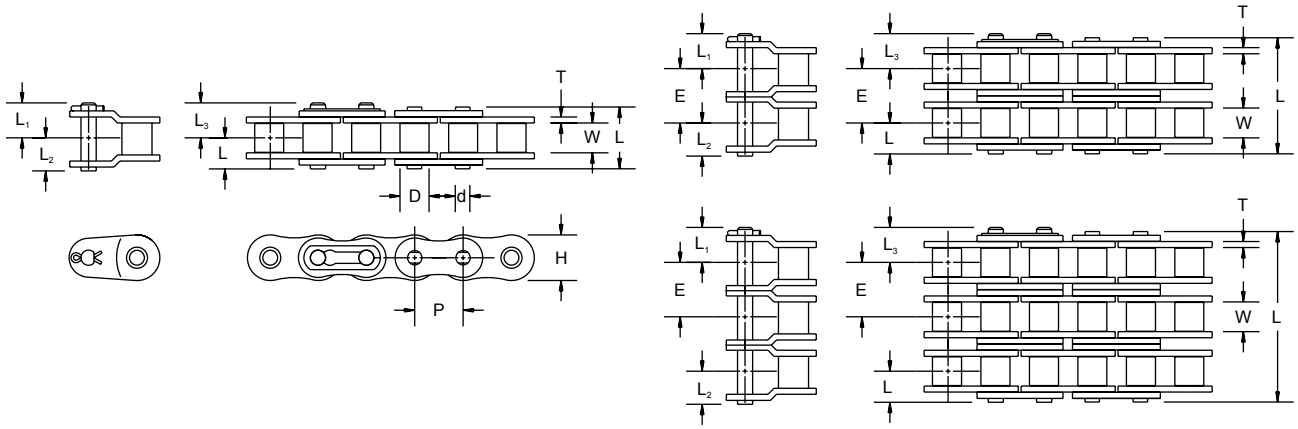

TABLE 80. CARBON STEEL CHAIN DIMENSIONS

Chain No.	Pitch	Width Between L.P.	Roller Dia.	Link Plate		Pin Dia.	Transverse Pitch	Pin					Average Weight
	P	W	D	H	T	d	E	L	L_1	L_2	L_3	L_4	
	in. mm	**in.** mm	**in.** mm	**in.** mm	**in.** mm	**in.** mm	**in.** mm	**in.** mm	**in.** mm	**in.** mm	**in.** mm	**in.** mm	**lbs./ft.** kg/m
35	**0.375** 9.53	**0.189** 4.80	**0.200** 5.08	**0.355** 9.02	**0.049** 1.24	**0.141** 3.58	**0.398** 10.11	**0.480** 12.19	**0.264** 6.71	**0.252** 6.40	**0.264** 6.71	**0.240** 6.10	**0.210** 0.313
41	**0.500** 12.70	**0.252** 6.40	**0.306** 7.77	**0.382** 9.70	**0.049** 1.24	**0.141** 3.58	–	**0.536** 13.61	**0.315** 8.00	**0.268** 6.81	**0.315** 8.00	**0.268** 6.81	**0.273** 0.406
40	**0.500** 12.70	**0.313** 7.95	**0.313** 7.95	**0.472** 11.99	**0.060** 1.52	**0.156** 3.96	**0.567** 14.40	**0.630** 16.00	**0.404** 10.26	**0.317** 8.05	**0.377** 9.58	**0.315** 8.00	**0.420** 0.625
50	**0.625** 15.88	**0.376** 9.55	**0.400** 10.16	**0.590** 14.99	**0.080** 2.03	**0.200** 5.08	**0.713** 18.11	**0.795** 20.19	**0.489** 12.42	**0.399** 10.13	**0.489** 12.42	**0.398** 10.11	**0.713** 1.061
60	**0.750** 19.05	**0.500** 12.70	**0.469** 11.91	**0.705** 17.91	**0.094** 2.39	**0.234** 5.94	**0.898** 22.81	**0.996** 25.30	**0.600** 15.24	**0.498** 12.65	**0.648** 16.46	**0.498** 12.65	**1.067** 1.588
80	**1.000** 25.40	**0.627** 15.93	**0.625** 15.88	**0.943** 23.95	**0.125** 3.18	**0.313** 7.95	**1.155** 29.34	**1.283** 32.59	**0.768** 19.51	**0.638** 16.21	**0.857** 21.77	**0.642** 16.31	**1.868** 2.780
100	**1.250** 31.75	**0.755** 19.18	**0.750** 19.05	**1.180** 29.97	**0.156** 3.96	**0.375** 9.53	**1.411** 35.84	**1.595** 40.51	**0.908** 23.06	**0.785** 19.94	**0.912** 23.16	**0.785** 19.94	**2.801** 4.168
120	**1.500** 38.10	**1.000** 25.40	**0.875** 22.23	**1.425** 36.20	**0.187** 4.75	**0.437** 11.10	**1.289** 32.74	**1.955** 49.66	**1.119** 28.42	**1.071** 27.20	**1.119** 28.42	**0.989** 25.12	**4.135** 6.154
140	**1.750** 44.45	**1.000** 25.40	**1.000** 25.40	**1.663** 42.24	**0.220** 5.59	**0.500** 12.70	**1.924** 48.87	**2.136** 54.25	**1.253** 31.83	**1.150** 29.21	**1.253** 31.83	**1.068** 27.13	**5.136** 7.643
160	**2.000** 50.80	**1.250** 31.75	**1.125** 28.58	**1.899** 48.23	**0.250** 6.35	**0.562** 14.27	**2.305** 58.55	**2.538** 64.47	**1.454** 36.93	**1.370** 34.80	**1.454** 36.93	**1.269** 32.23	**6.603** 9.826
180	**2.250** 57.15	**1.400** 35.56	**1.406** 35.71	**2.132** 54.15	**0.281** 7.14	**0.687** 17.45	**2.592** 65.84	**2.780** 70.61	**1.561** 39.65	**1.390** 35.31	**1.561** 39.65	**1.390** 35.31	**9.100** 13.542
200	**2.500** 63.50	**1.490** 37.85	**1.562** 39.67	**2.312** 58.72	**0.312** 7.92	**0.781** 19.84	**2.817** 71.55	**3.088** 78.44	**1.889** 47.98	**1.544** 39.22	**1.889** 47.98	**1.544** 39.22	**10.900** 16.221
240	**3.000** 76.20	**1.864** 47.35	**1.875** 47.63	**2.812** 71.42	**0.375** 9.53	**0.937** 23.80	**3.458** 87.83	**3.708** 94.18	**2.212** 56.18	**1.854** 47.09	**2.212** 56.18	**1.854** 47.09	**16.400** 24.406

NOTE: Dimensions are subject to change. Contact your Drives representative to obtain certified prints for design and construction.
NOTE: See pages 92 and 93, and table 81 on page 79 and tables 116 and 117 on pages 120-121 for available heavy series and double-pitch roller chain sizes.
NOTE: See pages 80-91 for multi-strand dimensions.

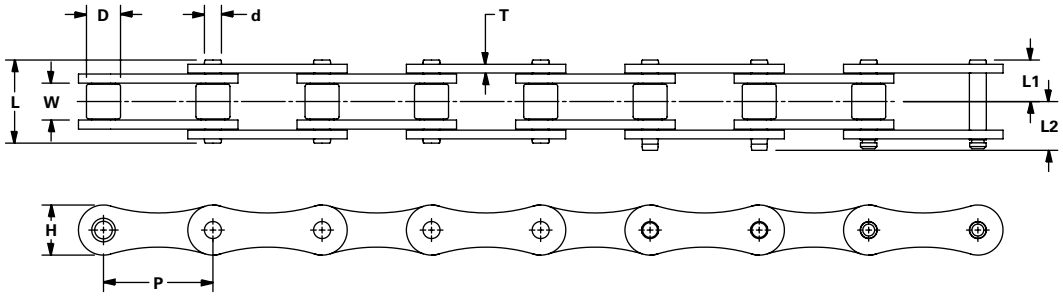

TABLE 81. SMALL ROLLER CARBON STEEL CHAIN DIMENSIONS

Chain No.	Pitch	Width Between L.P.	Roller Dia.	Link Plate		Pin Dia.	Pin			Average Weight
	P	W	D	H	T	d	L	L_1	L_2	
	in. mm	**in.** mm	**in.** mm	**in.** mm	**in.** mm	**in.** mm	**in.** mm	**in.** mm	**in.** mm	**lbs./ft.** kg/m
A2040	**1.000** 25.40	**0.312** 7.92	**0.312** 7.92	**0.472** 11.99	**0.060** 1.52	**0.156** 3.96	**0.638** 16.21	**0.319** 8.10	**0.382** 9.70	**0.270** 0.402
A2050	**1.250** 31.75	**0.376** 9.55	**0.400** 10.16	**0.590** 14.99	**0.080** 2.03	**0.200** 5.08	**0.795** 20.19	**0.398** 10.11	**0.489** 12.42	**0.450** 0.670
A2060	**1.500** 38.10	**0.500** 12.70	**0.469** 11.91	**0.705** 17.91	**0.094** 2.39	**0.234** 5.94	**0.996** 25.30	**0.498** 12.65	**0.648** 16.46	**0.630** 0.938

35 – 0.375 INCH PITCH

- Cut-to-length chain available.
- Available in riveted style.

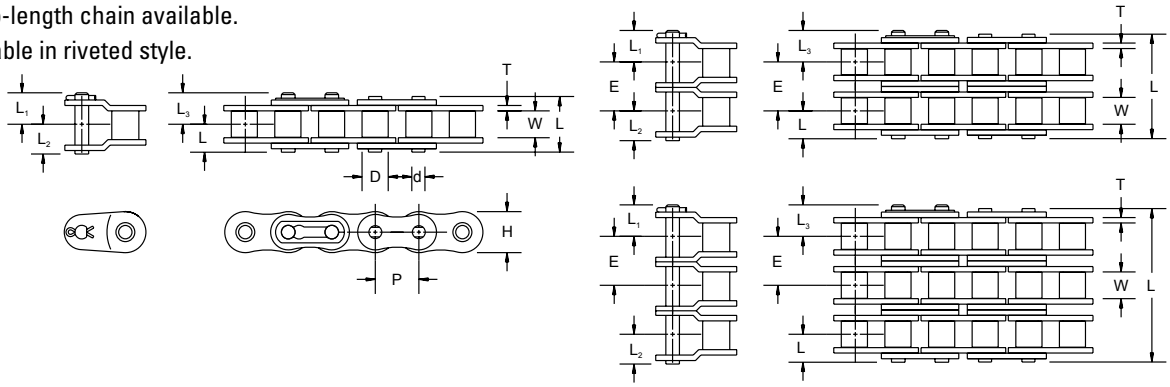

TABLE 82. 35 – 0.375 in. (9.525 mm) PITCH CHAIN DIMENSIONS

Chain No.	Pitch	Min. Roller Link Inside Width	Bushing Dia.	Link Plate		Pin Dia.	Transverse Pitch	Pin					Average Tensile Strength (Through-Hardened Pin)	Average Weight
	P	W	D	H	T	d	E	L	L_1	L_2	L_3	L_4		
	in. mm	**in.** mm	**in.** mm	**in.** mm	**in.** mm	**in.** mm	**in.** mm	**in.** mm	**in.** mm	**in.** mm	**in.** mm	**in.** mm	**lbs.** kN	**lbs./ft.** kg/m
35-1	**0.375** 9.53	**0.189** 4.80	**0.200** 5.08	**0.355** 9.02	**0.049** 1.24	**0.141** 3.58	– –	**0.480** 12.19	**0.264** 6.71	**0.252** 6.40	**0.264** 6.71	**0.240** 6.10	**2,100** 9.34	**0.210** 0.313
35-2	**0.375** 9.53	**0.189** 4.80	**0.200** 5.08	**0.355** 9.02	**0.049** 1.24	**0.141** 3.58	**0.398** 10.11	**0.878** 22.30	**0.264** 6.71	**0.252** 6.40	**0.264** 6.71	**0.240** 6.10	**4,200** 18.68	**0.410** 0.610
35-3	**0.375** 9.53	**0.189** 4.80	**0.200** 5.08	**0.355** 9.02	**0.049** 1.24	**0.141** 3.58	**0.398** 10.11	**1.276** 32.41	**0.264** 6.71	**0.252** 6.40	**0.264** 6.71	**0.240** 6.10	**6,300** 28.02	**0.620** 0.923

NOTE: Dimensions are subject to change. Contact your Drives representative to obtain certified prints for design and construction.

41 – 0.500 INCH PITCH

- Cut-to-length chain available.
- Available in riveted style.

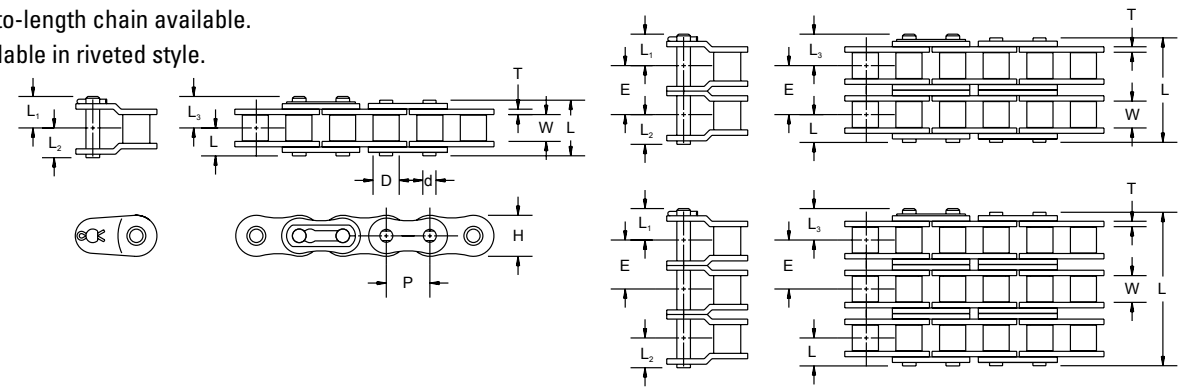

TABLE 83. 41 – 0.500 in. (12.7 mm) PITCH CHAIN DIMENSIONS

Chain No.	Pitch	Min. Roller Link Inside Width	Roller Dia.	Link Plate		Pin Dia.	Pin					Average Tensile Strength (Through-Hardened Pin)	Average Weight
	P	W	D	H	T	d	L	L_1	L_2	L_3	L_4		
	in. mm	**in.** mm	**in.** mm	**in.** mm	**in.** mm	**in.** mm	**in.** mm	**in.** mm	**in.** mm	**in.** mm	**in.** mm	**lbs.** kN	**lbs./ft.** kg/m
41-1	**0.500** 12.70	**0.252** 6.40	**0.306** 7.77	**0.382** 9.70	**0.049** 1.24	**0.141** 3.58	**0.536** 13.61	**0.315** 8.00	**0.268** 6.81	**0.315** 8.00	**0.268** 6.81	**2,400** 10.68	**0.273** 0.406

NOTE: Dimensions are subject to change. Contact your Drives representative to obtain certified prints for design and construction.

40 – 0.500 INCH PITCH

- Cut-to-length chain available.
- Available in riveted style.

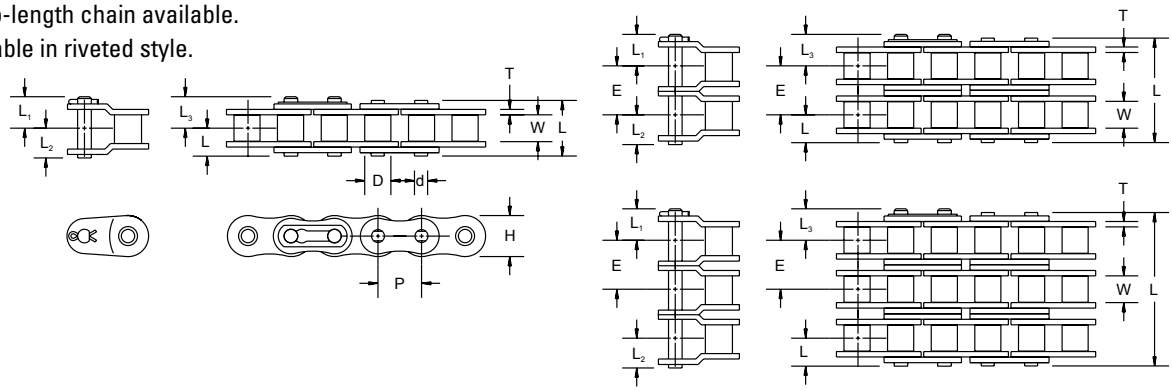

TABLE 84. 40 – 0.500 in. (12.7 mm) PITCH CHAIN DIMENSIONS

Chain No. NP = Nickel Plated (see page 106). CR = Silver Shield® (see page 107). CH = Extended Life CHP® (see page 103).		Pitch	Min. Roller Link Inside Width	Roller Dia.	Link Plate		Pin Dia.	Trans-verse Pitch	Pin					Average Tensile Strength (Case-Hardened Pin)	Average Weight
		P	W	D	H	T	d	E	L	L_1	L_2	L_3	L_4		
		in. mm	**in.** mm	**in.** mm	**in.** mm	**in.** mm	**in.** mm	**in.** mm	**in.** mm	**in.** mm	**in.** mm	**in.** mm	**in.** mm	**lbs.** kN	**lbs./ft.** kg/m
40-1	40NP-1, 40CR-1 40CH-1	**0.500** 12.70	**0.313** 7.95	**0.313** 7.95	**0.472** 11.99	**0.060** 1.52	**0.156** 3.96	**–** –	**0.630** 16.00	**0.404** 10.26	**0.317** 8.05	**0.377** 9.58	**0.315** 8.00	**4,200** 18.68	**0.420** 0.625
40-2	40NP-2, 40CR-2 40CH-2	**0.500** 12.70	**0.313** 7.95	**0.313** 7.95	**0.472** 11.99	**0.060** 1.52	**0.156** 3.96	**0.567** 14.40	**1.195** 30.35	**0.404** 10.26	**0.317** 8.05	**0.377** 9.58	**0.315** 8.00	**8,400** 37.37	**0.810** 1.205
40-3	40NP-3, 40CR-3	**0.500** 12.70	**0.313** 7.95	**0.313** 7.95	**0.472** 11.99	**0.060** 1.52	**0.156** 3.96	**0.567** 14.40	**1.773** 45.03	**0.404** 10.26	**0.317** 8.05	**0.377** 9.58	**0.315** 8.00	**12,600** 56.05	**1.210** 1.801
40-4	40NP-4, 40CR-4	**0.500** 12.70	**0.313** 7.95	**0.313** 7.95	**0.472** 11.99	**0.060** 1.52	**0.156** 3.96	**0.567** 14.40	**2.331** 59.21	**0.404** 10.26	**0.317** 8.05	**0.377** 9.58	**0.315** 8.00	**16,800** 74.73	**1.610** 2.396

NOTE: Dimensions are subject to change. Contact your Drives representative to obtain certified prints for design and construction.

50 – 0.625 INCH PITCH

- Cut-to-length chain available.
- Available in riveted style.

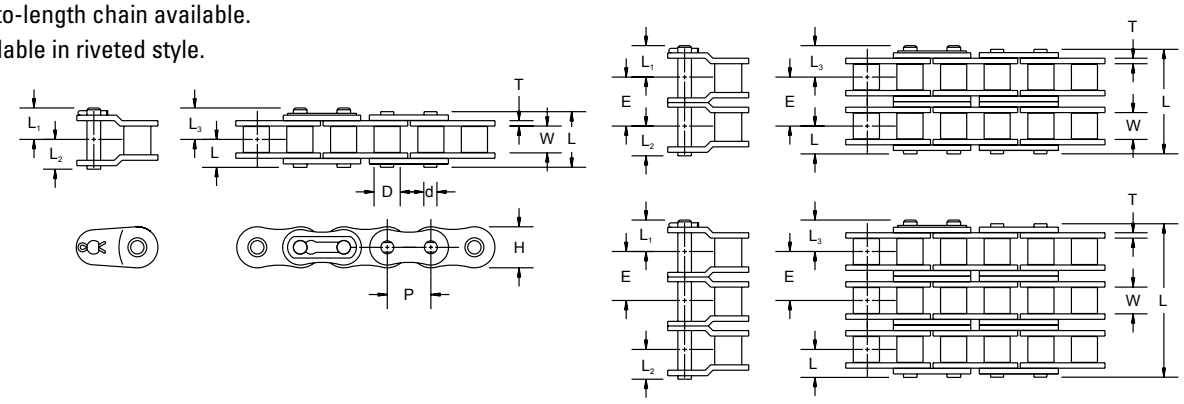

TABLE 85. 50 – 0.625 in. (15.31 mm) PITCH CHAIN DIMENSIONS

Chain No. NP = Nickel Plated (see page 106). CR = Silver Shield® (see page 107). CH = Extended Life CHP® (see page 103).		Pitch	Min. Roller Link Inside Width	Roller Dia.	Link Plate		Pin Dia.	Trans-verse Pitch	Pin					Average Tensile Strength (Case-Hardened Pin)	Average Weight
		P	W	D	H	T	d	E	L	L_1	L_2	L_3	L_4		
		in. mm	**in.** mm	**in.** mm	**in.** mm	**in.** mm	**in.** mm	**in.** mm	**in.** mm	**in.** mm	**in.** mm	**in.** mm	**in.** mm	**lbs.** kN	**lbs./ft.** kg/m
50-1	50NP-1, 50CR-1, 50CH-1	**0.625** 15.31	**0.376** 9.21	**0.400** 9.80	**0.590** 14.46	**0.080** 1.96	**0.200** 4.90	– –	**0.795** 19.48	**0.489** 11.98	**0.399** 9.78	**0.489** 11.98	**0.398** 9.75	**6,600** 29.36	**0.713** 1.061
50-2	50NP-2, 50CR-2, 50CH-2	**0.625** 15.31	**0.376** 9.21	**0.400** 9.80	**0.590** 14.46	**0.080** 1.96	**0.200** 4.90	**0.713** 17.47	**1.511** 37.02	**0.489** 11.98	**0.399** 9.78	**0.489** 11.98	**0.398** 9.75	**13,200** 58.72	**1.406** 2.092
50-3	50NP-3, 50CR-3	**0.625** 15.31	**0.376** 9.21	**0.400** 9.80	**0.590** 14.46	**0.080** 1.96	**0.200** 4.90	**0.713** 17.47	**2.230** 54.64	**0.489** 11.98	**0.399** 9.78	**0.489** 11.98	**0.398** 9.75	**19,800** 88.07	**2.099** 3.124
50-4	50NP-4, 50CR-4	**0.625** 15.31	**0.376** 9.21	**0.400** 9.80	**0.590** 14.46	**0.080** 1.96	**0.200** 4.90	**0.713** 17.47	**2.943** 72.10	**0.489** 11.98	**0.399** 9.78	**0.489** 11.98	**0.398** 9.75	**26,400** 117.43	**2.790** 4.152
50-5	50NP-5, 50CR-5	**0.625** 15.31	**0.376** 9.21	**0.400** 9.80	**0.590** 14.46	**0.080** 1.96	**0.200** 4.90	**0.713** 17.47	**3.656** 89.57	**0.489** 11.98	**0.399** 9.78	**0.489** 11.98	**0.398** 9.75	**33,000** 146.79	**3.830** 5.700

NOTE: Dimensions are subject to change. Contact your Drives representative to obtain certified prints for design and construction.

60 – 0.750 INCH PITCH

- Cut-to-length chain available.

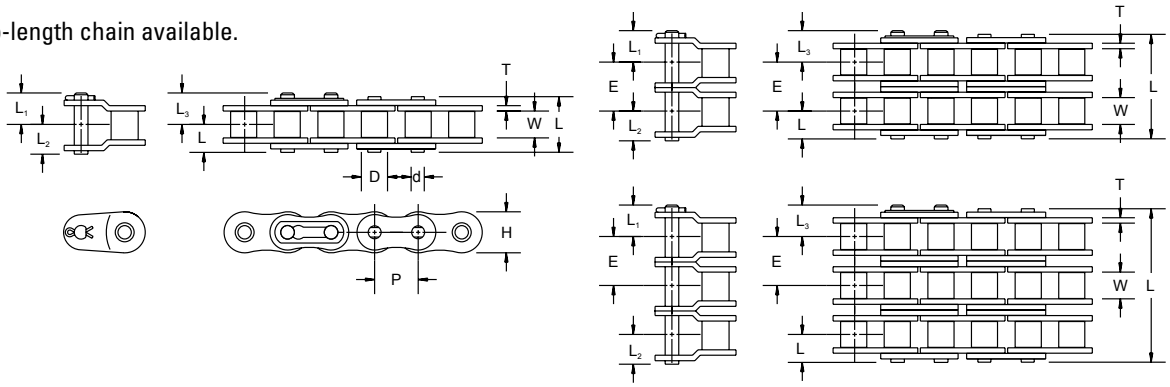

TABLE 86. 60 – 0.750 in. (19.05 mm) PITCH CHAIN DIMENSIONS

Chain No. NP = Nickel Plated (see page 106). CR = Silver Shield® (see page 107). CH = Extended Life CHP® (see page 103).		Pitch	Min. Roller Link Inside Width	Roller Dia.	Link Plate		Pin Dia.	Trans-verse Pitch	Pin					Average Tensile Strength (Case-Hardened Pin)	Average Weight
		P	W	D	H	T	d	E	L	L_1	L_2	L_3	L_4		
		in. mm	**in.** mm	**in.** mm	**in.** mm	**in.** mm	**in.** mm	**in.** mm	**in.** mm	**in.** mm	**in.** mm	**in.** mm	**in.** mm	**lbs.** kN	**lbs./ft.** kg/m
60-1	60NP-1, 60CR-1 60CH-1	**0.750** 19.05	**0.500** 12.70	**0.469** 11.91	**0.705** 17.91	**0.094** 2.39	**0.234** 5.94	**–** –	**0.996** 25.30	**0.600** 15.24	**0.498** 12.65	**0.648** 16.46	**0.498** 12.65	**8,500** 37.81	**1.067** 1.588
60-2	60NP-2, 60CR-2 60CH-2	**0.750** 19.05	**0.500** 12.70	**0.469** 11.91	**0.705** 17.91	**0.094** 2.39	**0.234** 5.94	**0.898** 22.81	**1.896** 48.16	**0.600** 15.24	**0.498** 12.65	**0.648** 16.46	**0.498** 12.65	**17,000** 75.62	**2.068** 3.078
60-3	60NP-3, 60CR-3	**0.750** 19.05	**0.500** 12.70	**0.469** 11.91	**0.705** 17.91	**0.094** 2.39	**0.234** 5.94	**0.898** 22.81	**2.794** 70.97	**0.600** 15.24	**0.498** 12.65	**0.648** 16.46	**0.498** 12.65	**25,500** 113.43	**3.069** 4.567
60-4	60NP-4, 60CR-4	**0.750** 19.05	**0.500** 12.70	**0.469** 11.91	**0.705** 17.91	**0.094** 2.39	**0.234** 5.94	**0.898** 22.81	**3.690** 93.73	**0.600** 15.24	**0.498** 12.65	**0.648** 16.46	**0.498** 12.65	**34,000** 151.24	**4.070** 6.057
60-5	60NP-5, 60CR-5	**0.750** 19.05	**0.500** 12.70	**0.469** 11.91	**0.705** 17.91	**0.094** 2.39	**0.234** 5.94	**0.898** 22.81	**4.588** 116.54	**0.600** 15.24	**0.498** 12.65	**0.648** 16.46	**0.498** 12.65	**42,500** 189.05	**5.071** 7.545
60-6	60NP-6, 60CR-6	**0.750** 19.05	**0.500** 12.70	**0.469** 11.91	**0.705** 17.91	**0.094** 2.39	**0.234** 5.94	**0.898** 22.81	**5.486** 139.34	**0.600** 15.24	**0.498** 12.65	**0.648** 16.46	**0.498** 12.65	**51,000** 226.86	**6.072** 9.036

NOTE: Dimensions are subject to change. Contact your Drives representative to obtain certified prints for design and construction.

80 – 1.000 INCH PITCH

- Cut-to-length chain available.

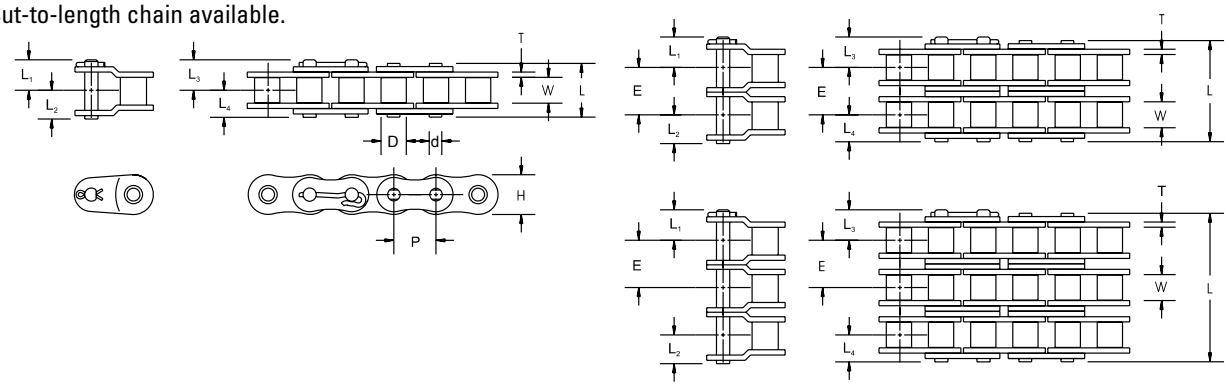

TABLE 87. 80 – 1.000 in. (25.4 mm) PITCH CHAIN DIMENSIONS

Chain No. NP = Nickel Plated (see page 106). CR = Silver Shield® (see page 107). CH = Extended Life CHP® (see page 103). Z = High Strength – Through-Hardened Pin with Ballized plate (see page 93).		Pitch	Min. Roller Link Inside Width	Roller Dia.	Link Plate		Pin Dia.	Trans-verse Pitch	Pin					Average Tensile Strength (Case-Hardened Pin)	Average Tensile Strength (Through-Hardened Pin)	Average Weight
		P	W	D	H	T	d	E	L	L_1	L_2	L_3	L_4			
		in. mm	**in.** mm	**in.** mm	**in.** mm	**in.** mm	**in.** mm	**in.** mm	**in.** mm	**in.** mm	**in.** mm	**in.** mm	**in.** mm	**lbs.** kN	**lbs.** kN	**lbs./ft.** kg/m
80-1	80NP-1, 80CR-1, 80CH-1, 80Z-1	**1.000** 25.40	**0.627** 15.93	**0.625** 15.88	**0.943** 23.95	**0.125** 3.18	**0.313** 7.95	**–** –	**1.283** 32.59	**0.768** 19.51	**0.638** 16.21	**0.857** 21.77	**0.642** 16.31	**14,500** 64.50	**21,500** 95.64	**1.87** 2.783
80-2	80NP-2, 80CR-2, 80CH-2, 80Z-2	**1.000** 25.40	**0.627** 15.93	**0.625** 15.88	**0.943** 23.95	**0.125** 3.18	**0.313** 7.95	**1.155** 29.34	**2.439** 61.95	**0.768** 19.51	**0.638** 16.21	**0.857** 21.77	**0.642** 16.31	**29,000** 129.00	**43,000** 191.27	**3.74** 5.566
80-3	80NP-3, 80CR-3, 80Z-3	**1.000** 25.40	**0.627** 15.93	**0.625** 15.88	**0.943** 23.95	**0.125** 3.18	**0.313** 7.95	**1.155** 29.34	**3.594** 91.29	**0.768** 19.51	**0.638** 16.21	**0.857** 21.77	**0.642** 16.31	**43,500** 193.50	**64,500** 382.55	**5.60** 8.334
80-4	80NP-4, 80CR-4, 80Z-4	**1.000** 25.40	**0.627** 15.93	**0.625** 15.88	**0.943** 23.95	**0.125** 3.18	**0.313** 7.95	**1.155** 29.34	**4.749** 120.62	**0.768** 19.51	**0.638** 16.21	**0.857** 21.77	**0.642** 16.31	**58,000** 258.00	**86,000** 382.55	**7.44** 11.072
80-5	80NP-5, 80CR-5, 80Z-5	**1.000** 25.40	**0.627** 15.93	**0.625** 15.88	**0.943** 23.95	**0.125** 3.18	**0.313** 7.95	**1.155** 29.34	**5.904** 149.96	**0.768** 19.51	**0.638** 16.21	**0.857** 21.77	**0.642** 16.31	**72,500** 322.50	**107,500** 478.18	**9.03** 13.438
80-6	80NP-6, 80CR-6, 80Z-6	**1.000** 25.40	**0.627** 15.93	**0.625** 15.88	**0.943** 23.95	**0.125** 3.18	**0.313** 7.95	**1.155** 29.34	**7.059** 179.30	**0.768** 19.51	**0.638** 16.21	**0.857** 21.77	**0.642** 16.31	**87,000** 387.00	**129,000** 573.82	**10.82** 16.102
80-8	80NP-8, 80CR-8, 80Z-8	**1.000** 25.40	**0.627** 15.93	**0.625** 15.88	**0.943** 23.95	**0.125** 3.18	**0.313** 7.95	**1.155** 29.34	**9.369** 237.97	**0.768** 19.51	**0.638** 16.21	**0.857** 21.77	**0.642** 16.31	**116,000** 515.99	**172,000** 765.09	**14.43** 21.474

NOTE: Dimensions are subject to change. Contact your Drives representative to obtain certified prints for design and construction.

100 – 1.250 IN. PITCH

- Cut-to-length chain available.

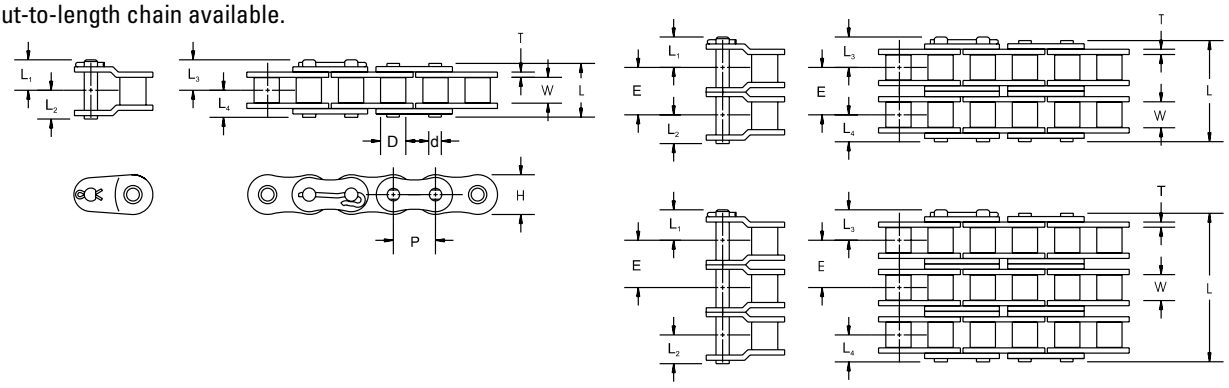

TABLE 88. 100 – 1.250 in. (31.75 mm) PITCH CHAIN DIMENSIONS

Chain No. NP = Nickel Plated (see page 106). CR = Silver Shield® (see page 107). CH = Extended Life CHP® (see page 103). Z = High Strength – Through-Hardened Pin with Ballized plate (see page 93).		Pitch	Min. Roller Link Inside Width	Roller Dia.	Link Plate		Pin Dia.	Trans-verse Pitch	Pin					Average Tensile Strength (Case-Hardened Pin)	Average Tensile Strength (Through-Hardened Pin)	Average Weight
		P	W	D	H	T	d	E	L	L_1	L_2	L_3	L_4			
		in. mm	**in.** mm	**in.** mm	**in.** mm	**in.** mm	**in.** mm	**in.** mm	**in.** mm	**in.** mm	**in.** mm	**in.** mm	**in.** mm	**lbs.** kN	**lbs.** kN	**lbs./ft.** kg/m
100-1	100NP-1, 100CR-1, 100CH-1, 100Z-1	**1.250** 31.75	**0.755** 19.18	**0.750** 19.05	**1.180** 29.97	**0.156** 3.96	**0.375** 9.53	**–** –	**1.595** 40.51	**0.908** 23.06	**0.785** 19.94	**0.912** 23.16	**0.785** 19.94	**24,000** 106.76	**33,000** 146.79	**2.80** 4.167
100-2	100NP-2, 100CR-2, 100CH-2, 100Z-2	**1.250** 31.75	**0.755** 19.18	**0.750** 19.05	**1.180** 29.97	**0.156** 3.96	**0.375** 9.53	**1.411** 35.84	**2.981** 75.72	**0.908** 23.06	**0.785** 19.94	**0.912** 23.16	**0.785** 19.94	**48,000** 213.51	**66,000** 293.58	**5.60** 8.334
100-3	100NP-3, 100CR-3, 100Z-3	**1.250** 31.75	**0.755** 19.18	**0.750** 19.05	**1.180** 29.97	**0.156** 3.96	**0.375** 9.53	**1.411** 35.84	**4.392** 111.56	**0.908** 23.06	**0.785** 19.94	**0.912** 23.16	**0.785** 19.94	**72,000** 320.27	**99,000** 440.37	**8.47** 12.605
100-4	100NP-4, 100CR-4, 100Z-4	**1.250** 31.75	**0.755** 19.18	**0.750** 19.05	**1.180** 29.97	**0.156** 3.96	**0.375** 9.53	**1.411** 35.84	**5.803** 147.40	**0.908** 23.06	**0.785** 19.94	**0.912** 23.16	**0.785** 19.94	**96,000** 427.03	**132,000** 587.17	**11.11** 16.534
100-5	100NP-5, 100CR-5, 100Z-5	**1.250** 31.75	**0.755** 19.18	**0.750** 19.05	**1.180** 29.97	**0.156** 3.96	**0.375** 9.53	**1.411** 35.84	**7.214** 183.24	**0.908** 23.06	**0.785** 19.94	**0.912** 23.16	**0.785** 19.94	**120,000** 533.79	**165,000** 733.96	**13.97** 20.790
100-6	100NP-6, 100CR-6, 100Z-6	**1.250** 31.75	**0.755** 19.18	**0.750** 19.05	**1.180** 29.97	**0.156** 3.96	**0.375** 9.53	**1.411** 35.84	**8.625** 219.08	**0.908** 23.06	**0.785** 19.94	**0.912** 23.16	**0.785** 19.94	**144,000** 640.54	**198,000** 880.75	**16.72** 24.882
100-8	100NP-8, 100CR-8, 100Z-8	**1.250** 31.75	**0.755** 19.18	**0.750** 19.05	**1.180** 29.97	**0.156** 3.96	**0.375** 9.53	**1.411** 35.84	**11.447** 290.75	**0.908** 23.06	**0.785** 19.94	**0.912** 23.16	**0.785** 19.94	**192,000** 854.06	**264,000** 1174.33	**22.29** 33.171

NOTE: Dimensions are subject to change. Contact your Drives representative to obtain certified prints for design and construction.

120 – 1.500 IN. PITCH

- Cut-to-length chain available.

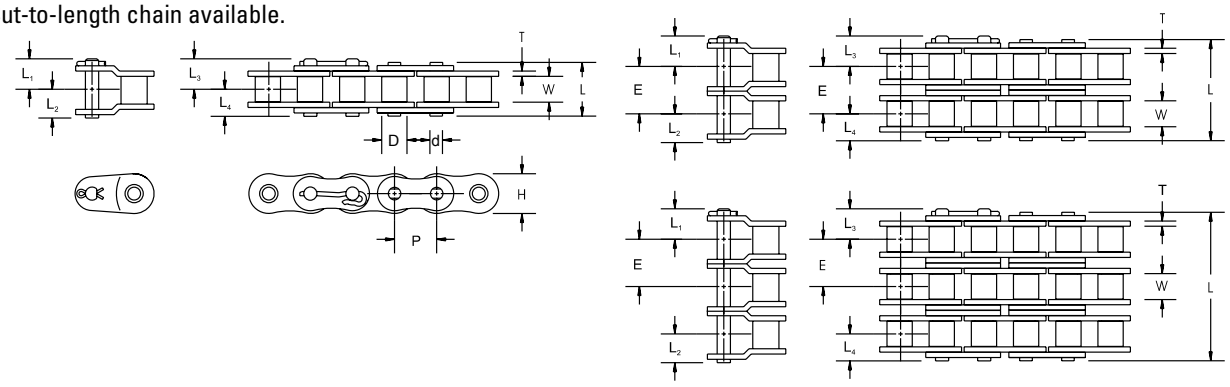

TABLE 89. 120 – 1.500 in. (38.1 mm) PITCH CHAIN DIMENSIONS

Chain No.		Pitch	Min. Roller Link Inside Width	Roller Dia.	Link Plate		Pin Dia.	Trans-verse Pitch	Pin					Average Tensile Strength (Case-Hardened Pin)	Average Tensile Strength (Through-Hardened Pin)	Average Weight
NP = Nickel Plated (see page 106). CR = Silver Shield® (see page 107). CH = Extended Life CHP® (see page 103). Z = High Strength – Through-Hardened Pin with Ballized plate (see page 93).		P	W	D	H	T	d	E	L	L_1	L_2	L_3	L_4			
		in. mm	**in.** mm	**in.** mm	**in.** mm	**in.** mm	**in.** mm	**in.** mm	**in.** mm	**in.** mm	**in.** mm	**in.** mm	**in.** mm	**lbs.** kN	**lbs.** kN	**lbs./ft.** kg/m
120-1	120NP-1, 120CR-1, 120CH-1, 120Z-1	**1.500** 38.10	**1.000** 25.40	**0.875** 22.23	**1.425** 36.20	**0.187** 4.75	**0.437** 11.10	**–** –	**1.955** 49.66	**1.119** 28.42	**1.071** 27.20	**1.119** 28.42	**0.989** 25.12	**34,000** 151.24	**45,100** 200.61	**4.14** 6.161
120-2	120NP-2, 120CR-2, 120CH-2, 120Z-2	**1.500** 38.10	**1.000** 25.40	**0.875** 22.23	**1.425** 36.20	**0.187** 4.75	**0.437** 11.10	**1.789** 45.44	**3.767** 95.68	**1.119** 28.42	**1.071** 27.20	**1.119** 28.42	**0.989** 25.12	**68,000** 302.48	**90,200** 401.23	**8.27** 12.307
120-3	120NP-3, 120CR-3, 120Z-3	**1.500** 38.10	**1.000** 25.40	**0.875** 22.23	**1.425** 36.20	**0.187** 4.75	**0.437** 11.10	**1.789** 45.44	**5.556** 141.12	**1.119** 28.42	**1.071** 27.20	**1.119** 28.42	**0.989** 25.12	**102,000** 453.72	**135,300** 601.84	**12.10** 18.007
120-4	120NP-4, 120CR-4, 120Z-4	**1.500** 38.10	**1.000** 25.40	**0.875** 22.23	**1.425** 36.20	**0.187** 4.75	**0.437** 11.10	**1.789** 45.44	**7.345** 186.56	**1.119** 28.42	**1.071** 27.20	**1.119** 28.42	**0.989** 25.12	**136,000** 604.96	**180,400** 802.46	**16.17** 24.064
120-5	120NP-5, 120CR-5, 120Z-5	**1.500** 38.10	**1.000** 25.40	**0.875** 22.23	**1.425** 36.20	**0.187** 4.75	**0.437** 11.10	**1.789** 45.44	**9.134** 232.00	**1.119** 28.42	**1.071** 27.20	**1.119** 28.42	**0.989** 25.12	**170,000** 756.20	**225,500** 1003.07	**20.24** 30.120
120-6	120NP-6, 120CR-6, 120Z-6	**1.500** 38.10	**1.000** 25.40	**0.875** 22.23	**1.425** 36.20	**0.187** 4.75	**0.437** 11.10	**1.789** 45.44	**10.923** 277.44	**1.119** 28.42	**1.071** 27.20	**1.119** 28.42	**0.989** 25.12	**204,000** 907.44	**270,600** 1203.69	**24.20** 36.014
120-8	120NP-8, 120CR-8, 120Z-8	**1.500** 38.10	**1.000** 25.40	**0.875** 22.23	**1.425** 36.20	**0.187** 4.75	**0.437** 11.10	**1.789** 45.44	**14.501** 368.33	**1.119** 28.42	**1.071** 27.20	**1.119** 28.42	**0.989** 25.12	**272,000** 1209.92	**360,800** 1604.92	**32.27** 48.023

NOTE: Dimensions are subject to change. Contact your Drives representative to obtain certified prints for design and construction.

140 – 1.750 IN. PITCH

- Cut-to-length chain available.
- Multiple strand 140-3 through 140-8 only available with through-hardened pin in riveted and cottered styles.

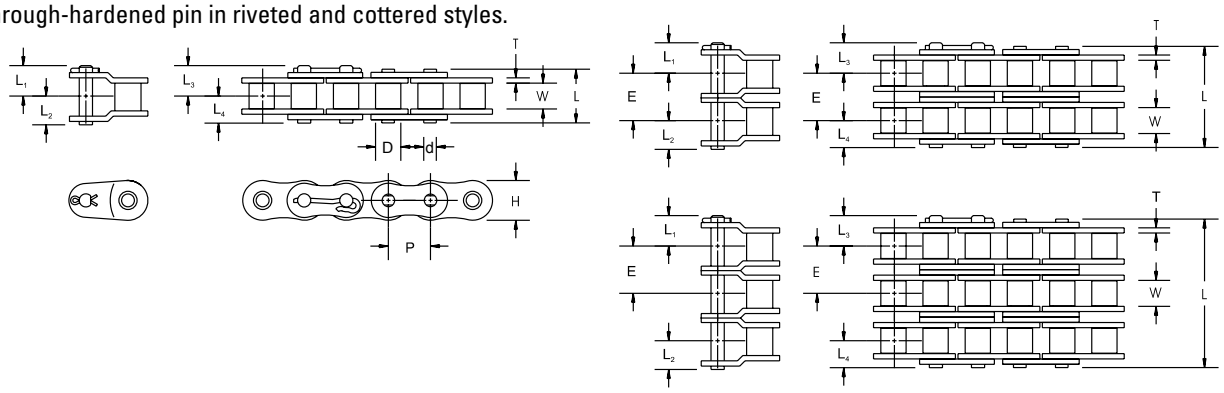

TABLE 90. 140 – 1.750 in. (44.45 mm) PITCH CHAIN DIMENSIONS

Chain No. NP = Nickel Plated (see page 106). CR = Silver Shield® (see page 107). CH = Extended Life CHP® (see page 103). Z = High Strength – Through-Hardened Pin with Ballized plate (see page 93).		Pitch	Min. Roller Link Inside Width	Roller Dia.	Link Plate		Pin Dia.	Trans-verse Pitch	Pin					Average Tensile Strength (Case-Hardened Pin)	Average Tensile Strength (Through-Hardened Pin)	Average Weight
		P	W	D	H	T	d	E	L	L_1	L_2	L_3	L_4			
		in. mm	**in.** mm	**in.** mm	**in.** mm	**in.** mm	**in.** mm	**in.** mm	**in.** mm	**in.** mm	**in.** mm	**in.** mm	**in.** mm	**lbs.** kN	**lbs.** kN	**lbs./ft.** kg/m
140-1	140NP-1, 140CR-1, 140CH-1, 140Z-1	**1.750** 44.45	**1.000** 25.40	**1.000** 25.40	**1.663** 42.24	**0.220** 5.59	**0.500** 12.70	– –	**2.136** 54.25	**1.253** 31.83	**1.150** 29.21	**1.253** 31.83	**1.068** 27.13	**46,000** 204.62	**57,450** 255.55	**5.14** 7.649
140-2	140NP-2, 140CR-2, 140CH-2, 140Z-2	**1.750** 44.45	**1.000** 25.40	**1.000** 25.40	**1.663** 42.24	**0.220** 5.59	**0.500** 12.70	**1.924** 48.87	**4.060** 103.12	**1.253** 31.83	**1.150** 29.21	**1.253** 31.83	**1.068** 27.13	**92,000** 409.24	**114,900** 511.10	**10.27** 15.283
140-3	140NP-3, 140CR-3, 140Z-3	**1.750** 44.45	**1.000** 25.40	**1.000** 25.40	**1.663** 42.24	**0.220** 5.59	**0.500** 12.70	**1.924** 48.87	**5.984** 151.99	**1.253** 31.83	**1.150** 29.21	**1.253** 31.83	**1.068** 27.13	**138,000** 613.85	**172,350** 766.65	**15.29** 22.754
140-4	140NP-4, 140CR-4, 140Z-4	**1.750** 44.45	**1.000** 25.40	**1.000** 25.40	**1.663** 42.24	**0.220** 5.59	**0.500** 12.70	**1.924** 48.87	**7.908** 200.86	**1.253** 31.83	**1.150** 29.21	**1.253** 31.83	**1.068** 27.13	**184,000** 818.47	**229,800** 1022.20	**20.46** 30.448
140-5	140NP-5, 140CR-5, 140Z-5	**1.750** 44.45	**1.000** 25.40	**1.000** 25.40	**1.663** 42.24	**0.220** 5.59	**0.500** 12.70	**1.924** 48.87	**9.832** 249.73	**1.253** 31.83	**1.150** 29.21	**1.253** 31.83	**1.068** 27.13	**230,000** 1023.09	**287,250** 1277.75	**25.52** 37.978
140-6	140NP-6, 140CR-6, 140Z-6	**1.750** 44.45	**1.000** 25.40	**1.000** 25.40	**1.663** 42.24	**0.220** 5.59	**0.500** 12.70	**1.924** 48.87	**11.756** 298.60	**1.253** 31.83	**1.150** 29.21	**1.253** 31.83	**1.068** 27.13	**276,000** 1227.71	**344,700** 1533.30	**30.69** 45.672
140-8	140NP-8, 140CR-8, 140Z-8	**1.750** 44.45	**1.000** 25.40	**1.000** 25.40	**1.663** 1.66	**0.220** 5.59	**0.500** 12.70	**1.924** 48.87	**15.604** 396.34	**1.253** 31.83	**1.150** 29.21	**1.253** 31.83	**1.068** 27.13	**368,000** 1636.95	**459,600** 2044.40	**40.92** 60.896

NOTE: Dimensions are subject to change. Contact your Drives representative to obtain certified prints for design and construction.

160 – 2.000 IN. PITCH

- Cut-to-length chain available.
- Multiple strand 160-3 through 160-8 only available with through-hardened pin in riveted and cottered styles.

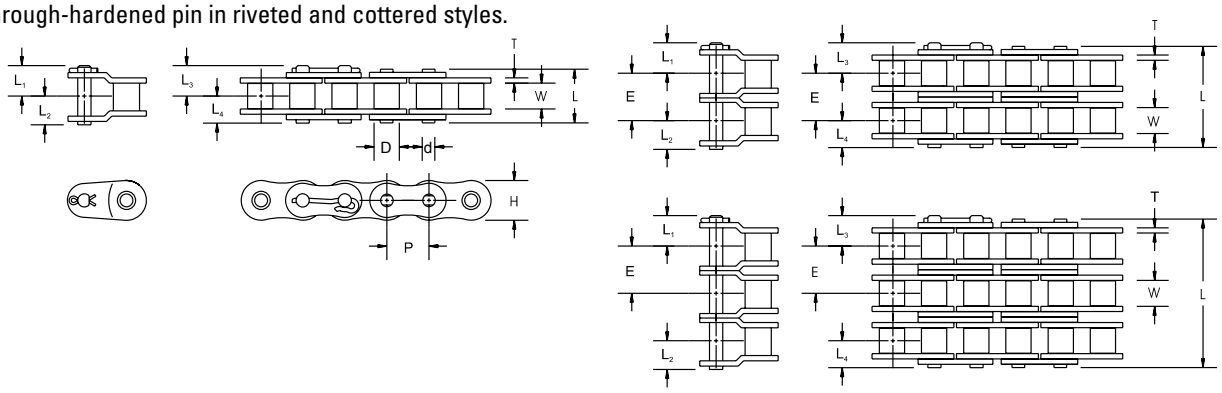

TABLE 91. 160 – 2.000 in. (50.8 mm) PITCH CHAIN DIMENSIONS

Chain No.		Pitch	Min. Roller Link Inside Width	Roller Dia.	Link Plate		Pin Dia.	Trans-verse Pitch	Pin					Average Tensile Strength (Case-Hardened Pin)	Average Tensile Strength (Through-Hardened Pin)	Average Weight
NP = Nickel Plated (see page 106). CR = Silver Shield® (see page 107). CH = Extended Life CHP® (see page 103). Z = High Strength – Through-Hardened Pin with Ballized plate (see page 93).		P	W	D	H	T	d	E	L	L_1	L_2	L_3	L_4			
		in. mm	**in.** mm	**in.** mm	**in.** mm	**in.** mm	**in.** mm	**in.** mm	**in.** mm	**in.** mm	**in.** mm	**in.** mm	**in.** mm	**lbs.** kN	**lbs.** kN	**lbs./ft.** kg/m
160-1	160NP-1, 160CR-1, 160CH-1, 160Z-1	**2.000** 50.80	**1.250** 31.75	**1.126** 28.60	**1.899** 48.23	**0.252** 6.40	**0.563** 14.30	**–** –	**2.538** 64.47	**1.454** 36.93	**1.370** 34.80	**1.454** 36.93	**1.269** 32.23	**58,000** 258.00	**72,800** 323.83	**6.60** 9.822
160-2	160NP-2, 160CR-2, 160CH-2, 160Z-2	**2.000** 50.80	**1.250** 31.75	**1.126** 28.60	**1.899** 48.23	**0.252** 6.40	**0.563** 14.30	**2.305** 58.55	**4.843** 123.01	**1.454** 36.93	**1.370** 34.80	**1.454** 36.93	**1.269** 32.23	**116,000** 515.99	**145,600** 647.66	**13.21** 19.659
160-3	160NP-3, 160CR-3, 160Z-3	**2.000** 50.80	**1.250** 31.75	**1.126** 28.60	**1.899** 48.23	**0.252** 6.40	**0.563** 14.30	**2.305** 58.55	**7.148** 181.56	**1.454** 36.93	**1.370** 34.80	**1.454** 36.93	**1.269** 32.23	**174,000** 773.99	**218,400** 971.49	**20.79** 30.939
160-4	160NP-4, 160CR-4, 160Z-4	**2.000** 50.80	**1.250** 31.75	**1.126** 28.60	**1.899** 48.23	**0.252** 6.40	**0.563** 14.30	**2.305** 58.55	**9.453** 240.11	**1.454** 36.93	**1.370** 34.80	**1.454** 36.93	**1.269** 32.23	**232,000** 1031.99	**291,200** 1295.32	**27.83** 41.416
160-5	160NP-5, 160CR-5, 160Z-5	**2.000** 50.80	**1.250** 31.75	**1.126** 28.60	**1.899** 48.23	**0.252** 6.40	**0.563** 14.30	**2.305** 58.55	**11.758** 298.65	**1.454** 36.93	**1.370** 34.80	**1.454** 36.93	**1.269** 32.23	**290,000** 1289.98	**364,000** 1619.15	**34.76** 51.729
160-6	160NP-6, 160CR-6, 160Z-6	**2.000** 50.80	**1.250** 31.75	**1.126** 28.60	**1.899** 48.23	**0.252** 6.40	**0.563** 14.30	**2.305** 58.55	**14.063** 357.20	**1.454** 36.93	**1.370** 34.80	**1.454** 36.93	**1.269** 32.23	**348,000** 1547.98	**436,800** 1942.98	**41.69** 62.042
160-8	160NP-8, 160CR-8, 160Z-8	**2.000** 50.80	**1.250** 31.75	**1.126** 28.60	**1.899** 48.23	**0.252** 6.40	**0.563** 14.30	**2.305** 58.55	**18.673** 474.29	**1.454** 36.93	**1.370** 34.80	**1.454** 36.93	**1.269** 32.23	**406,000** 1805.98	**582,400** 2590.64	**55.50** 82.593

NOTE: Dimensions are subject to change. Contact your Drives representative to obtain certified prints for design and construction.

180 – 2.250 IN. PITCH

- Cut-to-length chain available.

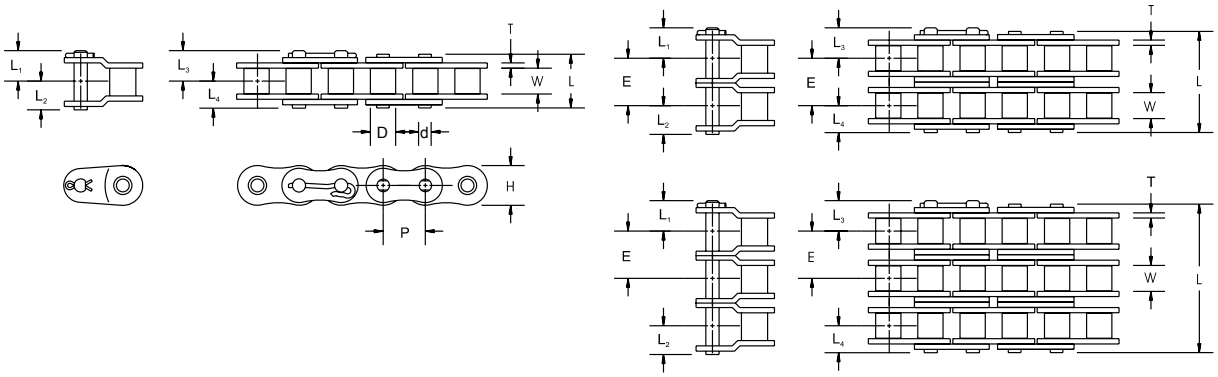

TABLE 92. 180 – 2.250 in. (57.15 mm) PITCH CHAIN DIMENSIONS

Chain No.		Pitch	Min. Roller Link Inside Width	Roller Dia.	Link Plate		Pin Dia.	Trans-verse Pitch	Pin					Average Tensile Strength (Through-Hardened Pin)	Average Weight
NP = Nickel Plated (see page 106). CR = Silver Shield® (see page 107). CH = Extended Life CHP® (see page 103). Z = High Strength – Through-Hardened Pin with Ballized plate (see page 93).		P	W	D	H	T	d	E	L	L_1	L_2	L_3	L_4		
		in. mm	**in.** mm	**in.** mm	**in.** mm	**in.** mm	**in.** mm	**in.** mm	**in.** mm	**in.** mm	**in.** mm	**in.** mm	**in.** mm	**lbs.** kN	**lbs./ft.** kg/m
180-1	180NP-1, 180CR-1, 180CH-1, 180Z-1	**2.250** 57.15	**1.400** 35.56	**1.406** 35.71	**2.132** 54.15	**0.281** 7.14	**0.687** 17.45	**–** –	**2.780** 70.61	**1.561** 39.65	**1.390** 35.31	**1.561** 39.65	**1.390** 35.31	**95,000** 422.58	**9.10** 13.542
180-2	180NP-2, 180CR-2, 180CH-2, 180Z-2	**2.250** 57.15	**1.400** 35.56	**1.406** 35.71	**2.132** 54.15	**0.281** 7.14	**0.687** 17.45	**2.592** 65.84	**5.372** 136.45	**1.561** 39.65	**1.390** 35.31	**1.561** 39.65	**1.390** 35.31	**190,000** 845.16	**18.10** 26.936
180-3	180NP-3, 180CR-3, 180Z-3	**2.250** 57.15	**1.400** 35.56	**1.406** 35.71	**2.132** 54.15	**0.281** 7.14	**0.687** 17.45	**2.592** 65.84	**7.964** 202.29	**1.561** 39.65	**1.390** 35.31	**1.561** 39.65	**1.390** 35.31	**285,000** 1267.74	**27.01** 40.195
180-4	180NP-4, 180CR-4, 180Z-4	**2.250** 57.15	**1.400** 35.56	**1.406** 35.71	**2.132** 54.15	**0.281** 7.14	**0.687** 17.45	**2.592** 65.84	**10.556** 268.12	**1.561** 39.65	**1.390** 35.31	**1.561** 39.65	**1.390** 35.31	**380,000** 1690.32	**35.91** 53.440

NOTE: Dimensions are subject to change. Contact your Drives representative to obtain certified prints for design and construction.

200 – 2.500 IN. PITCH

- Cut-to-length chain available.

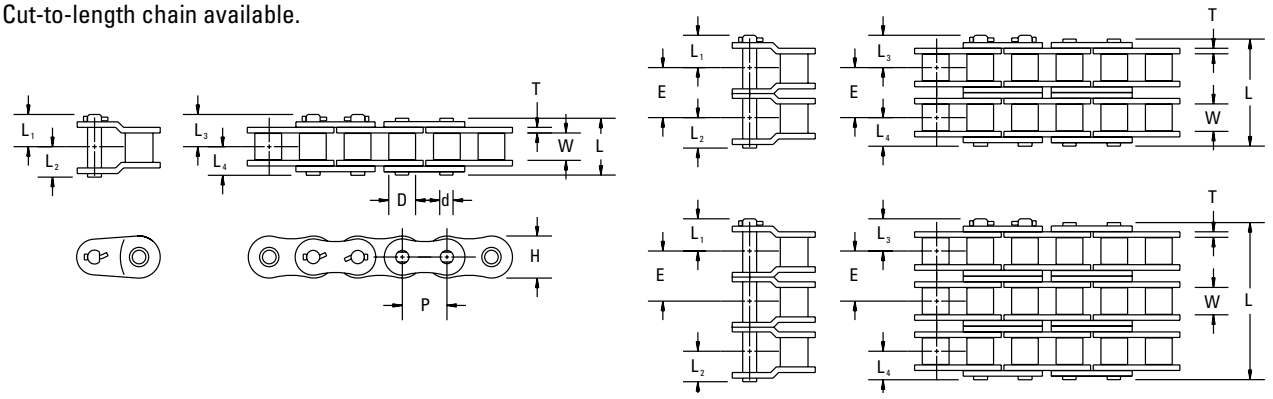

TABLE 93. 200 – 2.500 in. (63.5 mm) PITCH CHAIN DIMENSIONS

Chain No.		Pitch	Min. Roller Link Inside Width	Roller Dia.	Link Plate		Pin Dia.	Trans-verse Pitch	Pin					Average Tensile Strength (Through-Hardened Pin)	Average Weight
NP = Nickel Plated (see page 106). CR = Silver Shield® (see page 107). CH = Extended Life CHP® (see page 103). Z = High Strength – Through-Hardened Pin with Ballized plate (see page 93).		P	W	D	H	T	d	E	L	L_1	L_2	L_3	L_4		
		in. mm	**in.** mm	**in.** mm	**in.** mm	**in.** mm	**in.** mm	**in.** mm	**in.** mm	**in.** mm	**in.** mm	**in.** mm	**in.** mm	**lbs.** kN	**lbs./ft.** kg/m
200-1	200NP-1, 200CR-1, 200CH-1, 200Z-1	**2.500** 63.50	**1.500** 38.10	**1.562** 39.67	**2.312** 58.72	**0.312** 7.92	**0.781** 19.84	– –	**3.088** 78.44	**1.889** 47.98	**1.544** 39.22	**1.889** 47.98	**1.544** 39.22	**100,000** 444.82	**10.90** 16.221
200-2	200NP-2, 200CR-2, 200CH-2, 200Z-2	**2.500** 63.50	**1.500** 38.10	**1.562** 39.67	**2.312** 58.72	**0.312** 7.92	**0.781** 19.84	**2.817** 71.55	**5.905** 149.99	**1.889** 47.98	**1.544** 39.22	**1.889** 47.98	**1.544** 39.22	**200,000** 889.64	**21.00** 31.251
200-3	200NP-3, 200CR-3, 200Z-3	**2.500** 63.50	**1.500** 38.10	**1.562** 39.67	**2.312** 58.72	**0.312** 7.92	**0.781** 19.84	**2.817** 71.55	**8.722** 221.54	**1.889** 47.98	**1.544** 39.22	**1.889** 47.98	**1.544** 39.22	**300,000** 1334.47	**31.50** 46.877
200-4	200NP-4, 200CR-4, 200Z-4	**2.500** 63.50	**1.500** 38.10	**1.562** 39.67	**2.312** 58.72	**0.312** 7.92	**0.781** 19.84	**2.817** 71.55	**11.539** 293.09	**1.889** 47.98	**1.544** 39.22	**1.889** 47.98	**1.544** 39.22	**400,000** 1779.29	**42.10** 62.652

NOTE: Dimensions are subject to change. Contact your Drives representative to obtain certified prints for design and construction.

240 – 3.000 IN. PITCH

- Cut-to-length chain available.

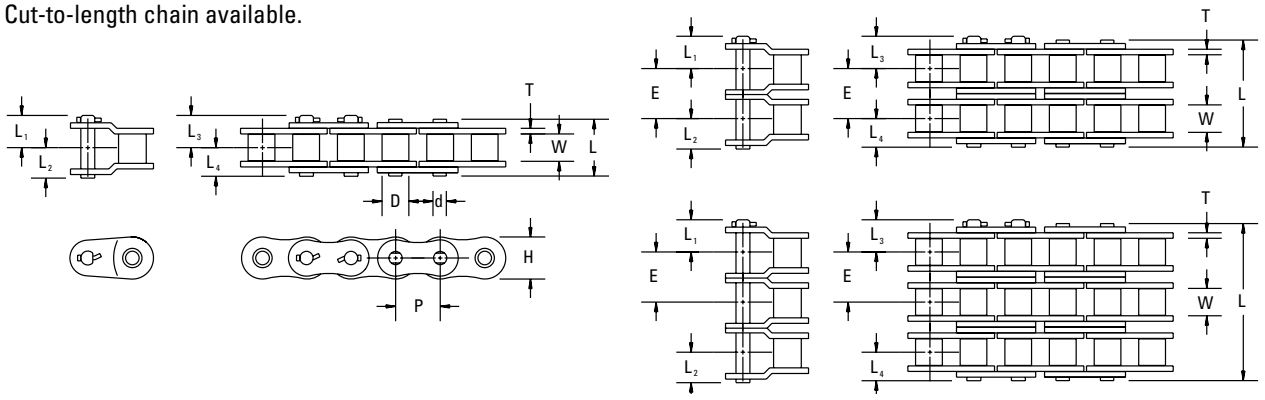

TABLE 94. 3.000 in. (76.2 mm) PITCH CHAIN DIMENSIONS

Chain No. (NP = Nickel Plated (see page 106). CR = Silver Shield® (see page 107). CH = Extended Life CHP® (see page 103). Z = High Strength – Through-Hardened Pin with Ballized plate (see page 93).)		Pitch	Min. Roller Link Inside Width	Roller Dia.	Link Plate		Pin Dia.	Trans-verse Pitch	Pin					Average Tensile Strength (Through-Hardened Pin)	Average Weight
		P	W	D	H	T	d	E	L	L_1	L_2	L_3	L_4		
		in. mm	**in.** mm	**in.** mm	**in.** mm	**in.** mm	**in.** mm	**in.** mm	**in.** mm	**in.** mm	**in.** mm	**in.** mm	**in.** mm	**lbs.** kN	**lbs./ft.** kg/m
240-1	240NP-1, 240CR-1, 240CH-1, 240Z-1	**3.000** 76.20	**1.864** 47.35	**1.875** 47.63	**2.812** 71.42	**0.375** 9.53	**0.937** 23.80	– –	**3.708** 94.18	**2.212** 56.18	**1.854** 47.09	**2.212** 56.18	**1.854** 47.09	**157,800** 701.93	**16.40** 24.406
240-2	240NP-2, 240CR-2, 240CH-2, 240Z-2	**3.000** 76.20	**1.864** 47.35	**1.875** 47.63	**2.812** 71.42	**0.375** 9.53	**0.937** 23.80	**3.458** 87.83	**7.166** 182.02	**2.212** 56.18	**1.854** 47.09	**2.212** 56.18	**1.854** 47.09	**315,600** 1,403.86	**32.20** 47.919
240-3	240NP-3, 240CR-3, 240Z-3	**3.000** 76.20	**1.864** 47.35	**1.875** 47.63	**2.812** 71.42	**0.375** 9.53	**0.937** 23.80	**3.458** 87.83	**10.624** 269.85	**2.212** 56.18	**1.854** 47.09	**2.212** 56.18	**1.854** 47.09	**473,400** 2,105.79	**49.40** 73.515
240-4	240NP-4, 240CR-4, 240Z-4	**3.000** 76.20	**1.864** 47.35	**1.875** 47.63	**2.812** 71.42	**0.375** 9.53	**0.937** 23.80	**3.458** 87.83	**14.082** 357.68	**2.212** 56.18	**1.854** 47.09	**2.212** 56.18	**1.854** 47.09	**631,200** 2,807.72	**65.70** 97.772

NOTE: Dimensions are subject to change. Contact your Drives representative to obtain certified prints for design and construction.
NOTE: 35, 41, 40 and 50 are riveted only, 60 - 240 are available in riveted and cottered.

HEAVY SERIES ROLLER CHAIN PRODUCTS

HR RIVETED SERIES CHAIN

Case-hardened Pins

- Offset links available.
- Cut-to-length chain available.
- 60H slip-fit spring clip connector standard. Cotter available upon request.
- 80H – 120H slip-fit, hook-style cotter connecting link standard. Press-fit available upon request.
- Other multiple-wide sizes available.
- Cotter style available upon request.

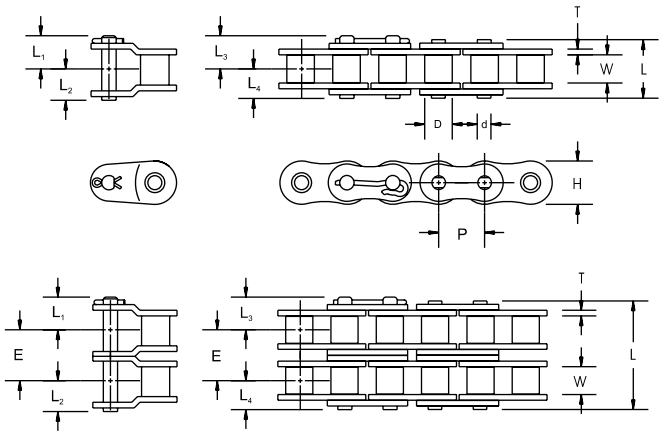

TABLE 95. HR RIVETED SERIES CHAIN DIMENSIONS

Chain No.	Pitch	Width Between L.P.	Roller Dia.	Link Plate		Pin Dia.	Transverse Pitch	Pin					Average Tensile Strength (Case-Hardened Pin)	Average Weight
	P	W	D	H	T	d	E	L	L_1	L_2	L_3	L_4		
	in. mm	**in.** mm	**in.** mm	**in.** mm	**in.** mm	**in.** mm	**in.** mm	**in.** mm	**in.** mm	**in.** mm	**in.** mm	**in.** mm	**lbs.** kN	**lbs./ft.** kg/m
60H-1R	**0.750** 19.05	**0.500** 12.70	**0.469** 11.91	**0.709** 18.01	**0.125** 3.18	**0.234** 5.94	– –	**1.140** 28.96	**0.650** 16.51	**0.570** 14.48	**0.650** 16.51	**0.570** 14.48	**8,500** 37.81	**1.265** 1.883
60H-2R	**0.750** 19.05	**0.500** 12.70	**0.469** 11.91	**0.709** 18.01	**0.125** 3.18	**0.234** 5.94	**1.028** 26.11	**2.160** 54.86	**0.650** 16.51	**0.570** 14.48	**0.650** 16.51	**0.570** 14.48	**17,000** 75.62	**2.637** 3.924
60H-3R	**0.750** 19.05	**0.500** 12.70	**0.469** 11.91	**0.709** 18.01	**0.125** 3.18	**0.234** 5.94	**1.028** 26.11	**3.196** 81.18	**0.650** 16.51	**0.570** 14.48	**0.650** 16.51	**0.570** 14.48	**25,500** 113.43	**4.010** 5.968
80H-1R	**1.000** 25.40	**0.625** 15.88	**0.625** 15.88	**0.949** 24.10	**0.156** 3.96	**0.312** 7.92	– –	**1.413** 35.89	**0.839** 21.31	**0.707** 17.96	**0.839** 21.31	**0.707** 17.96	**14,500** 64.50	**2.462** 3.664
80H-2R	**1.000** 25.40	**0.625** 15.88	**0.625** 15.88	**0.949** 24.10	**0.156** 3.96	**0.312** 7.92	**1.283** 32.59	**2.694** 68.43	**0.839** 21.31	**0.707** 17.96	**0.839** 21.31	**0.707** 17.96	**29,000** 129.00	**4.344** 6.465
80H-3R	**1.000** 25.40	**0.625** 15.88	**0.625** 15.88	**0.949** 24.10	**0.156** 3.96	**0.312** 7.92	**1.283** 32.59	**3.977** 101.02	**0.839** 21.31	**0.707** 17.96	**0.839** 21.31	**0.707** 17.96	**43,500** 193.50	**6.569** 9.776
100H-1R	**1.250** 31.75	**0.750** 19.05	**0.750** 19.05	**1.186** 30.12	**0.187** 4.75	**0.375** 9.53	– –	**1.725** 43.82	**0.993** 25.22	**0.863** 21.92	**0.993** 25.22	**0.863** 21.92	**24,000** 106.76	**3.223** 4.796
100H-2R	**1.250** 31.75	**0.750** 19.05	**0.750** 19.05	**1.186** 30.12	**0.187** 4.75	**0.375** 9.53	**1.539** 39.09	**3.260** 82.80	**0.993** 25.22	**0.863** 21.92	**0.993** 25.22	**0.863** 21.92	**48,000** 213.51	**6.356** 9.459
100H-3R	**1.250** 31.75	**0.750** 19.05	**0.750** 19.05	**1.186** 30.12	**0.187** 4.75	**0.375** 9.53	**1.539** 39.09	**4.799** 121.89	**0.993** 25.22	**0.863** 21.92	**0.993** 25.22	**0.863** 21.92	**72,000** 320.27	**9.579** 14.255
120H-1R	**1.500** 38.10	**1.000** 25.40	**0.875** 22.23	**1.425** 36.20	**0.219** 5.56	**0.437** 11.10	– –	**2.085** 52.96	**1.186** 30.12	**1.043** 26.49	**1.186** 30.12	**1.043** 26.49	**34,000** 151.24	**4.614** 6.866
120H-2R	**1.500** 38.10	**1.000** 25.40	**0.875** 22.23	**1.425** 36.20	**0.219** 5.56	**0.437** 11.10	**1.924** 48.87	**4.010** 101.85	**1.186** 30.12	**1.043** 26.49	**1.186** 30.12	**1.043** 26.49	**68,000** 302.48	**9.161** 13.633
120H-3R	**1.500** 38.10	**1.000** 25.40	**0.875** 22.23	**1.425** 36.20	**0.219** 5.56	**0.437** 11.10	**1.924** 48.87	**5.934** 150.72	**1.186** 30.12	**1.043** 26.49	**1.186** 30.12	**1.043** 26.49	**102,000** 453.72	**13.650** 20.313

NOTE: Dimensions subject to change. Contact your Drives representative to obtain certified prints for design and construction.

HZ RIVETED AND COTTERED SERIES CHAIN

Through-hardened Pins

HZ series chain features include:

- Through-hardened pins are used for higher working load capacity and additional resistance to fatigue in heavy load application.
- Ballized pin-plate, middle-bar and bushing-plate holes made to precision tolerances provide increased bearing area and press fits, improving fatigue life and working loads.
- Wide-waisted link plates are manufactured with maximized ball height from special alloy steels for added strength. The wide link plate profile improves stress distribution, leading to improved fatigue resistance and enhanced performance.

HZ series chain has the same dimensions as ANSI-standard heavy series chain.

- Multiple-strand widths available in all pitch sizes listed below.
- Riveted endless construction standard/suggested for certain applications.
- Size 264 chain is produced with a heavy series side plate (0.375 in. thick plate material) and a larger diameter pin, which provides greater bearing area and improved wear life. 264 chain will fit on the same sprockets as 200H.
- Please consult your Drives representative for maximum allowable loads.

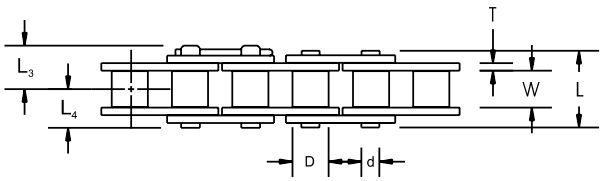

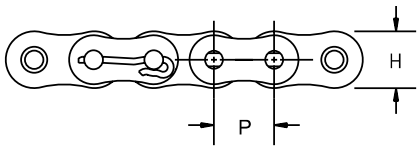

TABLE 96. HZ RIVETED AND COTTERED SERIES CHAIN DIMENSIONS

Chain No.	Pitch P	Width Between L.P. W	Roller Dia. D	Link Plate H	Link Plate T	Pin Dia. d	Transverse Pitch	Pin L	Pin L_3	Pin L_4	Average Tensile Strength (Through-Hardened Pins)	Average Weight
	in. mm	**in.** mm	**in.** mm	**in.** mm	**in.** mm	**in.** mm	**in.** mm	**in.** mm	**in.** mm	**in.** mm	**lbs.** kN	**lbs./ft.** kg/m
60HZ-1R	**0.750** 19.05	**0.500** 12.70	**0.469** 11.91	**0.709** 18.01	**0.125** 3.18	**0.234** 5.94	**1.028** 26.11	**1.140** 28.96	**0.650** 16.51	**0.570** 14.48	**12,500** 55.60	**1.265** 1.883
80HZ-1R	**1.000** 25.40	**0.625** 15.88	**0.625** 15.88	**0.949** 24.10	**0.156** 3.96	**0.312** 7.92	**1.283** 32.59	**1.413** 35.89	**0.839** 21.31	**0.707** 17.96	**21,500** 95.64	**2.243** 3.338
100HZ-1R	**1.250** 31.75	**0.750** 19.05	**0.750** 19.05	**1.186** 30.12	**0.187** 4.75	**0.375** 9.53	**1.539** 39.09	**1.725** 43.82	**0.993** 25.22	**0.863** 21.92	**33,000** 146.79	**3.277** 4.877
120HZ-1R	**1.500** 38.10	**1.000** 25.40	**0.875** 22.23	**1.425** 36.20	**0.219** 5.56	**0.437** 11.10	**1.925** 48.90	**2.085** 52.96	**1.186** 30.12	**1.043** 26.49	**45,100** 200.61	**4.605** 6.853
140HZ-1R	**1.750** 44.45	**1.000** 25.40	**1.000** 25.40	**1.663** 42.24	**0.250** 6.35	**0.500** 12.70	**2.055** 52.20	**2.260** 57.40	**1.313** 33.35	**1.130** 28.70	**57,450** 255.55	**5.801** 8.633
160HZ-1R	**2.000** 50.80	**1.250** 31.75	**1.126** 28.60	**1.899** 48.23	**0.283** 7.19	**0.563** 14.30	**2.437** 61.90	**2.673** 67.89	**1.520** 38.61	**1.339** 34.01	**72,800** 323.83	**7.548** 11.233
180HZ-1R	**2.250** 57.15	**1.400** 35.56	**1.406** 35.71	**2.132** 54.15	**0.312** 7.92	**0.687** 17.45	**2.716** 68.99	**2.968** 75.39	**1.641** 41.68	**1.484** 37.69	**95,000** 422.58	**10.250** 15.254
200HZ-1R	**2.50** 63.50	**1.490** 37.85	**1.562** 39.67	**2.375** 60.33	**0.375** 9.53	**0.781** 19.84	**3.083** 78.31	**3.344** 84.94	**2.015** 51.18	**1.672** 42.47	**136,000** 604.96	**12.4** 18.45
264HZ-1R	**2.500** 63.50	**1.490** 37.85	**1.562** 39.67	**2.375** 60.33	**0.375** 9.53	**0.875** 22.23	**3.083** 78.31	**3.344** 84.94	**2.015** 51.18	**1.672** 42.47	**135,000** 600.51	**12.400** 18.453
240HZ-1R	**3.000** 76.20	**1.875** 47.63	**1.875** 47.63	**2.850** 72.39	**0.500** 12.70	**0.937** 23.80	**3.984** 101.19	**4.265** 108.33	**2.453** 62.31	**2.157** 54.79	**217,000** 965.26	**19.570** 29.123

NOTE: Dimensions subject to change. Contact your Drives representative to obtain certified prints for design and construction.

OIL FIELD ROLLER CHAIN PRODUCTS FEATURES AND BENEFITS FATIGUE/WEAR

ALL BALLIZED PLATES

Ballized pin-plate, middle-bar and bushing-plate holes made to precision tolerances provide increased bearing area and press fits, improving fatigue life and working loads.



**Fig. 41.
All ballized plates.**

WIDE-WAISTED LINK PLATES

Wide-waisted link plates are manufactured with maximized ball heights from special alloy steels for added strength. The wide link plate profile improves stress distribution, leading to improved fatigue resistance and enhanced performance.



**Fig. 42.
Wide-waisted link plates.**

THROUGH-HARDENED SHOT PEENED PINS

Through-hardened pins are hardened and shot peened, designed to provide maximum performance in demanding applications. These pins increase the fatigue strength of the chain for protection from unpredictable overloads.



**Fig. 43.
Through-hardened shot peened pins.**

SPECIAL HOOK COTTER

A full-hardened hook cotter provides greater link-plate support and up to twice the shear strength of conventional short split cotters. The easily installed hardened hook cotter is designed to retain position in high-vibration applications.



Fig. 44. Special hook cotter.

COATED T-PIN

High-shear T-pins are designed to resist corrosion and retain position in the most extreme applications. Sizes 200, 264 and 240.



Fig. 45. Coated T-pin.

SOLID ROLLERS

The solid roller allows for smooth rotation on the bushing, reducing the impact load as the chain engages the sprocket tooth.

FACTORY PRELOADED AT 50 PERCENT MUTS

Our chain is preloaded to 50 percent of minimum ultimate tensile strength (MUTS), which is especially important for applications involving fixed center-to-center sprockets without take-ups. Applications can withstand shock loads up to 50 percent of the chain's MUTS without premature elongation.

PRELUBRICATION

After final assembly, we hot-dip roller chain in a special lubricant. This process ensures that all the load-bearing surfaces are initially protected from metal-to-metal contact, improving the wear life of the chain.

NOTE: We suggest changing out the sprockets each time the chain is replaced.

PREMIUM OIL FIELD ROLLER CHAIN PRODUCTS

Typical chain locations on an oil rig

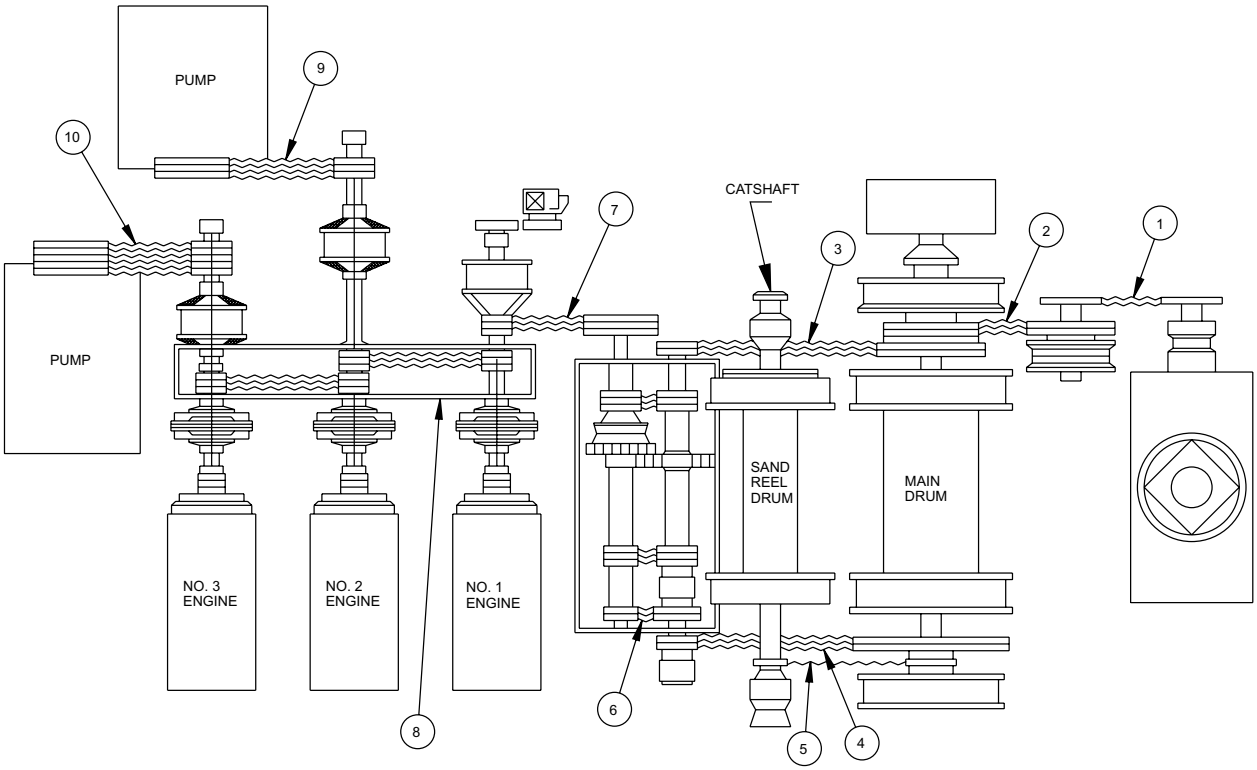

TABLE 97. DRIVES CHAIN TABLE

Chain Drive	Rig Horsepower (Kilowatt)						
	4000 (2983)	**3000** (2237)	**2000** (1491)	**1500** (1119)	**1000** (746)	**750** (559)	**500** (373)
1. Rotary Table	160-2	160-2 264-1	160-2	160-2 140-2	140-2 160-1	140-2 160-1	140-1 120-1
2. Rotary Countershaft	160-2	160-2 264-1	160-2	160-2 140-2	140-2 160-1	140-2 160-1	140-1 120-1
3. High Drum	240-3	264-3	160-4	160-3	140-3 160-2	160-2 140-2	120-3 140-2
4. Low Drum	240-3	264-3	160-4	160-3	140-3 160-2	160-2 140-3	120-3 140-2
5. Cat Shaft	160-2	160-2 264-1	160-2	160-1 140-2	160-1 140-2	160-1 140-2	140-1 120-1
6. Transmission	140-8	160-4 264-3	160-4 160-3	160-3	160-2 140-3	140-2	120-2 100-3
7. Drawworks Input	140-8	120-8	120-6	120-4	120-3 120-4	100-4	100-3 100-4
8. Compound	140-8	120-8	120-6	120-4	120-3 120-4	100-4	100-3
9. & 10. Mud Pump Drives	140-8	120-8	120-8 120-6	120-6 120-4	120-4 120-3	100-6 100-4	100-4 100-3

NOTE: Size 264 roller chain provides greater tensile strength/working load and replaces 200H chain.

OIL FIELD ROLLER CHAIN PRODUCT SPECIFICATIONS

80-1 THROUGH 240-1

- Cut-to-length chain available.
- Corrosion resistant finishes for components available upon request.
- Offsets not suggested. Please contact your Drives representative.
- T-pin cotters used on sizes 200, 264, and 240 oil field chain.
- Heavy-chain series available/MTO.
- 121 series replaces 472 series.
- Size 264 chain provides greater tensile strength/working load utilizing larger diameter pin and replaces 200H chain.

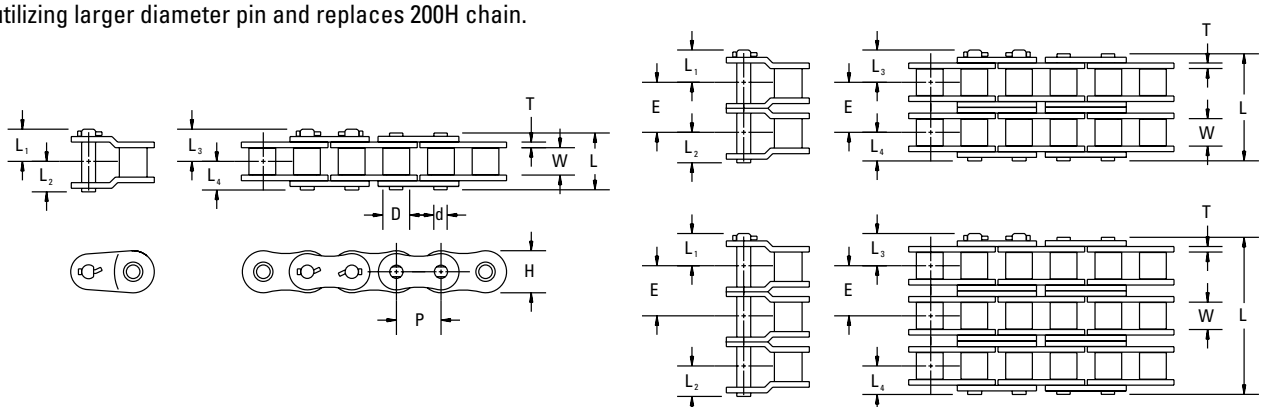

TABLE 98. API 7F OIL FIELD ROLLER CHAIN PRODUCTS

Chain No.	Pitch	Min. Roller Link Inside Width	Roller Dia.	Link Plate		Pin Dia.	Transverse Pitch	Pin					Average Tensile Strength (Through-Hardened Pin)	Average Weight
	P	W	D	H	T	d	E	L	L_1	L_2	L_3	L_4		
	in. mm	**in.** mm	**in.** mm	**in.** mm	**in.** mm	**in.** mm	**in.** mm	**in.** mm	**in.** mm	**in.** mm	**in.** mm	**in.** mm	**lbs.** kN	**lbs./ft.** kg/m
80-1 through 80-8														
80-1	**1.000** 25.40	**0.627** 15.93	**0.625** 15.88	**0.943** 23.95	**0.125** 3.18	**0.313** 7.95	– –	**1.283** 32.59	**0.768** 19.51	**0.638** 16.21	**0.857** 21.77	**0.642** 16.31	**21,500** 95.64	**1.87** 2.783
80-2	**1.000** 25.40	**0.627** 15.93	**0.625** 15.88	**0.943** 23.95	**0.125** 3.18	**0.313** 7.95	**1.155** 29.34	**2.439** 61.95	**0.768** 19.51	**0.638** 16.21	**0.857** 21.77	**0.642** 16.31	**43,000** 191.27	**3.74** 5.566
80-3	**1.000** 25.40	**0.627** 15.93	**0.625** 15.88	**0.943** 23.95	**0.125** 3.18	**0.313** 7.95	**1.155** 29.34	**3.594** 91.29	**0.768** 19.51	**0.638** 16.21	**0.857** 21.77	**0.642** 16.31	**64,500** 286.91	**5.60** 8.334
80-4	**1.000** 25.40	**0.627** 15.93	**0.625** 15.88	**0.943** 23.95	**0.125** 3.18	**0.313** 7.95	**1.155** 29.34	**4.749** 120.62	**0.768** 19.51	**0.638** 16.21	**0.857** 21.77	**0.642** 16.31	**86,000** 382.55	**7.44** 11.072
80-5	**1.000** 25.40	**0.627** 15.93	**0.625** 15.88	**0.943** 23.95	**0.125** 3.18	**0.313** 7.95	**1.155** 29.34	**5.904** 149.96	**0.768** 19.51	**0.638** 16.21	**0.857** 21.77	**0.642** 16.31	**107,500** 478.18	**9.03** 13.438
80-6	**1.000** 25.40	**0.627** 15.93	**0.625** 15.88	**0.943** 23.95	**0.125** 3.18	**0.313** 7.95	**1.155** 29.34	**7.059** 179.30	**0.768** 19.51	**0.638** 16.21	**0.857** 21.77	**0.642** 16.31	**129,000** 573.82	**10.82** 16.102
80-8	**1.000** 25.40	**0.627** 15.93	**0.625** 15.88	**0.943** 23.95	**0.125** 3.18	**0.313** 7.95	**1.155** 29.34	**9.369** 237.97	**0.768** 19.51	**0.638** 16.21	**0.857** 21.77	**0.642** 16.31	**172,000** 765.09	**14.43** 21.474

NOTE: Dimensions are subject to change. Contact your Drives representative to obtain certified prints for design and construction.
NOTE: Oil field is always cottered.

Continued on next page.

Continued from previous page.

Chain No.	Pitch P	Min. Roller Link Inside Width W	Roller Dia. D	Link Plate H	Link Plate T	Pin Dia. d	Transverse Pitch E	Pin L	Pin L_1	Pin L_2	Pin L_3	Pin L_4	Average Tensile Strength (Through-Hardened Pin)	Average Weight
	in. mm	**in.** mm	**in.** mm	**in.** mm	**in.** mm	**in.** mm	**in.** mm	**in.** mm	**in.** mm	**in.** mm	**in.** mm	**in.** mm	**lbs.** kN	**lbs./ft.** kg/m
100-1 through 100-8														
100-1	**1.250** 31.75	**0.755** 19.18	**0.750** 19.05	**1.180** 29.97	**0.156** 3.96	**0.375** 9.53	– –	**1.595** 40.51	**0.908** 23.06	**0.785** 19.94	**0.912** 23.16	**0.785** 19.94	**33,000** 146.79	**2.80** 4.167
100-2	**1.250** 31.75	**0.755** 19.18	**0.750** 19.05	**1.180** 29.97	**0.156** 3.96	**0.375** 9.53	**1.411** 35.84	**2.981** 75.72	**0.908** 23.06	**0.785** 19.94	**0.912** 23.16	**0.785** 19.94	**66,000** 293.58	**5.60** 8.334
100-3	**1.250** 31.75	**0.755** 19.18	**0.750** 19.05	**1.180** 29.97	**0.156** 3.96	**0.375** 9.53	**1.411** 35.84	**4.392** 111.56	**0.908** 23.06	**0.785** 19.94	**0.912** 23.16	**0.785** 19.94	**99,000** 440.37	**8.47** 12.605
100-4	**1.250** 31.75	**0.755** 19.18	**0.750** 19.05	**1.180** 29.97	**0.156** 3.96	**0.375** 9.53	**1.411** 35.84	**5.803** 147.40	**0.908** 23.06	**0.785** 19.94	**0.912** 23.16	**0.785** 19.94	**132,000** 587.17	**11.11** 16.534
100-5	**1.250** 31.75	**0.755** 19.18	**0.750** 19.05	**1.180** 29.97	**0.156** 3.96	**0.375** 9.53	**1.411** 35.84	**7.214** 183.24	**0.908** 23.06	**0.785** 19.94	**0.912** 23.16	**0.785** 19.94	**165,000** 733.96	**13.97** 20.790
100-6	**1.250** 31.75	**0.755** 19.18	**0.750** 19.05	**1.180** 29.97	**0.156** 3.96	**0.375** 9.53	**1.411** 35.84	**8.625** 219.08	**0.908** 23.06	**0.785** 19.94	**0.912** 23.16	**0.785** 19.94	**198,000** 880.75	**16.72** 24.882
100-8	**1.250** 31.75	**0.755** 19.18	**0.750** 19.05	**1.180** 29.97	**0.156** 3.96	**0.375** 9.53	**1.411** 35.84	**11.447** 290.75	**0.908** 23.06	**0.785** 19.94	**0.912** 23.16	**0.785** 19.94	**264,000** 1174.33	**22.29** 33.171
120-1 through 120-8														
120-1	**1.500** 38.10	**1.000** 25.40	**0.875** 22.23	**1.425** 36.20	**0.187** 4.75	**0.437** 11.10	– –	**1.955** 49.66	**1.119** 28.42	**1.071** 27.20	**1.119** 28.42	**0.989** 25.12	**45,100** 200.61	**4.14** 6.161
120-2	**1.500** 38.10	**1.000** 25.40	**0.875** 22.23	**1.425** 36.20	**0.187** 4.75	**0.437** 11.10	**1.789** 45.44	**3.767** 95.68	**1.119** 28.42	**1.071** 27.20	**1.119** 28.42	**0.989** 25.12	**90,200** 401.23	**8.27** 12.307
120-3	**1.500** 38.10	**1.000** 25.40	**0.875** 22.23	**1.425** 36.20	**0.187** 4.75	**0.437** 11.10	**1.789** 45.44	**5.556** 141.12	**1.119** 28.42	**1.071** 27.20	**1.119** 28.42	**0.989** 25.12	**135,300** 601.84	**12.10** 18.007
120-4	**1.500** 38.10	**1.000** 25.40	**0.875** 22.23	**1.425** 36.20	**0.187** 4.75	**0.437** 11.10	**1.789** 45.44	**7.345** 186.56	**1.119** 28.42	**1.071** 27.20	**1.119** 28.42	**0.989** 25.12	**180,400** 802.46	**16.17** 24.064
120-5	**1.500** 38.10	**1.000** 25.40	**0.875** 22.23	**1.425** 36.20	**0.187** 4.75	**0.437** 11.10	**1.789** 45.44	**9.134** 232.00	**1.119** 28.42	**1.071** 27.20	**1.119** 28.42	**0.989** 25.12	**225,500** 1003.07	**20.24** 30.120
120-6	**1.500** 38.10	**1.000** 25.40	**0.875** 22.23	**1.425** 36.20	**0.187** 4.75	**0.437** 11.10	**1.789** 45.44	**10.923** 277.44	**1.119** 28.42	**1.071** 27.20	**1.119** 28.42	**0.989** 25.12	**270,600** 1203.69	**24.20** 36.014
120-8	**1.500** 38.10	**1.000** 25.40	**0.875** 22.23	**1.425** 36.20	**0.187** 4.75	**0.437** 11.10	**1.789** 45.44	**14.501** 368.33	**1.119** 28.42	**1.071** 27.20	**1.119** 28.42	**0.989** 25.12	**360,800** 1604.92	**32.27** 48.023
121-1 through 121-3														
121-1	**1.500** 38.10	**0.750** 19.05	**0.875** 22.23	**1.425** 36.20	**0.187** 4.75	**0.437** 11.10	– –	**1.955** 49.66	– –	– –	**0.994** 25.25	**0.864** 21.95	**45,100** 200.61	**3.30** 4.911
121-2	**1.250** 31.75	**0.755** 19.18	**0.750** 19.05	**1.180** 29.97	**0.156** 3.96	**0.375** 9.53	**1.546** 39.27	**3.274** 83.16	– –	– –	**0.994** 25.25	**0.864** 21.95	**90,200** 401.23	**6.76** 10.060
121-3	**1.250** 31.75	**0.755** 19.18	**0.750** 19.05	**1.180** 29.97	**0.156** 3.96	**0.375** 9.53	**1.546** 39.27	**4.820** 122.43	– –	– –	**0.994** 25.25	**0.864** 21.95	**135,300** 601.84	**10.08** 15.001

NOTE: Dimensions are subject to change. Contact your Drives representative to obtain certified prints for design and construction.
NOTE: Oil field is always cottered.

Continued on next page.

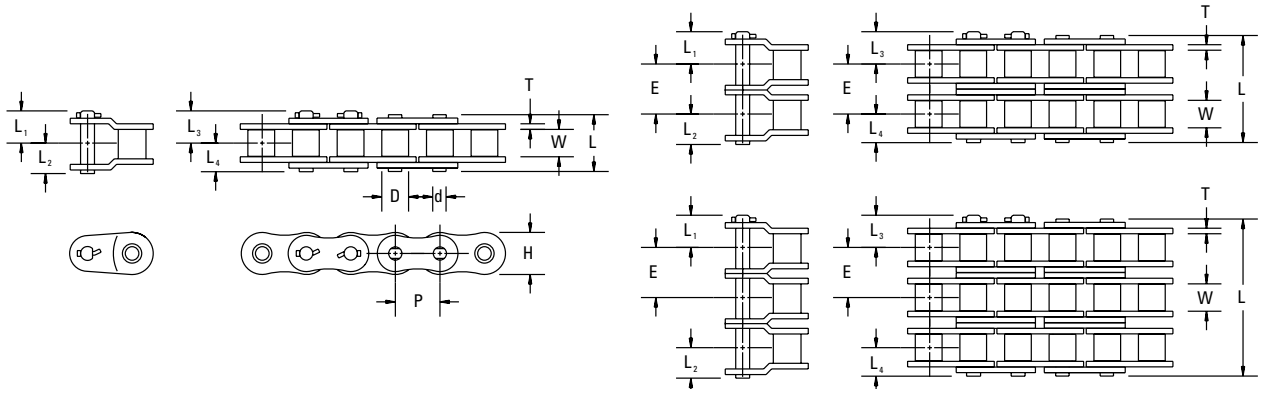

Continued from previous page.

Chain No.	Pitch P	Min. Roller Link Inside Width W	Roller Dia. D	Link Plate H	Link Plate T	Pin Dia. d	Transverse Pitch E	Pin L	Pin L_1	Pin L_2	Pin L_3	Pin L_4	Average Tensile Strength (Through-Hardened Pin)	Average Weight
	in. mm	**in.** mm	**in.** mm	**in.** mm	**in.** mm	**in.** mm	**in.** mm	**in.** mm	**in.** mm	**in.** mm	**in.** mm	**in.** mm	**lbs.** kN	**lbs./ft.** kg/m
140-1 through 140-8														
140-1	**1.750** 44.45	**1.000** 25.40	**1.000** 25.40	**1.663** 42.24	**0.220** 5.59	**0.500** 12.70	– –	**2.136** 54.25	**1.253** 31.83	**1.150** 29.21	**1.253** 31.83	**1.068** 27.13	**57,450** 255.55	**5.14** 7.649
140-2	**1.750** 44.45	**1.000** 25.40	**1.000** 25.40	**1.663** 42.24	**0.220** 5.59	**0.500** 12.70	**1.924** 48.87	**4.060** 103.12	**1.253** 31.83	**1.150** 29.21	**1.253** 31.83	**1.068** 27.13	**114,900** 511.10	**10.27** 15.283
140-3	**1.750** 44.45	**1.000** 25.40	**1.000** 25.40	**1.663** 42.24	**0.220** 5.59	**0.500** 12.70	**1.924** 48.87	**5.984** 151.99	**1.253** 31.83	**1.150** 29.21	**1.253** 31.83	**1.068** 27.13	**172,350** 766.65	**15.29** 22.754
140-4	**1.750** 44.45	**1.000** 25.40	**1.000** 25.40	**1.663** 42.24	**0.220** 5.59	**0.500** 12.70	**1.924** 48.87	**7.908** 200.86	**1.253** 31.83	**1.150** 29.21	**1.253** 31.83	**1.068** 27.13	**229,800** 1022.20	**20.46** 30.448
140-5	**1.750** 44.45	**1.000** 25.40	**1.000** 25.40	**1.663** 42.24	**0.220** 5.59	**0.500** 12.70	**1.924** 48.87	**9.832** 249.73	**1.253** 31.83	**1.150** 29.21	**1.253** 31.83	**1.068** 27.13	**287,250** 1277.75	**25.52** 37.978
140-6	**1.750** 44.45	**1.000** 25.40	**1.000** 25.40	**1.663** 42.24	**0.220** 5.59	**0.500** 12.70	**1.924** 48.87	**11.756** 298.60	**1.253** 31.83	**1.150** 29.21	**1.253** 31.83	**1.068** 27.13	**344,700** 1533.30	**30.69** 45.672
140-8	**1.750** 44.45	**1.000** 25.40	**1.000** 25.40	**1.663** 42.24	**0.220** 5.59	**0.500** 12.70	**1.924** 48.87	**15.604** 396.34	**1.253** 31.83	**1.150** 29.21	**1.253** 31.83	**1.068** 27.13	**459,600** 2044.40	**40.92** 60.896
160-1 through 160-8														
160-1	**2.000** 50.80	**1.250** 31.75	**1.126** 28.60	**1.899** 48.23	**0.252** 6.40	**0.563** 14.30	– –	**2.538** 64.47	**1.454** 36.93	**1.370** 34.80	**1.454** 36.93	**1.269** 32.23	**72,800** 323.83	**6.60** 9.822
160-2	**2.000** 50.80	**1.250** 31.75	**1.126** 28.60	**1.899** 48.23	**0.252** 6.40	**0.563** 14.30	**2.305** 58.55	**4.843** 123.01	**1.454** 36.93	**1.370** 34.80	**1.454** 36.93	**1.269** 32.23	**145,600** 647.66	**13.21** 19.659
160-3	**2.000** 50.80	**1.250** 31.75	**1.126** 28.60	**1.899** 48.23	**0.252** 6.40	**0.563** 14.30	**2.305** 58.55	**7.148** 181.56	**1.454** 36.93	**1.370** 34.80	**1.454** 36.93	**1.269** 32.23	**218,400** 971.49	**20.79** 30.939
160-4	**2.000** 50.80	**1.250** 31.75	**1.126** 28.60	**1.899** 48.23	**0.252** 6.40	**0.563** 14.30	**2.305** 58.55	**9.453** 240.11	**1.454** 36.93	**1.370** 34.80	**1.454** 36.93	**1.269** 32.23	**291,200** 1295.32	**27.83** 41.416
160-5	**2.000** 50.80	**1.250** 31.75	**1.126** 28.60	**1.899** 48.23	**0.252** 6.40	**0.563** 14.30	**2.305** 58.55	**11.758** 298.65	**1.454** 36.93	**1.370** 34.80	**1.454** 36.93	**1.269** 32.23	**364,000** 1619.15	**34.76** 51.729
160-6	**2.000** 50.80	**1.250** 31.75	**1.126** 28.60	**1.899** 48.23	**0.252** 6.40	**0.563** 14.30	**2.305** 58.55	**14.063** 357.20	**1.454** 36.93	**1.370** 34.80	**1.454** 36.93	**1.269** 32.23	**436,800** 1942.98	**41.69** 62.042
160-8	**2.000** 50.80	**1.250** 31.75	**1.126** 28.60	**1.899** 48.23	**0.252** 6.40	**0.563** 14.30	**2.305** 58.55	**18.673** 474.29	**1.454** 36.93	**1.370** 34.80	**1.454** 36.93	**1.269** 32.23	**582,400** 2590.64	**55.50** 82.593

NOTE: Dimensions are subject to change. Contact your Drives representative to obtain certified prints for design and construction.
NOTE: Oil field is always cottered.

Continued on next page.

Continued from previous page.

Chain No.	Pitch P	Min. Roller Link Inside Width W	Roller Dia. D	Link Plate H	Link Plate T	Pin Dia. d	Transverse Pitch E	Pin L	Pin L_1	Pin L_2	Pin L_3	Pin L_4	Average Tensile Strength (Through-Hardened Pin)	Average Weight
	in. mm	**in.** mm	**in.** mm	**in.** mm	**in.** mm	**in.** mm	**in.** mm	**in.** mm	**in.** mm	**in.** mm	**in.** mm	**in.** mm	**lbs.** kN	**lbs./ft.** kg/m
180-1 through 180-4														
180-1	**2.250** 57.15	**1.400** 35.56	**1.406** 35.71	**2.132** 54.15	**0.281** 7.14	**0.687** 17.45	– –	**2.780** 70.61	**1.561** 39.65	**1.390** 35.31	**1.561** 39.65	**1.390** 35.31	**95,000** 422.58	**9.10** 13.542
180-2	**2.250** 57.15	**1.400** 35.56	**1.406** 35.71	**2.132** 54.15	**0.281** 7.14	**0.687** 17.45	**2.592** 65.84	**5.372** 136.45	**1.561** 39.65	**1.390** 35.31	**1.561** 39.65	**1.390** 35.31	**190,000** 845.16	**18.10** 26.936
180-3	**2.250** 57.15	**1.400** 35.56	**1.406** 35.71	**2.132** 54.15	**0.281** 7.14	**0.687** 17.45	**2.592** 65.84	**7.964** 202.29	**1.561** 39.65	**1.390** 35.31	**1.561** 39.65	**1.390** 35.31	**285,000** 1267.74	**27.01** 40.195
180-4	**2.250** 57.15	**1.400** 35.56	**1.406** 35.71	**2.132** 54.15	**0.281** 7.14	**0.687** 17.45	**2.592** 65.84	**10.556** 268.12	**1.561** 39.65	**1.390** 35.31	**1.561** 39.65	**1.390** 35.31	**380,000** 1690.32	**35.91** 53.440
200-1 through 200-4														
200-1	**2.500** 63.50	**1.500** 38.10	**1.562** 39.67	**2.312** 58.72	**0.312** 7.92	**0.781** 19.84	– –	**3.088** 78.44	**1.889** 47.98	**1.544** 39.22	**1.889** 47.98	**1.544** 39.22	**100,000** 444.82	**10.90** 16.221
200-2	**2.500** 63.50	**1.500** 38.10	**1.562** 39.67	**2.312** 58.72	**0.312** 7.92	**0.781** 19.84	**2.817** 71.55	**5.905** 149.99	**1.889** 47.98	**1.544** 39.22	**1.889** 47.98	**1.544** 39.22	**200,000** 889.64	**21.00** 31.251
200-3	**2.500** 63.50	**1.500** 38.10	**1.562** 39.67	**2.312** 58.72	**0.312** 7.92	**0.781** 19.84	**2.817** 71.55	**8.722** 221.54	**1.889** 47.98	**1.544** 39.22	**1.889** 47.98	**1.544** 39.22	**300,000** 1334.47	**31.50** 46.877
200-4	**2.500** 63.50	**1.500** 38.10	**1.562** 39.67	**2.312** 58.72	**0.312** 7.92	**0.781** 19.84	**2.817** 71.55	**11.539** 293.09	**1.889** 47.98	**1.544** 39.22	**1.889** 47.98	**1.544** 39.22	**400,000** 1779.29	**42.10** 62.652
264-1 through 264-4														
264-1	**2.500** 63.50	**1.490** 37.85	**1.562** 39.67	**2.375** 60.33	**0.375** 9.53	**0.875** 22.23	– –	**3.687** 93.65	**2.015** 51.18	**1.672** 42.47	**2.015** 51.18	**0.672** 17.07	**135,000** 600.51	**12.40** 18.453
264-2	**2.500** 63.50	**1.490** 37.85	**1.562** 39.67	**2.375** 60.33	**0.375** 9.53	**0.875** 22.23	**3.083** 78.31	**6.770** 171.96	**2.015** 51.18	**1.672** 42.47	**2.015** 51.18	**1.672** 42.47	**270,000** 1201.02	**24.90** 37.055
264-3	**2.500** 63.50	**1.490** 37.85	**1.562** 39.67	**2.375** 60.33	**0.375** 9.53	**0.875** 22.23	**3.083** 78.31	**9.853** 250.27	**2.015** 51.18	**1.672** 42.47	**2.015** 51.18	**1.672** 42.47	**405,000** 1801.53	**37.30** 55.509
264-4	**2.500** 63.50	**1.490** 37.85	**1.562** 39.67	**2.375** 60.33	**0.375** 9.53	**0.875** 22.23	**3.083** 78.31	**12.936** 328.57	**2.015** 51.18	**1.672** 42.47	**2.015** 51.18	**1.672** 42.47	**540,000** 2402.04	**49.80** 74.111
240-1 through 240-4														
240-1	**3.000** 76.20	**1.864** 47.35	**1.875** 47.63	**2.812** 71.42	**0.375** 9.53	**0.937** 23.80	– –	**3.708** 94.18	**2.212** 56.18	**1.854** 47.09	**2.212** 56.18	**1.854** 47.09	**157,800** 701.93	**16.40** 24.406
240-2	**3.000** 76.20	**1.864** 47.35	**1.875** 47.63	**2.812** 71.42	**0.375** 9.53	**0.937** 23.80	**3.458** 87.83	**7.166** 182.02	**2.212** 56.18	**1.854** 47.09	**2.212** 56.18	**1.854** 47.09	**315,600** 1,403.86	**32.20** 47.919
240-3	**3.000** 76.20	**1.864** 47.35	**1.875** 47.63	**2.812** 71.42	**0.375** 9.53	**0.937** 23.80	**3.458** 87.83	**10.624** 70.61	**2.212** 56.18	**1.854** 47.09	**2.212** 56.18	**1.854** 47.09	**473,400** 2,105.79	**49.40** 73.515
240-4	**3.000** 76.20	**1.864** 47.35	**1.875** 47.63	**2.812** 71.42	**0.375** 9.53	**0.937** 23.80	**3.458** 87.83	**14.082** 182.02	**2.212** 56.18	**1.854** 47.09	**2.212** 56.18	**1.854** 47.09	**631,200** 2,807.72	**65.70** 97.772
241-1														
241-1	**3.000** 76.20	**1.250** 31.75	**1.875** 47.63	**2.812** 71.42	**0.375** 9.53	**0.937** 23.80	– –	**3.094** 78.59	– –	– –	**1.905** 48.39	**1.547** 39.29	**152,200** 677.02	**16.20** 24.108

NOTE: Dimensions are subject to change. Contact your Drives representative to obtain certified prints for design and construction.
NOTE: Oil field is always cottered.

API 7F HEAVY SERIES OIL FIELD ROLLER CHAIN PRODUCTS

- Connecting link available in cottered/press fit or slip fit.
- Please consult Drives engineering for maximum allowable loads.
- Size 264 chain is produced with a heavy series side plate (0.375 in. thick plate material) and a larger diameter pin, which provides greater bearing area and improved wear life. 264 chain will fit on the same sprockets as 200H.

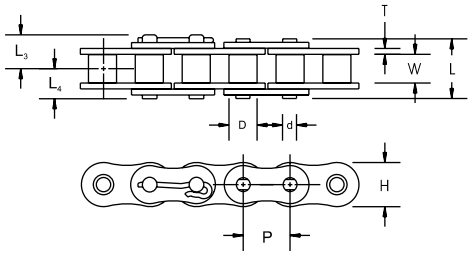

TABLE 99. A.P.I. 7F HEAVY SERIES OIL FIELD ROLLER CHAIN PRODUCTS

Chain No.	Pitch P	Min. Roller Link Inside Width W	Roller Dia. D	Link Plate H	Link Plate T	Pin. Dia. d	Transverse Pitch	Pin L	Pin L_3	Pin L_4	Average Tensile Strength Through-Hardened Pins	Average Weight
	in. mm	**in.** mm	**in.** mm	**in.** mm	**in.** mm	**in.** mm	**in.** mm	**in.** mm	**in.** mm	**in.** mm	**lbs.** kN	**lbs./ft.** kg/m
60HZ-1	**0.750** 19.05	**0.500** 12.70	**0.469** 11.91	**0.709** 18.01	**0.125** 3.18	**0.234** 5.94	**1.028** 26.11	**1.140** 28.96	**0.650** 16.51	**0.570** 14.48	**12,500** 55.60	**1.27** 1.890
80HZ-1	**1.000** 25.40	**0.625** 15.88	**0.625** 15.88	**0.949** 24.10	**0.156** 3.96	**0.312** 7.92	**1.283** 32.59	**1.413** 35.89	**0.839** 21.31	**0.707** 17.96	**21,500** 95.64	**2.24** 3.333
100HZ-1	**1.250** 31.75	**0.750** 19.05	**0.750** 19.05	**1.186** 30.12	**0.187** 4.75	**0.375** 9.53	**1.539** 39.09	**1.725** 43.82	**0.993** 25.22	**0.863** 21.92	**33,000** 146.79	**3.28** 4.881
120HZ-1	**1.500** 38.10	**1.000** 25.40	**0.875** 22.23	**1.425** 36.20	**0.219** 5.56	**0.437** 11.10	**1.925** 48.90	**2.085** 52.96	**1.186** 30.12	**1.043** 26.49	**45,100** 200.61	**4.61** 6.860
140HZ-1	**1.750** 44.45	**1.000** 25.40	**1.000** 25.40	**1.663** 42.24	**0.250** 6.35	**0.500** 12.70	**2.055** 52.20	**2.260** 57.40	**1.313** 33.35	**1.130** 28.70	**57,450** 255.55	**5.80** 8.631
160HZ-1	**2.000** 50.80	**1.250** 31.75	**1.126** 28.60	**1.899** 48.23	**0.283** 7.19	**0.563** 14.30	**2.437** 61.90	**2.673** 67.89	**1.520** 38.61	**1.339** 34.01	**72,800** 323.83	**7.55** 11.236
180HZ-1	**2.250** 57.15	**1.400** 35.56	**1.406** 35.71	**2.132** 54.15	**0.312** 7.92	**0.687** 17.45	**2.716** 68.99	**2.968** 75.39	**1.641** 41.68	**1.484** 37.69	**95,000** 422.58	**10.25** 15.254
200HZ-1	**2.50** 63.50	**1.490** 37.85	**1.562** 39.67	**2.375** 60.33	**0.375** 9.53	**0.781** 19.84	**3.083** 78.31	**3.344** 84.94	**2.015** 51.18	**1.672** 42.47	**136,000** 604.96	**12.4** 18.45
264Z-1	**2.500** 63.50	**1.490** 37.85	**1.562** 39.67	**2.375** 60.33	**0.375** 9.53	**0.875** 22.23	**3.083** 78.31	**3.344** 84.94	**2.015** 51.18	**1.672** 42.47	**135,000** 600.51	**12.40** 18.453
240HZ-1	**3.000** 76.20	**1.875** 47.63	**1.875** 47.63	**2.850** 72.39	**0.500** 12.70	**0.937** 23.80	**3.984** 101.19	**4.265** 108.33	**2.453** 62.31	**2.157** 54.79	**217,000** 965.26	**19.57** 29.123

Dimensions are subject to change. Contact Drives to obtain certified prints for design and construction.

POWER TONG CHAIN

Power tongs are used to spin and tighten drill pipe, casing, tubing or other types of pipe. In some instances they also are used to apply the final makeup torque. The chain used on the power tongs is designed to grip the pipe. We supply individual boxes of power tong chains that are cut to the specified length required for the power tong you have. Please contact your Drives representative for availability of your power tong chain.

COIL TUBING INJECTOR CHAIN

As chain interacts with the injector sprockets, positioned gripper blocks secure the tubing to advance or retract the coil within the well. Special chain pins manufactured from alloy steel are through-hardened for ductility and fatigue resistance. Use Drives coil tubing injector chain kits with OEM Carrier/Gripper blocks. Contact Drives for additional kits.

Coil Tubing Injector Chain to Fit OEM Gripper Blocks

Primary oil field chain features include:

- All ballized plates.
- Wide-waisted link plates.
- Through-hardened shot peened pins
- Special hook cotter.
- Coated T-pin.

TABLE 100. COIL TUBE CHAIN KITS AVAILABLE

Manufacturer	Coiled Tube Unit Model	Chain Size
National Oilwell	RT10	120-3
National Oilwell	RT20	120-3
National Oilwell	RT30	120-3
National Oilwell	RT3238	120-3
National Oilwell	RT25	120-3
National Oilwell	RT60	160-4
National Oilwell	RT100	160-4
Hydra Rig	HR560/660	180-4
Hydra Rig	HR580/680	200-4
Hydra Rig	HR440	180-3
Hydra Rig	HR480	200-3
Hydra Rig	HR5100	180-6
Hydra Rig	HR635	140-5

We suggest that you change out the sprockets each time you replace the roller chain.

TABLE 101. COIL TUBE CHAIN ASSEMBLIES AVAILABLE

Manufacturer	Coiled Tube Unit Model	Chain Size	Strand	Number of Strands Required
Stewart & Stevenson	Short unit	160-1 w/D3	14 pitch	8
Stewart & Stevenson	Long unit	160-1 w/D3	14 pitch	10
Stewart & Stevenson	Short unit	160H-1 w/D3	14 pitch	8
Stewart & Stevenson	Long unit	160H-1 w/D3	14 pitch	10

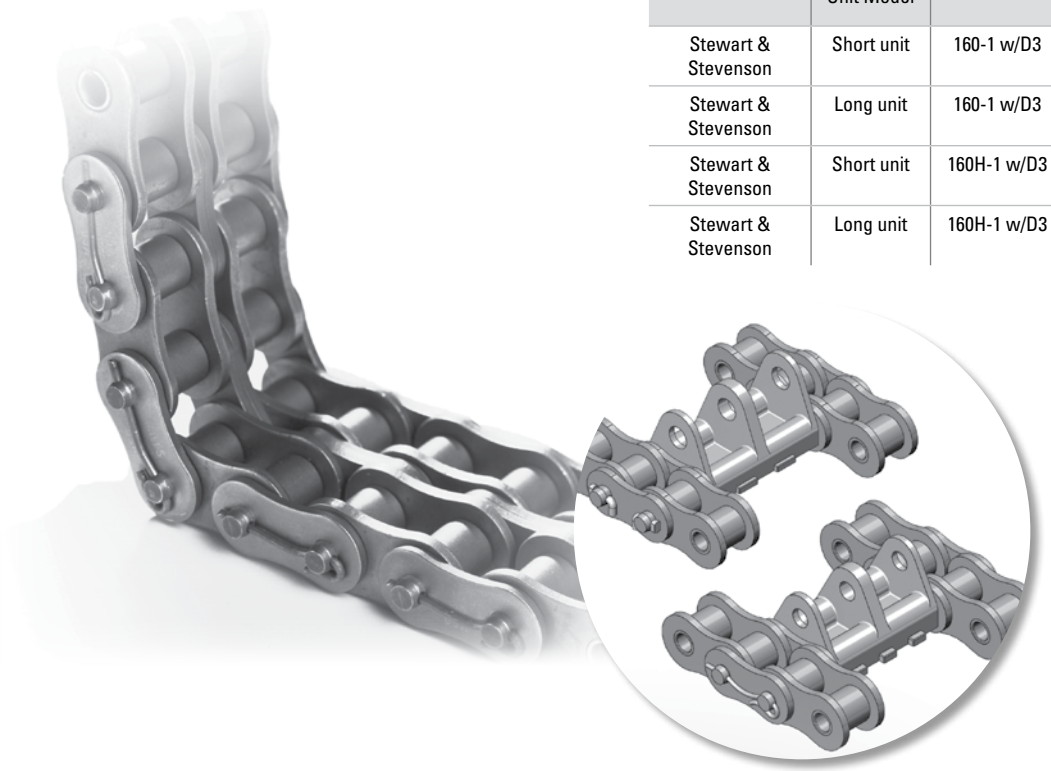

COIL TUBING WORKSHEET

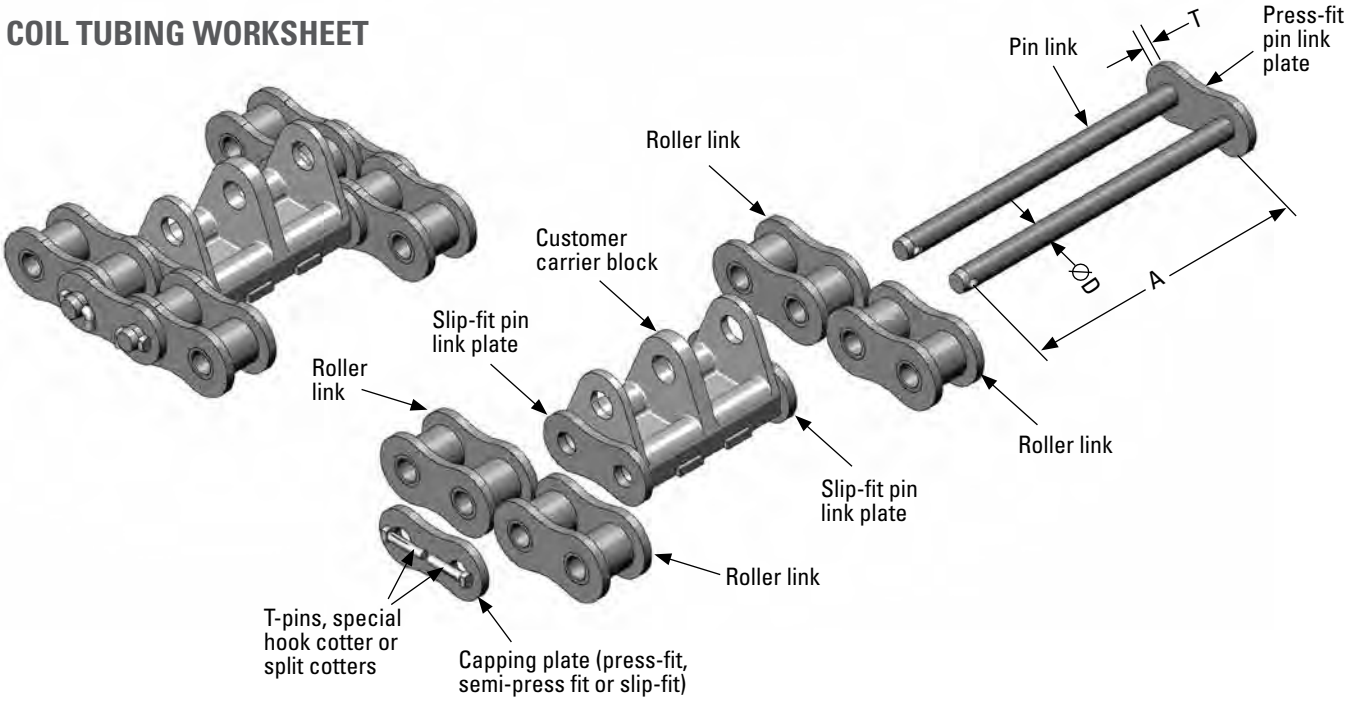

COMPANY _____ CONTACT _____

ADDRESS _____ CITY _____ STATE _____ ZIP _____

TELEPHONE _____ FAX _____

NOTES _____

_____

Use this form to identify the chain and attachments you need. If you have any questions, please contact Drives engineering at 800-435-0782.

Description	No.	A	D	T
		in.	in.	in.
ANSI Chain Number				
Pin				
Sidebar				

Note:

1. Semi press-fit plates are available on chain sizes 160, 180 and 200.
2. Hook cotters will be supplied on chain sizes 120-180.
3. T-pins will be supplied on chain sizes 200 and 240.

Kit Components	Quantity
Partial Pin Links	
Roller Links	
Middle Slip-Fit Plates	

Capping Plates	Quantity
Full Press-Fit	
Semi Press-Fit	
Slip-Fit	

Kit Components	Quantity
Hook Cotters	
T-Pins	
Split Cotters	

ADDITIONAL INFORMATION _____

_____

EXTENDED LIFE CHP® SERIES CHAIN

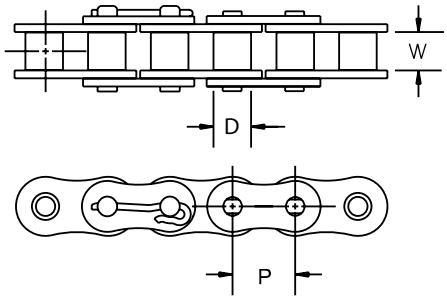

Fig. 46. Extended Life CHP® series chain.

- Directly interchangeable with standard ANSI chain.
- Outstanding wear and shock-load performance, even at elevated temperatures.
- No reduction in working loads or operating speeds.
- Exceptional pin wear resistance reduces chain elongation and can increase wear life up to three times more than conventional premium chains (fig. 37).
- Full range of ANSI standard attachments available.
- Extended Life CHP offsets available on a made-to-order basis. Two pitch riveted offsets are required.
- Cotter-type connecting links standard for Extended Life CHP® chain.
  - 40 through 60 pitch dual cotter key.
  - 80 through 180 pitch hardened hook cotter.
  - 200 through 240 pitch coated T-pin.
- Available in single- and double-strand sizes – #40 to #240.
- Riveted or cottered pins available depending on size.
- Corrosion resistant finishes available upon request for side bars, bushings and rollers.
- We suggest operating roller chain with periodic lubrication and maintenance. Various lubricants are available, including food grade and no-stain, depending on application.
- **Extended Life CHP also can be applied to carbon steel heavy series chain and other specialty chains, silver shield, stainless steel and engineered class chain. Please consult with your Drives representative.**
- Chain is available with:
  - Hot dip lubricant for optimal chain wear life.
  - Rust inhibitor for those customers who do not require hot dip lubricant.

TABLE 102. EXTENDED LIFE CHP® SERIES CHAIN SPECIFICATIONS

Chain No.	Pitch P	Width Between L.P. W	Roller Diameter D	Average Weight
	in. mm	**in.** mm	**in.** mm	**lbs/ft** kg/m
40	**0.500** 12.700	**0.313** 7.950	**0.313** 7.950	**0.42** 0.63
50	**0.625** 15.875	**0.376** 9.550	**0.400** 10.160	**0.71** 1.06
60	**0.750** 19.050	**0.500** 12.700	**0.469** 11.913	**1.07** 1.59
80	**1.000** 25.400	**0.627** 15.926	**0.625** 15.875	**1.87** 2.78
100	**1.250** 31.750	**0.755** 19.177	**0.750** 19.050	**2.80** 4.17
120	**1.500** 38.100	**1.000** 25.400	**0.875** 22.225	**4.14** 6.15
140	**1.750** 44.450	**1.000** 25.400	**1.000** 25.400	**5.14** 7.64
160	**2.000** 50.800	**1.250** 31.750	**1.126** 28.600	**6.60** 9.83
180	**2.250** 57.150	**1.400** 35.560	**1.406** 35.712	**9.10** 13.54
200	**2.500** 63.500	**1.490** 37.846	**1.562** 39.675	**10.90** 16.22
240	**3.000** 76.200	**1.864** 47.346	**1.875** 47.625	**16.40** 24.41
C2040	**1.000** 25.400	**0.312** 7.925	**0.312** 7.925	**0.34** 0.51
C2050	**1.250** 31.750	**0.376** 9.550	**0.400** 10.160	**0.58** 0.86
C2060H	**1.500** 38.100	**0.500** 12.700	**0.470** 11.938	**1.01** 1.50
C2080H	**2.000** 50.800	**0.625** 15.875	**0.625** 15.875	**1.20** 1.79

NOTE: Product specifications are subject to change without notice.
NOTE: Contact your Drives representative to obtain certified prints for design and construction.

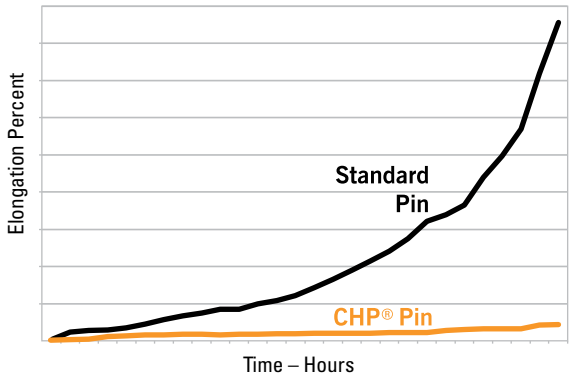

Fig. 47. Elongation vs. time.

CORROSION RESISTANT CHAINS

If your power-transmission or conveyor-chain application requires resistance to moisture, mild or aggressive corrosive agents, or extreme temperatures, look to us for the corrosion resistant chain products that best fit your needs. The chain you receive will help provide the dependability, reliability and productivity that makes us a leader in the production of power transmission and conveyor chains.







NICKEL-PLATED CHAIN

Nickel-plated chain is designed to resist incidental contact or exposure to water or water-based washdown operations. We apply an electroless nickel plating to the component parts prior to assembly to provide initial coverage of all exposed carbon material. Special attention is placed on the after-plating processes to help remove the possibility of hydrogen embrittlement – a common occurrence in lesser-quality chain.

SILVER SHIELD CR® CHAIN

Silver Shield CR® chain is available for applications that may be subjected to mildly caustic or acidic environments. Silver Shield CR® chain consist of our standard carbon steel components, specially coated with a zinc-aluminum compound. This compound, combined with a polymer-based resin, tightly adheres to the components during a high-temperature baking process. This combination-quality carbon steel components and environmental-resistant coating – provides one of the best alternatives to stainless in applications where stainless has historically been the only option.

600 AS SERIES STAINLESS STEEL CHAIN

The primary use of 600 AS series stainless steel chain is in corrosive and/or high-temperature environments, which shorten the life of a standard carbon steel chain. The hardened round parts provide up to a 50 percent higher working load and better wear life than 304 PS series stainless steel chain. This chain is designed for drive applications that normally have a high number of articulations.

304 PS SERIES STAINLESS STEEL CHAIN

The primary use of 304 PS series stainless steel chain is in corrosive and/or high-temperature environments, which shorten the life of standard carbon steel roller chain. The 304 PS series stainless steel chain provides excellent resistance to corrosion and high temperatures. 304 PS series stainless steel is generally considered non-magnetic.

316 NS SERIES STAINLESS STEEL CHAIN

The primary use of 316 NS series stainless steel chain is in highly corrosive and/or extreme-temperature environments which shorten the life of 304 PS series stainless steel chain.

⚠ CAUTION
Failure to follow these cautions may result in property damage.

Do not weld or torch-cut nickel plated or Silver Shield CR® coated chains. Consult your Drives representative for application information.

SELECTION INFORMATION

We offer stainless, Silver Shield CR and nickel-plated (NP) materials and coatings in commonly used sizes. They're available in standard packaged lengths or cut-to-length as required. Additionally, attachment link plates and extended pins are readily available for the most commonly requested ANSI power-transmission and extended pitch conveyor chains. Contact your Drives representative for the specific availability of the size and configuration your application requires.

The overall application requirements are important when selecting the correct type of roller or conveyor chain. The factors that most often define what chain combination should be used are resistance to the environment, wear life/strength and total operational cost.

The following are some characteristics to consider when selecting the chain that best suits your application.

ENVIRONMENT RESISTANCE

The chain selected should be capable of resisting the majority of the chemical and/or temperature requirements. If it's an ambient-temperature environment, then you need to only address the chemical presence. Our stainless, nickel-plated or Silver Shield CR® chains may be considered depending upon the severity of the chemical environment. If the environment is one that is elevated or sub-zero, stainless steel chain will most often provide the best overall operation.

WEAR LIFE/STRENGTH

If satisfactory chain life is defined as extended wear, then carbon steel based products are best suited. Our nickel-plated or Silver Shield CR® chains are constructed from carbon steel components that have the highest level of wear resistance and strength.

Chain strength is normally defined by its allowable working load. This value is one at which the chain can be expected to operate at or below for an indefinite period of time. Remember, allowable working loads are significantly less than ultimate tensile strength. Chains can have different allowable working loads but have similar ultimate tensile strengths.

COST

Cost normally depends on the material used to produce the chain. Stainless steel chain is considerably more costly to produce than carbon-based chain. However, if the environment requires a chain with exceptional corrosion resistance, a carbon steel based chain may provide the user with a lower-priced product, but may incur a higher cost of operation.

NICKEL-PLATED CHAIN

We produce nickel-plated chain to withstand the effects of exposure to moisture, outdoor conditions and incidental washdown applications. All components are identical to our carbon steel components with the addition of electroless nickel plating applied prior to assembly, which provides initial coverage of all exposed carbon material.

- Equal in strength and wear life to carbon steel chain.
- Electroless nickel-plated parts provide uniform and comprehensive protection.
- Resists rust from incidental exposure to water or water vapor.
- Nickel plating applied prior to assembly.

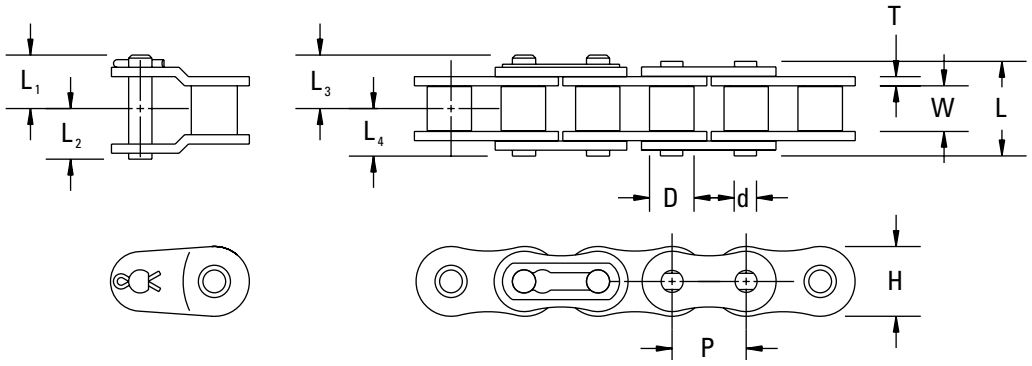

TABLE 103. NICKEL-PLATED ATTACHMENT CHAIN – ANSI WITH STANDARD ATTACHMENTS

Chain No.	Pitch	Main Roller Link Inside Width	Roller Dia.	Link Plate		Pin						Average Weight
	P	W	D	H	T	d	L	L_1	L_2	L_3	L_4	
	in. mm	**in.** mm	**in.** mm	**in.** mm	**in.** mm	**in.** mm	**in.** mm	**in.** mm	**in.** mm	**in.** mm	**in.** mm	**lbs./ft.** kg/m
40NP	**0.500** 12.70	**0.312** 7.92	**0.312** 7.92	**0.472** 11.99	**0.060** 1.52	**0.156** 3.96	**0.630** 16.00	**0.404** 10.26	**0.317** 8.05	**0.377** 9.58	**0.315** 8.00	**0.420** 0.625
50NP	**0.625** 15.88	**0.376** 9.55	**0.400** 10.16	**0.590** 14.99	**0.080** 2.03	**0.200** 5.08	**0.795** 20.19	**0.489** 12.42	**0.399** 10.13	**0.489** 12.42	**0.398** 10.11	**0.713** 1.061
60NP	**0.750** 19.05	**0.500** 12.70	**0.469** 11.91	**0.705** 17.91	**0.094** 2.39	**0.234** 5.94	**0.996** 25.30	**0.600** 15.24	**0.498** 12.65	**0.648** 16.46	**0.498** 12.65	**1.067** 1.588
80NP	**1.000** 25.40	**0.626** 15.90	**0.625** 15.88	**0.943** 23.95	**0.125** 3.18	**0.313** 7.95	**1.283** 32.59	**0.768** 19.51	**0.638** 16.21	**0.857** 21.77	**0.642** 16.31	**1.868** 2.780
100NP	**1.250** 31.75	**0.755** 19.18	**0.750** 19.05	**1.180** 29.97	**0.156** 3.96	**0.375** 9.53	**1.595** 40.51	**0.908** 23.06	**0.785** 19.94	**0.912** 23.16	**0.785** 19.94	**2.680** 3.988
120NP	**1.500** 38.10	**1.000** 25.40	**0.875** 22.23	**1.425** 36.20	**0.187** 4.75	**0.437** 11.10	**1.955** 49.66	**1.119** 28.42	**1.071** 27.20	**1.119** 28.42	**0.989** 25.12	**3.980** 5.923
160NP	**2.000** 50.80	**1.250** 31.75	**1.125** 28.58	**1.899** 48.23	**0.250** 6.35	**0.562** 14.27	**2.538** 64.47	**1.454** 36.93	**1.370** 34.80	**1.454** 36.93	**1.209** 30.71	**6.790** 10.105

NOTE: Dimensions are subject to change. Contact your Drives representative to obtain certified prints for design and construction.

SILVER SHIELD CR® ROLLER CHAIN

Many industry applications require a roller chain option that provides the strength of carbon steel combined with some degree of corrosion resistance. For this reason, we engineered Silver Shield CR. Silver Shield CR is constructed using our standard high-quality carbon components that have been specially coated using a zinc-aluminum compound. After coating, a protective polymer resin is applied and baked on to provide resistance to abrasion and flaking. Silver Shield CR is specifically designed to resist mild acidic or caustic environments.

- Equal in strength and wear resistance to carbon steel chain.
- Protective coating is applied to all parts for uniform and comprehensive protection.
- Silver Shield CR coating developed specifically for corrosion resistance in caustic or acidic environments.

⚠ WARNING
Failure to observe the following warnings could create a risk of death or serious injury.

Do not weld to Silver Shield CR® chain as it will release toxic fumes.

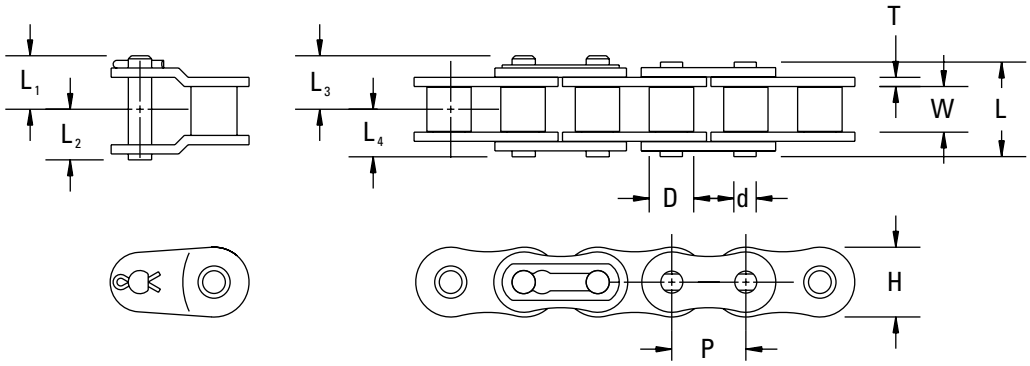

TABLE 104. SILVER SHIELD CR® CHAIN

Chain No.	Pitch	Main Roller Link Inside Width	Roller Dia.	Link Plate		Pin						Average Weight
	P	W	D	H	T	d	L	L_1	L_2	L_3	L_4	
	in. mm	**in.** mm	**in.** mm	**in.** mm	**in.** mm	**in.** mm	**in.** mm	**in.** mm	**in.** mm	**in.** mm	**in.** mm	**lbs./ft.** kg/m
40CR	**0.500** 12.70	**0.312** 7.92	**0.312** 7.92	**0.472** 11.99	**0.060** 1.52	**0.156** 3.96	**0.630** 16.00	**0.404** 10.26	**0.317** 8.05	**0.377** 9.58	**0.315** 8.00	**0.420** 0.625
50CR	**0.625** 15.88	**0.376** 9.55	**0.400** 10.16	**0.590** 14.99	**0.080** 2.03	**0.200** 5.08	**0.795** 20.19	**0.489** 12.42	**0.399** 10.13	**0.489** 12.42	**0.398** 10.11	**0.713** 1.061
60CR	**0.750** 19.05	**0.500** 12.70	**0.469** 11.91	**0.705** 17.91	**0.094** 2.39	**0.234** 5.94	**0.996** 25.30	**0.600** 15.24	**0.498** 12.65	**0.648** 16.46	**0.498** 12.65	**1.067** 1.588
80CR	**1.000** 25.40	**0.626** 15.90	**0.625** 15.88	**0.943** 23.95	**0.125** 3.18	**0.313** 7.95	**1.283** 32.59	**0.768** 19.51	**0.638** 16.21	**0.857** 21.77	**0.642** 16.31	**1.868** 2.780
100CR	**1.250** 31.75	**0.755** 19.18	**0.750** 19.05	**1.180** 29.97	**0.156** 3.96	**0.375** 9.53	**1.595** 40.51	**0.908** 23.06	**0.785** 19.94	**0.912** 23.16	**0.785** 19.94	**2.680** 3.988
120CR	**1.500** 38.10	**1.000** 25.40	**0.875** 22.23	**1.425** 36.20	**0.187** 4.75	**0.437** 11.10	**1.955** 49.66	**1.119** 28.42	**1.071** 27.20	**1.119** 28.42	**0.989** 25.12	**3.980** 5.923
140CR	**1.750** 44.45	**1.000** 25.40	**1.000** 25.40	**1.663** 42.24	**0.220** 5.59	**0.500** 12.70	**2.136** 54.25	**1.253** 31.83	**1.150** 29.21	**1.253** 31.83	**1.068** 27.13	**5.030** 7.485
160CR	**2.000** 50.80	**1.250** 31.75	**1.125** 28.58	**1.889** 48.23	**0.250** 6.35	**0.562** 14.27	**2.538** 64.47	**1.454** 36.93	**1.370** 34.80	**1.454** 36.93	**1.209** 30.71	**6.790** 10.105

NOTE: Dimensions are subject to change. Contact your Drives representative to obtain certified prints for design and construction.
NOTE: Solutions used in washdown applications may not be compatible with Silver Shield CR® coating. Contact your Drives representative for more information.

STAINLESS STEEL ANSI CHAIN SIZES

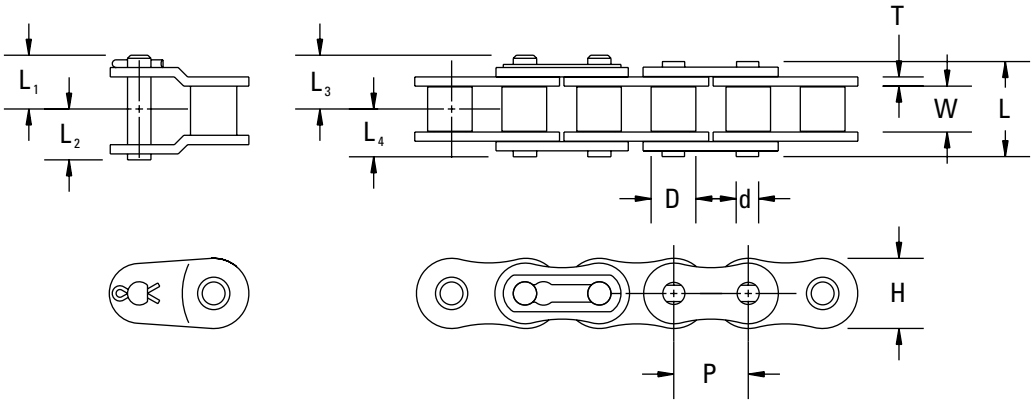

TABLE 105. STAINLESS STEEL

Chain No.	Pitch	Main Roller Link Inside Width	Roller Dia.	Link Plate		Pin						Max. Allowable Load		Average Weight
	P	W	D	H	T	d	L	L_1	L_2	L_3	L_4	PS(304SS) NS(316SS)	AS(600SS)	
	in. mm	**in.** mm	**in.** mm	**in.** mm	**in.** mm	**in.** mm	**in.** mm	**in.** mm	**in.** mm	**in.** mm	**in.** mm	**lbs.** k/N		**lbs./ft.** kg/m
40 AS, PS or NS	**0.500** 12.70	**0.312** 7.92	**0.312** 7.92	**0.472** 11.99	**0.060** 1.52	**0.156** 3.96	**0.630** 16.00	**0.404** 10.26	**0.317** 8.05	**0.377** 9.58	**0.315** 8.00	**100** 0.44	**155** 230.67	**0.420** 0.625
50 AS, PS or NS	**0.625** 15.88	**0.376** 9.55	**0.400** 10.16	**0.590** 14.99	**0.080** 2.03	**0.200** 5.08	**0.795** 20.19	**0.489** 12.42	**0.399** 10.13	**0.489** 12.42	**0.398** 10.11	**165** 0.73	**230** 342.28	**0.713** 1.061
60 AS, PS or NS	**0.750** 19.05	**0.500** 12.70	**0.469** 11.91	**0.705** 17.91	**0.094** 2.39	**0.234** 5.94	**0.996** 25.30	**0.600** 15.24	**0.498** 12.65	**0.648** 16.46	**0.498** 12.65	**231** 1.03	**350** 520.86	**1.067** 1.588
80 AS, PS or NS	**1.000** 25.40	**0.626** 15.90	**0.625** 15.88	**0.943** 23.95	**0.125** 3.18	**0.313** 7.95	**1.283** 32.59	**0.768** 19.51	**0.638** 16.21	**0.857** 21.77	**0.642** 16.31	**396** 1.76	**600** 892.90	**1.868** 2.780
100 AS, PS or NS	**1.250** 31.75	**0.755** 19.18	**0.750** 19.05	**1.180** 29.97	**0.156** 3.96	**0.375** 9.53	**1.595** 40.51	**0.908** 23.06	**0.785** 19.94	**0.912** 23.16	**0.785** 19.94	**568** 2.53	**850** 1264.94	**2.680** 3.988
120 AS, PS or NS	**1.500** 38.10	**1.000** 25.40	**0.875** 22.23	**1.425** 36.20	**0.187** 4.75	**0.437** 11.10	**1.955** 49.66	**1.119** 28.42	**1.071** 27.20	**1.119** 28.42	**0.989** 25.12	**850** 3.78	**1,278** 1901.87	**3.980** 5.923
140 AS, PS or NS	**1.750** 44.45	**1.000** 25.40	**1.000** 25.40	**1.663** 42.24	**0.220** 5.59	**0.500** 12.70	**2.136** 54.25	**1.253** 31.83	**1.150** 29.21	**1.263** 32.08	**1.068** 27.13	**1,025** 4.56	**1,535** 2284.33	**5.030** 7.485
160 AS, PS or NS	**2.000** 44.45	**1.250** 25.40	**1.125** 25.40	**1.899** 42.24	**0.250** 5.59	**0.562** 12.70	**2.538** 54.25	**1.454** 31.83	**1.370** 29.21	**1.454** 32.08	**1.209** 27.13	**1,400** 4.56	**2,108** 2284.33	**6.790** 7.485

NOTE: Dimensions are subject to change. Contact your Drives representative to obtain certified prints for design and construction.

TABLE 106. STAINLESS MATERIAL

Abbrev.	Material	Link Plate	Pin	Bushing	Roller
PS	304 Series	AISI 304	AISI 304	AISI 304	AISI 304
NS	316 Series	AISI 316	AISI 316	AISI 316	AISI 316
AS	600 Series	AISI 300	600 PH[1]	600 PH[1]	600 PH[1]

[1]Contact your Drives representative for temperatures below -20° F (29° C) or above 500° F (260° C).

SPECIALTY CHAINS

EXTRA CLEARANCE EXC® CONVEYOR CHAIN

Extra Clearance EXC® conveyor chain is produced with extra clearance to compensate for steel expansion at temperatures up to 500° F and to permit free joint-action at oven temperatures. Extra Clearance chain may be used with ANSI chain sprockets. Consult your Drives representative for application and available sizes.

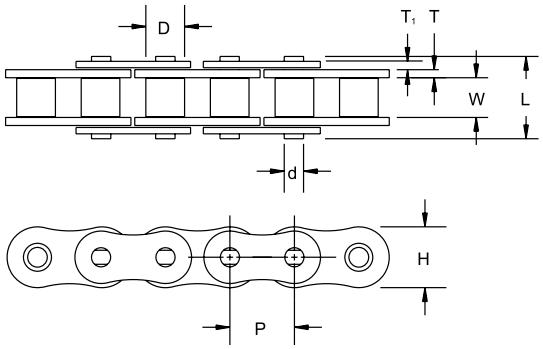

TABLE 107. EXTRA CLEARANCE EXC® CONVEYOR CHAIN

Chain No.	Pitch P	Width Between L.P. W	Roller Dia. D	Link Plate			Pin		Average Tensile Strength (Through-Hardened Pin)	Average Weight	Riveted	Cottered
				H	T	T_1	d	L				
	in. mm	**in.** mm	**in.** mm	**in.** mm	**in.** mm	**in.** mm	**in.** mm	**in.** mm	**lbs./ft.** kg/m	**lbs./ft.** kg/m		
80 EXC	**1.000** 25.40	**0.625** 15.88	**0.625** 15.88	**0.949** 24.10	**0.156** 3.96	**0.120** 3.05	**0.312** 7.92	**1.413** 35.89	**21,500** 31995.525	**2.200** 0.01	STD STD	MTO MTO

NOTE: Dimensions are subject to change. Contact your Drives representative to obtain certified prints for design and construction.

E-SERIES CHAIN

- Available in riveted style.
- Cut-to-length chain available.
- E-series suggested for heavy-duty transfer systems.

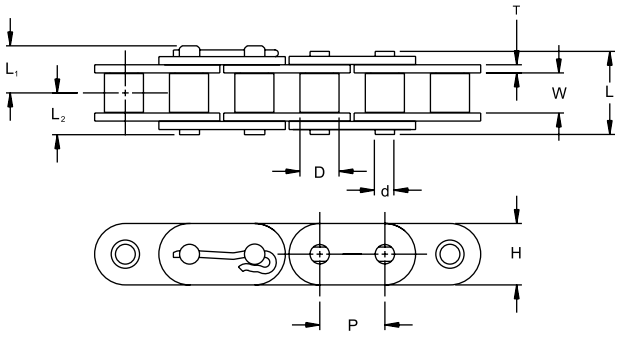

TABLE 108. E-SERIES CHAIN

Chain No.	Pitch P	Width Between L.P. W	Roller Dia. D	Link Plate		Pin Dia. d	Pin			Average Weight
				H	T		L	L_1	L_2	
	in. mm	**in.** mm	**in.** mm	**in.** mm	**in.** mm.	**in.** mm	**in.** mm	**in.** mm	**in.** mm	**lbs./ft.** kg/m
C60E	**0.750** 19.05	**0.500** 12.70	**0.469** 11.91	**0.705** 17.91	**0.094** 2.39	**0.234** 5.94	**0.996** 25.30	**0.648** 16.46	**0.498** 12.65	**1.173** 1.746
C80E	**1.000** 25.40	**0.627** 15.93	**0.625** 15.88	**0.943** 23.95	**0.125** 3.18	**0.312** 7.92	**1.283** 32.59	**0.857** 21.77	**0.642** 16.31	**2.054** 3.057
C100E	**1.250** 31.75	**0.755** 19.18	**0.750** 19.05	**1.180** 29.97	**0.156** 3.96	**0.375** 9.53	**1.595** 40.51	**0.912** 23.16	**0.785** 19.94	**3.081** 4.585
C120E	**1.500** 38.10	**1.000** 25.40	**0.875** 22.23	**1.425** 36.20	**0.187** 4.75	**0.437** 11.10	**1.955** 49.66	**1.119** 28.42	**0.989** 25.12	**4.588** 6.828
C140E	**1.750** 44.45	**1.000** 25.40	**1.000** 25.40	**1.663** 42.24	**0.220** 5.59	**0.500** 12.70	**2.136** 54.25	**1.253** 31.83	**1.068** 27.13	**5.878** 8.747
C160E	**2.000** 50.80	**1.250** 31.75	**1.126** 28.60	**1.899** 48.23	**0.252** 6.40	**0.563** 14.30	**2.538** 64.47	**1.454** 36.93	**1.269** 32.23	**7.787** 11.588

NOTE: Dimensions are subject to change. Contact your Drives representative to obtain certified prints for design and construction.

COUPLING CHAIN

We manufacture coupling chain in accordance with ANSI/ASME B29.1. These duplex chains utilize a standard duplex connecting link for easy installation.

TABLE 109. COUPLING CHAIN

Chain No.	Pitch **in.** mm	Length Pitches **in.** mm	Weight **lb.** kg
40	**0.500** 12.700	**12** 12	**0.41** 0.19
40	**0.500** 12.700	**16** 16	**0.55** 0.25
50	**0.625** 15.875	**16** 16	**1.17** 0.53
50	**0.625** 15.875	**18** 18	**1.32** 0.60
60	**0.750** 19.050	**18** 18	**2.33** 1.06
60	**0.750** 19.050	**20** 20	**2.59** 1.17
60	**0.750** 19.050	**22** 22	**2.84** 1.29
80	**1.000** 25.400	**18** 18	**5.60** 2.54
80	**1.000** 25.400	**20** 20	**6.23** 2.83
100	**1.250** 31.750	**18** 18	**10.51** 4.77
100	**1.250** 31.750	**20** 20	**11.67** 5.29
120	**1.500** 38.100	**18** 18	**18.61** 8.44
120	**1.500** 38.100	**22** 22	**22.74** 10.31

LEAF CHAIN

Drives leaf chain is designed and manufactured in accordance to ANSI standard B29.8.

- Alloy steel pins are through-hardened for ductility at low temperatures while maintaining hardness for wear life.
- Through-hardened plates with ballized holes are used for improved fatigue strength.
- When ordering, specify your requirements. Strands with an odd number of pitches, inner links at both ends will be provided as standard.

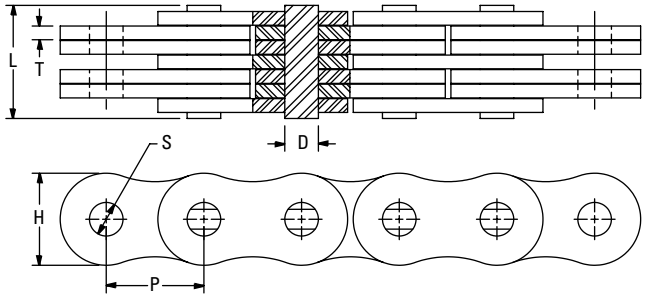

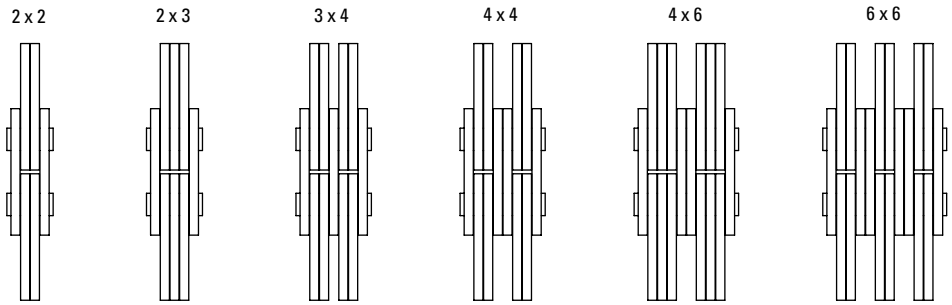

TABLE 110. LEAF CHAIN

Chain Sizes	Pitch P	Lacing	Min. Tensile Strength	D	L	T	H	Hole Dia. (Min.) S	Approx. Weight
	in. mm		**lbs.** kN	**in.** mm	**in.** mm	**in.** mm	**in.** mm	**in.** mm	**lbs./ft.** kg/m
BL1222	**1.500** 38.100	**2X2**	**41,800** 186	**0.500** 12.700	**1.11** 28.19	**0.220** 5.588	**1.425** 36.195	**0.502** 12.741	**3.25** 4.84
BL1223	**1.500** 38.100	**2X3**	**41,800** 186	**0.500** 12.700	**1.34** 34.04	**0.220** 5.588	**1.425** 36.195	**0.502** 12.741	**4.39** 6.53
BL1234	**1.500** 38.100	**3X4**	**67,200** 299	**0.500** 12.700	**1.78** 45.21	**0.220** 5.588	**1.425** 36.195	**0.502** 12.741	**6.11** 9.09
BL1244	**1.500** 38.100	**4X4**	**83,600** 372	**0.500** 12.700	**2.00** 50.80	**0.220** 5.588	**1.425** 36.195	**0.502** 12.741	**6.98** 10.39
BL1246	**1.500** 38.100	**4X6**	**83,600** 372	**0.500** 12.700	**2.46** 62.48	**0.220** 5.588	**1.425** 36.195	**0.502** 12.741	**8.07** 12.01
BL1266	**1.500** 38.100	**6X6**	**125,600** 559	**0.500** 12.700	**2.92** 74.17	**0.220** 5.588	**1.425** 36.195	**0.502** 12.741	**9.80** 14.58
BL1422	**1.750** 44.450	**2X2**	**52,900** 235	**0.562** 14.275	**1.26** 32.00	**0.252** 6.401	**1.661** 42.189	**0.564** 14.321	**4.91** 7.31
BL1423	**1.750** 44.450	**2X3**	**52,900** 235	**0.562** 14.275	**1.52** 38.61	**0.252** 6.401	**1.661** 42.189	**0.564** 14.321	**6.09** 9.06
BL1434	**1.750** 44.450	**3X4**	**87,000** 387	**0.562** 14.275	**2.04** 51.82	**0.252** 6.401	**1.661** 42.189	**0.564** 14.321	**7.61** 11.33
BL1444	**1.750** 44.450	**4X4**	**105,800** 471	**0.562** 14.275	**2.30** 58.42	**0.252** 6.401	**1.661** 42.189	**0.564** 14.321	**8.71** 12.96
BL1446	**1.750** 44.450	**4X6**	**105,800** 471	**0.562** 14.275	**2.80** 71.12	**0.252** 6.401	**1.661** 42.189	**0.564** 14.321	**12.10** 18.01
BL1466	**1.750** 44.450	**6X6**	**158,700** 706	**0.562** 14.275	**3.32** 84.33	**0.252** 6.401	**1.661** 42.189	**0.564** 14.321	**15.13** 22.52

Continued on next page.

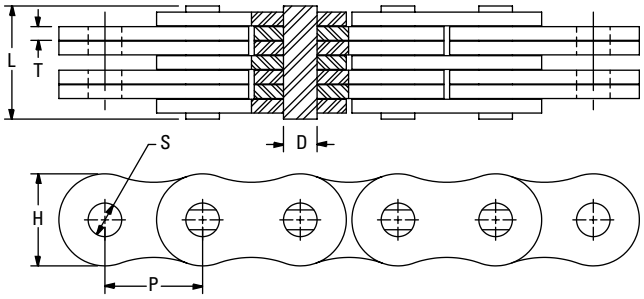

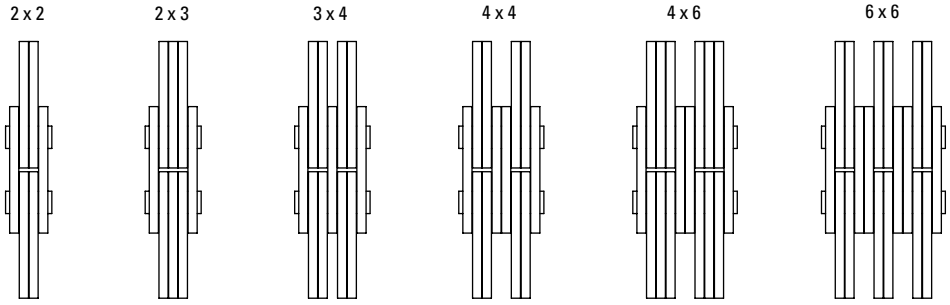

Continued from previous page.

Chain Sizes	Pitch P	Lacing	Min. Tensile Strength	D	L	T	H	Hole Dia. (Min.) S	Approx. Weight
	in. mm		**lbs.** kN	**in.** mm	**in.** mm	**in.** mm	**in.** mm	**in.** mm	**lbs./ft.** kg/m
BL1622	**2.000** 50.800	**2X2**	**79,300** 353	**0.687** 17.450	**1.42** 36.07	**0.281** 7.137	**1.898** 48.209	**0.689** 17.490	**6.61** 9.84
BL1623	**2.000** 50.800	**2X3**	**79,300** 353	**0.687** 17.450	**1.72** 43.69	**0.281** 7.137	**1.898** 48.209	**0.689** 17.490	**8.17** 12.16
BL1634	**2.000** 50.800	**3X4**	**124,500** 554	**0.687** 17.450	**2.30** 58.39	**0.281** 7.137	**1.898** 48.209	**0.689** 17.490	**11.39** 16.95
BL1644	**2.000** 50.800	**4X4**	**158,600** 705	**0.687** 17.450	**2.61** 66.29	**0.281** 7.137	**1.898** 48.209	**0.689** 17.490	**12.75** 18.97
BL1646	**2.000** 50.800	**4X6**	**158,600** 705	**0.687** 17.450	**3.21** 81.53	**0.281** 7.137	**1.898** 48.209	**0.689** 17.490	**16.19** 24.09
BL1666	**2.000** 50.800	**6X6**	**238,300** 1,060	**0.687** 17.450	**3.81** 96.77	**0.281** 7.137	**1.898** 48.209	**0.689** 17.490	**19.31** 28.74
BL1688	**2.000** 50.800	**8X8**	**263,100** 1,157	**0.687** 17.450	**4.75** 120.65	**0.281** 7.137	**1.898** 48.209	**0.689** 17.490	**23.18** 35.00
BL2022	**2.500** 63.500	**2X2**	**119,000** 529	**0.937** 23.800	**1.86** 47.24	**0.375** 9.525	**2.312** 58.725	**0.940** 23.876	**10.62** 15.80
BL2023	**2.500** 63.500	**2X3**	**119,000** 529	**0.937** 23.800	**2.25** 57.15	**0.375** 9.525	**2.312** 58.725	**0.940** 23.876	**13.31** 19.81
BL2034	**2.500** 63.500	**3X4**	**178,800** 795	**0.937** 23.800	**3.03** 76.96	**0.375** 9.525	**2.312** 58.725	**0.940** 23.876	**18.62** 27.71
BL2044	**2.500** 63.500	**4X4**	**238,500** 1,061	**0.937** 23.800	**3.43** 87.12	**0.375** 9.525	**2.312** 58.725	**0.940** 23.876	**21.24** 31.61
BL2046	**2.500** 63.500	**4X6**	**238,500** 1,061	**0.937** 23.800	**4.21** 106.93	**0.375** 9.525	**2.312** 58.725	**0.940** 23.876	**26.55** 39.51
BL2066	**2.500** 63.500	**6X6**	**357,800** 1,591	**0.937** 23.800	**4.99** 126.75	**0.375** 9.525	**2.312** 58.725	**0.940** 23.876	**31.85** 47.40

50WR WRENCH CHAIN

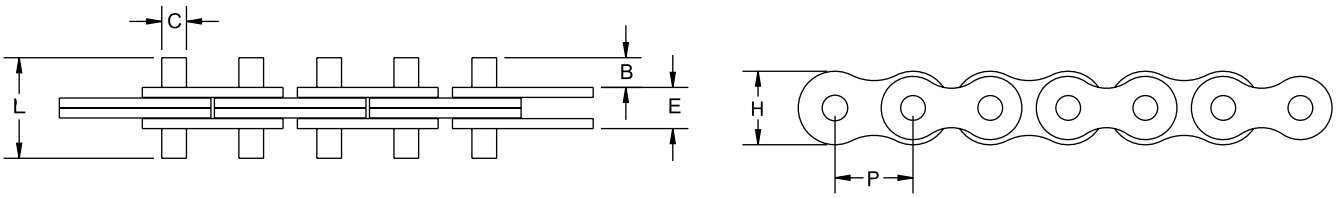

TABLE 111. 50WR WRENCH CHAIN

Chain No.	Pitch P	Lacing	Pin Dia. C	Pin Over All Length L	Pin Projection B	Link Plate H	Width Over Link Plate E	Average Tensile Strength Case-Hardened Pin	Average Weight
	in. mm		**in.** mm	**in.** mm	**in.** mm	**in.** mm	**in.** mm	**lbs.** kN	**lbs./ft.** kg/m
50WR	**0.625** 15.88	2X2	**0.2** 5.08	**0.806** 20.47	**0.238** 6.05	**0.59** 14.99	**0.33** 8.38	**6,000** 26.69	**0.50** 0.744

D16B SPECIAL CHAIN

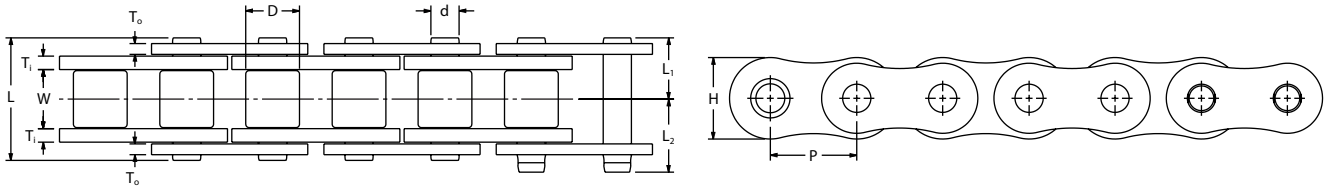

TABLE 112. D16B SPECIAL CHAIN

Chain No.	Pitch P	Width Between Link Plate W	Roller Dia. D	Link Plate H	Link Plate T_1	Link Plate T_0	Pin Dimensions d	Pin Dimensions L	Pin Dimensions L_1	Pin Dimensions L_2	Working Load	Average Weight
	in. mm	**in.** mm	**in.** mm	**in.** mm	**in.** mm	**in.** mm	**in.** mm	**in.** mm	**in.** mm	**in.** mm	**lbs.** k/N	**lbs./ft.** kg/m
D16B SS	**1.000** 25.40	**0.670** 17.02	**0.625** 15.88	**0.945** 24.00	**0.156** 3.96	**0.125** 3.18	**0.326** 8.28	**1.400** 35.56	**0.700** 17.78	**0.830** 21.08	**455** 2.02	**2.00** 2.98



ATTACHMENT ROLLER CHAINS

We deliver what customers need, when they need it, supplying attachment roller chains to get equipment running again.

We offer attachment roller chains in carbon steel, Extended Life CHP® series chain, Silver Shield CR, Silver Shield CR with Extended Life CHP pins, and stainless steel.

Our Drives representatives are available to help you select the right chain for your equipment.

ATTACHMENT ROLLER CHAINS

TYPES OF ATTACHMENT ROLLER CHAINS

Drives attachment roller chains are available in carbon steel, Silver Shield CR® coating, Extended Life CHP®, Silver Shield CR® plus Extended Life CHP®, and stainless steel.

BA-1 Roller Link



BA-1 Pin Link



BK-1 Roller Link



BK-1 Pin Link



SA-1 Roller Link



SA-1 Pin Link



SK-1 Roller Link



SK-1 Pin Link



WBA-1 Roller Link



WBA-1 Pin Link



WBK-1 Roller Link



WBK-1 Pin Link



WBA-2 Roller Link



WBA-2 Pin Link



WBK-2 Roller Link



WBK-2 Pin Link



WSA-1 Roller Link



WSA-1 Pin Link



WSK-1 Roller Link



WSK-1 Pin Link



WSA-2 Roller Link



WSA-2 Pin Link



WSK-2 Roller Link



WSK-2 Pin Link



D-1 Pin Link



D-3 Pin Link



Fig. 48. Carbon steel attachment selection shown here.

CHAIN SIZES AVAILABLE WITH STANDARD ATTACHMENTS

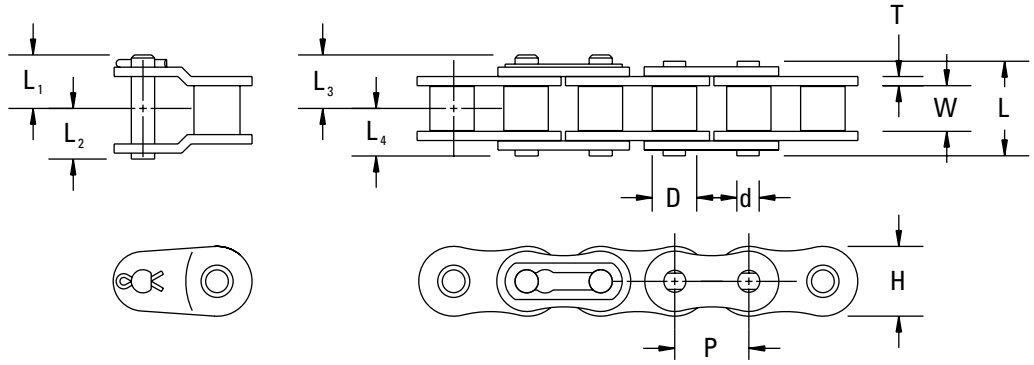

TABLE 113. DIMENSIONS FOR BASE CHAIN

Chain No.	Pitch	Main Roller Link Inside Width	Roller Dia.	Link Plate		Pin						Max. Allowable Load		Average Weight
	P	W	D	H	T	d	L	L_1	L_2	L_3	L_4	Carbon Steel	AS (600SS)	
	in. mm	**in.** mm	**in.** mm	**in.** mm	**in.** mm	**in.** mm	**in.** mm	**in.** mm	**in.** mm	**in.** mm	**in.** mm	**lbs.** kN	**lbs.** kN	**lbs./ft.** kg/m
40 40AS	**0.500** 12.70	**0.312** 7.92	**0.312** 7.92	**0.472** 11.99	**0.060** 1.52	**0.156** 3.96	**0.630** 16.00	**0.404** 10.26	**0.317** 8.05	**0.377** 9.58	**0.315** 8.00	**615.00** 2.74	**155.00** 0.69	**0.420** 0.625
50 50AS	**0.625** 15.88	**0.376** 9.55	**0.400** 10.16	**0.590** 14.99	**0.080** 2.03	**0.200** 5.08	**0.795** 20.19	**0.489** 12.42	**0.399** 10.13	**0.489** 12.42	**0.398** 10.11	**1010.00** 4.49	**230.00** 1.02	**0.713** 1.061
60 60AS	**0.750** 19.05	**0.500** 12.70	**0.469** 11.91	**0.705** 17.91	**0.094** 2.39	**0.234** 5.94	**0.996** 25.30	**0.600** 15.24	**0.498** 12.65	**0.648** 16.46	**0.498** 12.65	**1410.00** 6.27	**350.00** 1.56	**1.067** 1.588
80 80AS	**1.000** 25.40	**0.626** 15.90	**0.625** 15.88	**0.943** 23.95	**0.125** 3.18	**0.313** 7.95	**1.283** 32.59	**0.768** 19.51	**0.638** 16.21	**0.857** 21.77	**0.642** 16.31	**2350.00** 10.45	**600.00** 2.67	**1.868** 2.780
100 100AS	**1.250** 31.75	**0.755** 19.18	**0.750** 19.05	**1.180** 29.97	**0.156** 3.96	**0.375** 9.53	**1.595** 40.51	**0.908** 23.06	**0.785** 19.94	**0.912** 23.16	**0.785** 19.94	**3800.00** 16.90	**850.00** 3.78	**2.680** 3.988
120 120AS	**1.500** 38.10	**1.000** 25.40	**0.875** 22.23	**1.425** 36.20	**0.187** 4.75	**0.437** 11.10	**1.955** 49.66	**1.119** 28.42	**1.071** 27.20	**1.119** 28.42	**0.989** 25.12	**5380.00** 23.93	**1278.00** 5.68	**3.980** 5.923
140 140AS	**1.750** 44.45	**1.000** 25.40	**1.000** 25.40	**1.663** 42.24	**0.220** 5.59	**0.500** 12.70	**2.136** 54.25	**1.253** 31.83	**1.150** 29.21	**1.253** 31.83	**1.068** 27.13	**7280.00** 32.38	**1535.00** 6.83	**5.030** 7.485
160 160AS	**2.000** 50.80	**1.250** 31.75	**1.125** 28.58	**1.899** 48.23	**0.250** 6.35	**0.562** 14.27	**2.538** 64.47	**1.454** 36.93	**1.370** 34.80	**1.454** 36.93	**1.209** 30.71	**9190.00** 40.88	**2100.00** 9.34	**6.790** 10.105

NOTE: Dimensions are subject to change. Contact your Drives representative to obtain certified prints for design and construction.
NOTE: 304SS (PS) or 316SS (NS) chains are available upon request.
NOTE: Refer to the Drives Chain Configurator at cad.timken.com/configurator.

STANDARD ROLLER CHAIN ATTACHMENTS – BA, SA, BK, SK

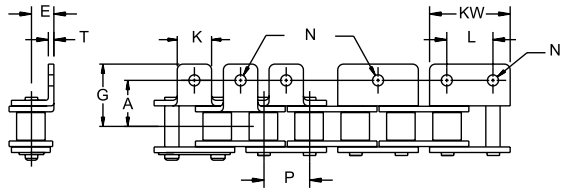

BA-1

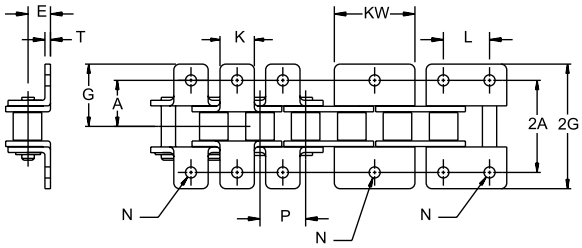

BK-1

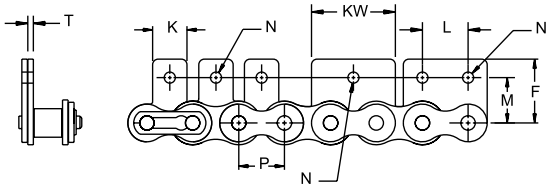

SA-1

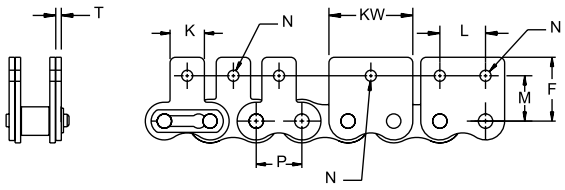

SK-1

TABLE 114. DIMENSIONS FOR STANDARD – BA, SA, BK, SK

Chain No.	BA, SA, BK, SK Type Attachment													Additional Weight Per Attachment	
	P	T	K	KW	L	N	A	E	G	2A	2G	M	F	BA-SA	BK-SK
	in. mm	**in.** mm	**in.** mm	**in.** mm	**in.** mm	**in.** mm	**in.** mm	**in.** mm	**in.** mm	**in.** mm	**in.** mm	**in.** mm	**in.** mm	**lbs.** kN	**lbs.** kN
40 40AS	**0.500** 12.70	**0.060** 1.52	**0.374** 9.50	**0.970** 24.64	**0.500** 12.70	**0.142** 3.61	**0.500** 12.70	**0.311** 7.90	**0.681** 17.30	**1.000** 25.40	**1.362** 34.59	**0.500** 12.70	**0.685** 17.40	**0.0044** 0.002	**0.0088** 0.004
50 50AS	**0.625** 15.88	**0.080** 2.03	**0.500** 12.70	**1.210** 30.73	**0.625** 15.88	**0.205** 5.21	**0.625** 15.88	**0.406** 10.31	**0.917** 23.29	**1.250** 31.75	**1.834** 46.58	**0.625** 15.88	**0.906** 23.01	**0.0066** 0.003	**0.0132** 0.006
60 60AS	**0.750** 19.05	**0.094** 2.39	**0.625** 15.88	**1.460** 37.08	**0.750** 19.05	**0.205** 5.21	**0.750** 19.05	**0.469** 11.91	**1.106** 28.09	**1.500** 38.10	**2.212** 56.18	**0.720** 18.29	**1.051** 26.70	**0.0154** 0.007	**0.0308** 0.014
80 80AS	**1.000** 25.40	**0.125** 3.18	**0.750** 19.05	**1.940** 49.28	**1.000** 25.40	**0.268** 6.81	**1.000** 25.40	**0.625** 15.88	**1.413** 35.89	**2.000** 50.80	**2.826** 71.78	**0.969** 24.61	**1.358** 34.49	**0.0287** 0.013	**0.0574** 0.026
100 100AS	**1.250** 31.75	**0.156** 3.96	**1.000** 25.40	– –	– –	**0.343** 8.71	**1.250** 31.75	**0.780** 19.81	**1.768** 44.91	**2.500** 63.50	**3.536** 89.81	**1.252** 31.80	**1.732** 43.99	**0.0572** 0.026	**0.1144** 0.052
120 120AS	**1.500** 38.10	**0.187** 4.75	**1.250** 31.75	– –	– –	**0.386** 9.80	**1.500** 38.10	**0.906** 23.01	**2.197** 55.80	**3.000** 76.20	**4.394** 111.61	**1.437** 36.50	**2.081** 52.86	**0.0968** 0.044	**0.1935** 0.088
140 140AS	**1.750** 44.45	**0.221** 5.61	**1.375** 34.93	– –	– –	**0.448** 11.38	**1.750** 44.45	**1.125** 28.58	**2.484** 63.09	**3.500** 88.90	**4.968** 126.19	**1.750** 44.45	**2.500** 63.50	**0.1562** 0.071	**0.3124** 0.142
160 160AS	**2.000** 50.80	**0.250** 6.35	**1.500** 38.10	– –	– –	**0.516** 13.11	**2.000** 50.80	**1.252** 31.80	**2.827** 71.81	**4.000** 101.60	**5.654** 143.61	**2.000** 50.80	**2.760** 70.10	**0.2134** 0.097	**0.4268** 0.194

NOTE: Dimensions are subject to change. Contact your Drives representative to obtain certified prints for design and construction.
NOTE: Refer to the Drives Chain Configurator at cad.timken.com/configurator.

STANDARD ROLLER CHAIN ATTACHMENTS – D-1, D-3

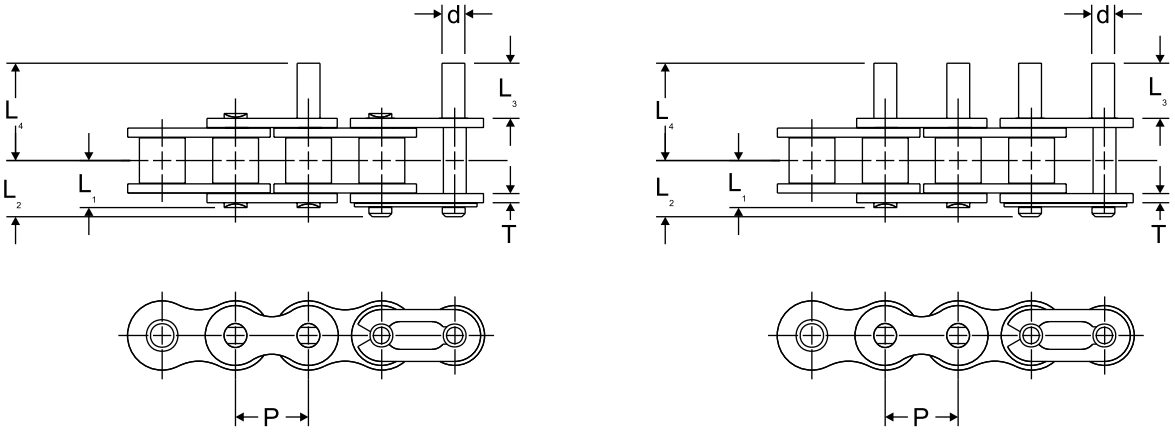

D-1 **D-3**

TABLE 115. CARBON STEEL – ANSI ROLLER CHAIN WITH ATTACHMENTS – D-1, D-3

Chain No.	P	T	d	L_1	L_2	L_3	L_4	Additional Weight Per Attachment	
								D-1	D-3
	in. mm	**in.** mm	**in.** mm	**in.** mm	**in.** mm	**in.** mm	**in.** mm	**lbs.** kN	**lbs.** kN
40 40AS	**0.500** 12.70	**0.060** 1.52	**0.156** 3.96	**0.317** 8.05	**0.377** 9.58	**0.374** 9.50	**0.661** 16.79	**0.002** 0.001	**0.004** 0.002
50 50AS	**0.625** 15.88	**0.080** 2.03	**0.200** 5.08	**0.399** 10.13	**0.489** 12.42	**0.469** 11.91	**0.827** 21.01	**0.004** 0.002	**0.008** 0.004
60 60AS	**0.750** 19.05	**0.094** 2.39	**0.234** 5.94	**0.498** 12.65	**0.648** 16.46	**0.563** 14.30	**1.018** 25.86	**0.006** 0.003	**0.012** 0.005
80 80AS	**1.000** 25.40	**0.125** 3.18	**0.313** 7.95	**0.638** 16.21	**0.857** 21.77	**0.752** 19.10	**1.335** 33.91	**0.020** 0.009	**0.040** 0.018
100 100AS	**1.250** 31.75	**0.156** 3.96	**0.325** 8.26	**0.785** 19.94	**0.912** 23.16	**0.937** 23.80	**1.698** 43.13	**0.027** 0.012	**0.054** 0.024
120 120AS	**1.500** 38.10	**0.187** 4.75	**0.437** 11.10	**0.989** 25.12	**1.119** 28.42	**1.126** 28.60	**2.024** 51.41	**0.044** 0.020	**0.088** 0.040
140 140AS	**1.750** 44.45	**0.220** 5.59	**0.500** 12.70	**1.068** 27.13	**1.253** 31.83	**1.311** 33.30	**2.264** 57.51	**0.066** 0.030	**0.132** 0.060
160 160AS	**2.000** 50.80	**0.250** 6.35	**0.562** 14.27	**1.263** 32.08	**1.454** 36.93	**1.500** 38.10	**2.654** 67.41	**0.099** 0.045	**0.198** 0.090

NOTE: Dimensions are subject to change. Contact your Drives representative to obtain certified prints for design and construction.
NOTE: Refer to the Drives Chain Configurator at cad.timken.com/configurator.

DOUBLE-PITCH CONVEYOR CHAIN SIZES AVAILABLE WITH STANDARD ATTACHMENTS

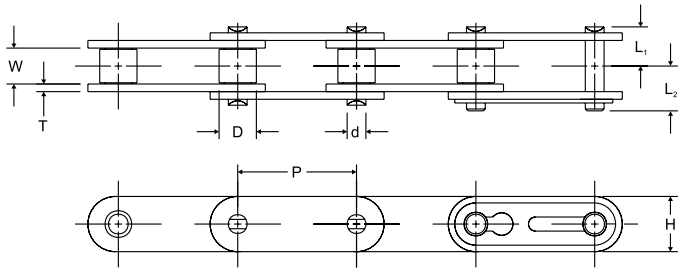

Small roller

TABLE 116. DIMENSIONS FOR BASE CHAIN – STANDARD ROLLER

Chain No.	Pitch	Main Roller Link Inside Width	Roller Dia.	Link Plate		Pin			Max. Allowable Load		Average Weight
	P	W	D	H	T	d	L_1	L_2	Carbon Steel	AS (600SS)	
	in. mm	**in.** mm	**in.** mm	**in.** mm	**in.** mm	**in.** mm	**in.** mm	**in.** mm	**lbs.** kN	**lbs.** kN	**lbs./ft.** kg/m
C2040 C2040AS	**1.000** 25.40	**0.312** 7.92	**0.312** 7.92	**0.472** 11.99	**0.060** 1.52	**0.156** 3.96	**0.319** 8.10	**0.382** 9.70	**615** 2.74	**155** 0.69	**0.340** 0.506
C2050 C2050AS	**1.250** 31.75	**0.376** 9.55	**0.400** 10.16	**0.590** 14.99	**0.080** 2.03	**0.200** 5.08	**0.409** 10.39	**0.477** 12.12	**1,010** 4.49	**230** 1.02	**0.580** 0.863
C2060H C2060HAS	**1.500** 38.10	**0.500** 12.70	**0.469** 11.91	**0.687** 17.45	**0.125** 3.18	**0.234** 5.94	**0.590** 14.99	**0.660** 16.76	**1,410** 6.27	**375** 1.67	**1.010** 1.503
C2080H C2080HAS	**2.000** 50.80	**0.626** 15.90	**0.625** 15.88	**0.943** 23.95	**0.156** 3.96	**0.312** 7.92	**0.745** 18.92	**0.845** 21.46	**2,350** 10.45	**625** 2.78	**1.770** 2.634
C2100H C2100HAS	**2.500** 63.50	**0.750** 19.05	**0.750** 19.05	**1.150** 29.21	**0.187** 4.75	**0.375** 9.53	**0.830** 21.08	**0.980** 24.89	**3,800** 16.90	**900** 4.00	**2.380** 3.542
C2120H C2120HAS	**3.000** 76.20	**1.000** 25.40	**0.875** 22.23	**1.370** 34.80	**0.219** 5.56	**0.437** 11.10	**1.030** 26.16	**1.210** 30.73	**5,380** 23.93	**1,340** 5.96	**3.410** 5.075
C2160H C2160HAS	**4.000** 101.60	**1.250** 31.75	**1.125** 28.58	**1.870** 47.50	**0.281** 7.14	**0.563** 14.30	**1.337** 33.96	**1.514** 38.46	**9,190** 40.88	**2,170** 9.65	**6.020** 8.959

NOTE: Dimensions are subject to change. Contact your Drives representative to obtain certified prints for design and construction.
NOTE: Refer to the Drives Chain Configurator at cad.timken.com/configurator.

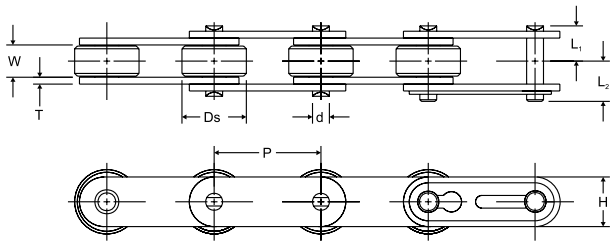

Carrier roller

TABLE 117. DIMENSIONS FOR BASE CHAIN – CARRIER ROLLER

Chain No.	Pitch P	Main Roller Link Inside Width W	Roller Dia. Ds	Link Plate H	Link Plate T	Pin d	Pin L_1	Pin L_2	Max. Allowable Load Carbon Steel	Max. Allowable Load AS (600SS)	Average Weight
	in. mm	**in.** mm	**in.** mm	**in.** mm	**in.** mm	**in.** mm	**in.** mm	**in.** mm	**lbs.** kN	**lbs.** kN	**lbs./ft.** kg/m
C2042 C2042AS	**1.000** 25.40	**0.312** 7.92	**0.625** 15.88	**0.472** 11.99	**0.060** 1.52	**0.156** 3.96	**0.319** 8.10	**0.382** 9.70	**615** 2.74	**155** 0.69	**0.580** 0.863
C2052 C2052AS	**1.250** 31.75	**0.376** 9.55	**0.750** 19.05	**0.590** 14.99	**0.080** 2.03	**0.200** 5.08	**0.409** 10.39	**0.477** 12.12	**1,010** 4.49	**230** 1.02	**0.900** 1.339
C2062H C2062HAS	**1.500** 38.10	**0.500** 12.70	**0.875** 22.23	**0.687** 17.45	**0.125** 3.18	**0.234** 5.94	**0.590** 14.99	**0.660** 16.76	**1,410** 6.27	**375** 1.67	**1.461** 2.174
C2082H C2082HAS	**2.000** 50.80	**0.626** 15.90	**1.125** 28.58	**0.943** 23.95	**0.156** 3.96	**0.312** 7.92	**0.745** 18.92	**0.845** 21.46	**2,350** 10.45	**625** 2.78	**2.450** 3.646
C2102H C2102HAS	**2.500** 63.50	**0.750** 19.05	**1.562** 39.67	**1.150** 29.21	**0.187** 4.75	**0.375** 9.53	**0.830** 21.08	**0.980** 24.89	**3,800** 16.90	**900** 4.00	**3.90** 5.804
C2122H C2122HAS	**3.000** 76.20	**1.000** 25.40	**1.750** 44.45	**1.370** 34.80	**0.219** 5.56	**0.437** 11.10	**1.030** 26.16	**1.210** 30.73	**5,380** 23.93	**1,340** 5.96	**5.40** 8.036
C2162H C2162HAS	**4.000** 101.60	**1.250** 31.75	**2.250** 57.15	**1.870** 47.50	**0.281** 7.14	**0.563** 14.30	**1.337** 33.96	**1.514** 38.46	**9,190** 40.88	**2,170** 9.65	**9.21** 13.706

NOTE: Dimensions are subject to change. Contact your Drives representative to obtain certified prints for design and construction.
NOTE: Refer to the Drives Chain Configurator at cad.timken.com/configurator.

STANDARD DOUBLE-PITCH CONVEYOR ATTACHMENTS – BA, SA, BK, SK

BA-1

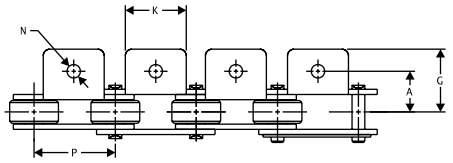

BA-2

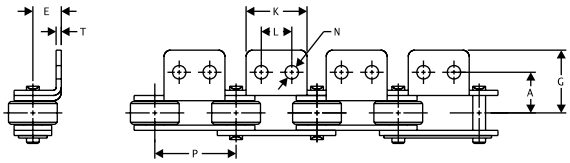

BK-1

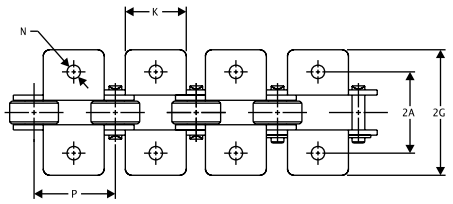

BK-2

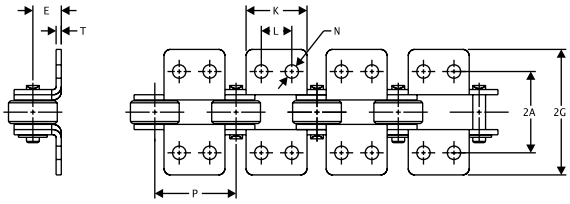

SA-1

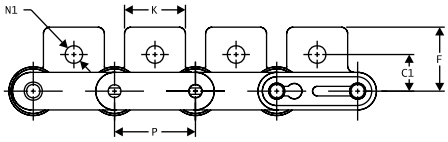

SA-2

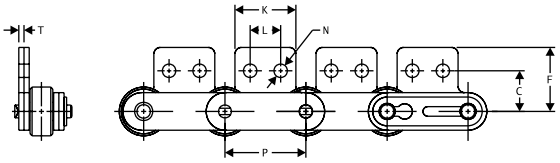

SK-1

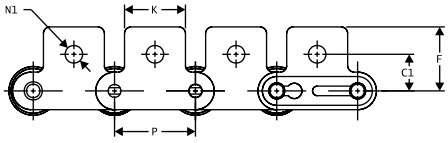

SK-2

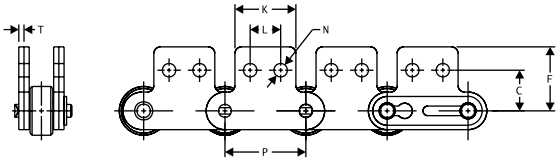

TABLE 118. DIMENSIONS FOR STANDARD ATTACHMENTS – BA, SA, BK, SK

Chain No.	Pitch	Link Plate	BA, SA, BK, SK Type Attachment												Additional Weight Per Attachment	
	P	T	K	N	L	A	E	G	2A	2G	C	F	C1	N1	BA-SA	BK-SK
	in. mm	**in.** mm	**in.** mm	**in.** mm	**in.** mm	**in.** mm	**in.** mm	**in.** mm	**in.** mm	**in.** mm	**in.** mm	**in.** mm	**in.** mm	**in.** mm	**lbs.** kN	**lbs.** kN
C2040, C2042, C2040AS, C2042AS	**1.000** 25.40	**0.060** 1.52	**0.750** 19.05	**0.142** 3.61	**0.374** 9.50	**0.500** 12.70	**0.358** 9.09	**0.750** 19.05	**1.000** 25.40	**1.500** 38.10	**0.531** 13.49	**0.780** 19.81	**0.437** 11.10	**0.205** 5.21	**0.006** 0.003	**0.013** 0.006
C2050, C2052, C2050AS, C2052AS	**1.250** 31.75	**0.080** 2.03	**0.937** 23.80	**0.205** 5.21	**0.469** 11.91	**0.625** 15.88	**0.437** 11.10	**0.953** 24.21	**1.252** 31.80	**1.906** 48.41	**0.625** 15.88	**0.969** 24.61	**0.563** 14.30	**0.268** 6.81	**0.013** 0.006	**0.026** 0.012
C2060H, C2062H, C2060HAS, C2062HAS	**1.500** 38.10	**0.125** 3.18	**1.126** 28.60	**0.205** 5.21	**0.563** 14.30	**0.844** 21.44	**0.579** 14.71	**1.230** 31.24	**1.688** 42.88	**2.460** 62.48	**0.750** 19.05	**1.205** 30.61	**0.689** 17.50	**0.346** 8.79	**0.037** 0.017	**0.075** 0.034
C2080H, C2082H, C2080HAS, C2082HAS	**2.000** 50.80	**0.156** 3.96	**1.500** 38.10	**0.268** 6.81	**0.752** 19.10	**1.094** 27.79	**0.750** 19.05	**1.598** 40.59	**2.188** 55.58	**3.196** 81.18	**1.000** 25.40	**1.583** 40.21	**0.874** 22.20	**0.406** 10.31	**0.082** 0.037	**0.163** 0.074
C2100H, C2102H, C2100HAS, C2102HAS	**2.50** 63.50	**0.189** 4.80	**1.875** 47.63	**0.323** 8.20	**0.937** 23.80	**1.312** 33.32	**0.922** 23.42	**1.950** 49.53	**2.624** 66.65	**3.900** 99.06	**1.250** 31.75	**1.984** 50.39	**1.125** 28.58	**0.516** 13.11	**0.132** 0.060	**0.265** 0.120
C2120H, C2122H, C2120HAS, C2122HAS	**3.00** 76.20	**0.219** 5.56	**2.250** 57.15	**0.386** 9.80	**1.125** 28.58	**1.562** 39.67	**1.093** 27.76	**2.390** 60.71	**3.124** 79.35	**4.780** 121.41	**1.470** 37.34	**2.361** 59.97	**1.319** 33.50	**0.578** 14.68	**0.221** 0.100	**0.441** 0.200
C2160H, C2162H, C2160HAS, C2162HAS	**4.00** 101.60	**0.281** 7.14	**3.060** 77.72	**0.516** 13.11	**1.500** 38.10	**2.062** 52.37	**1.437** 36.50	**3.060** 77.72	**4.125** 104.78	**6.120** 155.45	**2.000** 50.80	**3.093** 78.56	**1.75** 44.45	**0.771** 19.58	**0.468** 0.212	**0.895** 0.406

NOTE: Dimensions are subject to change. Contact your Drives representative to obtain certified prints for design and construction.
NOTE: Refer to the Drives Chain Configurator at cad.timken.com/configurator.

STANDARD DOUBLE-PITCH CONVEYOR ATTACHMENTS – D-1, D-3

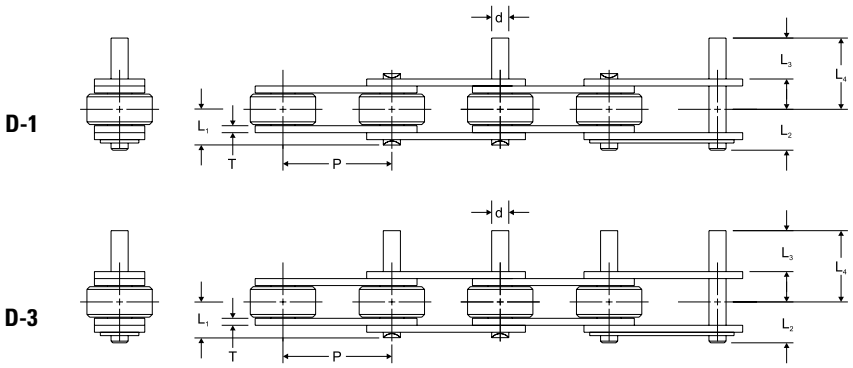

TABLE 119. DIMENSIONS FOR STANDARD DOUBLE-PITCH CONVEYOR ATTACHMENTS – D-1, D-3

Chain No.	P	T	d	L_1	L_2	L_3	L_4	Additional Weight Per Attachment	
								D-1	D-3
	in. mm	**in.** mm	**in.** mm	**in.** mm	**in.** mm	**in.** mm	**in.** mm	**lbs.** kN	**lbs.** kN
C2040, C2042, C2040AS, C2042AS	**1.000** 25.40	**0.060** 1.52	**0.156** 3.96	**0.317** 8.05	**0.377** 9.58	**0.374** 9.50	**0.661** 16.79	**0.002** 0.001	**0.004** 0.002
C2050, C2052, C2050AS, C2052AS	**1.250** 31.75	**0.080** 2.03	**0.200** 5.08	**0.399** 10.13	**0.489** 12.42	**0.469** 11.91	**0.827** 21.01	**0.004** 0.002	**0.008** 0.004
C2060H, C2062H, C2060HAS, C2062HAS	**1.500** 38.10	**0.125** 3.18	**0.234** 5.94	**0.590** 14.99	**0.660** 16.76	**0.563** 14.30	**1.083** 27.51	**0.006** 0.003	**0.012** 0.005
C2080H, C2082H, C2080HAS, C2082HAS	**2.000** 50.80	**0.156** 3.96	**0.313** 7.95	**0.745** 18.92	**0.845** 21.46	**0.752** 19.10	**1.401** 35.59	**0.020** 0.009	**0.040** 0.018
C2100H, C2102H, C2100HAS, C2102HAS	**2.500** 63.50	**0.187** 4.75	**0.375** 9.53	**0.830** 21.08	**0.980** 24.89	**0.937** 23.80	**1.687** 42.85	**0.027** 0.012	**0.054** 0.024
C-2120H, C2122H, C-2120HAS, C2122HAS	**3.000** 76.20	**0.219** 5.56	**0.437** 11.10	**1.030** 26.16	**1.210** 30.73	**1.125** 28.58	**2.062** 52.37	**0.044** 0.020	**0.088** 0.040
C-2160H, C2164H, C-2160HAS, C2164HAS	**4.000** 101.60	**0.281** 7.14	**0.562** 14.27	**1.337** 33.96	**1.514** 38.46	**1.500** 38.10	**2.718** 69.04	**0.099** 0.045	**0.198** 0.090

NOTE: Dimensions are subject to change. Contact your Drives representative to obtain certified prints for design and construction.
NOTE: Refer to the Drives Chain Configurator at cad.timken.com/configurator.

SPECIALTY DRIVE AND CONVEYOR CHAIN

16B STAINLESS STEEL



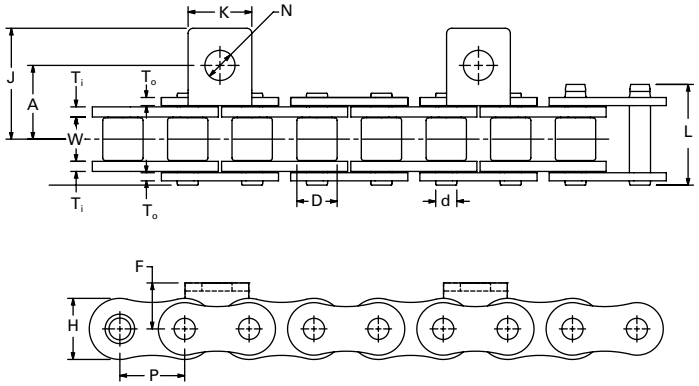

TABLE 120. 16B STAINLESS STEEL SPECIFICATIONS

Chain No.	Pitch	Minimum Inside Width	Pin	Roller	Sidebar			Pin Length	Maximum Recommended Working Load	Weight
	P	W	d	D	T_i	T_o	H	L		
	in. mm	**in.** mm	**in.** mm	**in.** mm	**in.** mm	**in.** mm	**in.** mm	**in.** mm	**lbs.** kN	**lbs./ft.** kg/M
D16B	**1.000** 25.400	**0.670** 17.12	**0.326** 8.28	**0.625** 15.88	**0.156** 3.96	**0.125** 3.18	**0.945** 24.00	**1.530** 38.86	**455** 2.02	**2.000** 2.98

NOTE: H dimension does not meet BS Standard BS228.
NOTE: Dimensions are subject to change. Contact Drives to obtain certified prints for design and construction.
NOTE: Refer to the Drives Chain Configurator at cad.timken.com/configurator.

TABLE 121. 16B STAINLESS STEEL CONVEYOR CHAIN ATTACHMENTS

Chain No.	Pitch	Dimensions				
	P	A	J	K	F	N
	in. mm	**in.** mm	**in.** mm	**in.** mm	**in.** mm	**in.** mm
BA1	16B	**1.000** 25.40	**1.120** 28.45	**1.680** 42.67	**0.720** 18.29	**0.470** 11.94

NOTE: Some chain products or attachments shown are proprietary.
NOTE: Dimensions are subject to change. Contact Drives to obtain certified prints for design and construction.
NOTE: Refer to the Drives Chain Configurator at cad.timken.com/configurator.

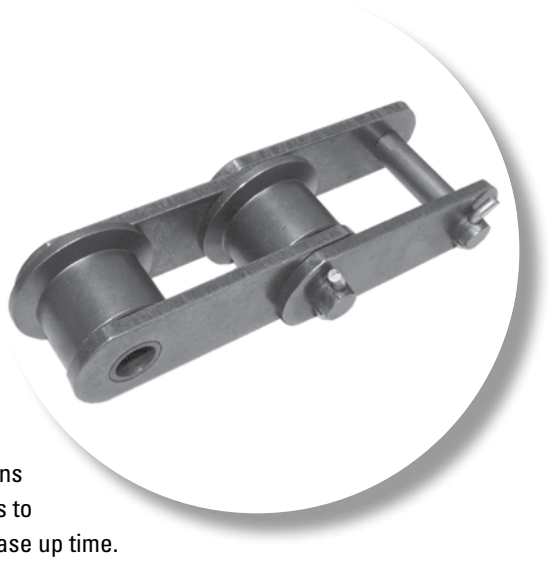

ENGINEERED CLASS

Engineered Class chain is designed for your industries and unique applications. Drives Engineers work with customers on chain selections for new applications and evaluating existing applications to determine if there is a way to increase up time.

Drives state of art component and assembly tooling in junction within house heat treatment provides for high quality Engineered Class Chain designed to provide for increased up time.

All high quality chains must start with material selected and Drives uses alloy steel and appropriate heat treatment specifications for the components which will optimize the performance of our Engineered Class chain in these demanding applications.

Engineered Class – General. 126
Engineered Class Chain – By Industry 137
- Automotive 138
- Material Handling 139
- Food Processing. 143
- Forest and Paper 147
- Metal Processing. 157
- Mining Industry 161
- Sugar Mill Chain. 163
- Agricultural Conveyor Chain Products. 167

ENGINEERED CLASS CHAIN – GENERAL

CARBON STEEL ROLLER CONVEYOR CHAIN

Carbon steel roller chain is designed with a free-rotating roller for conveyor applications.

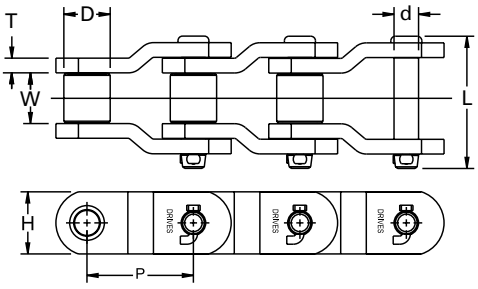

Offset style

TABLE 122. CARBON STEEL ROLLER CONVEYOR CHAIN

Chain No.	Pitch P	Inside Width W	Pin Dia. d	Roller Dia. D	Roller Face Width F	Roller Style	Outside Link Plate T_0	Inside Link Plate T_I	Link Plate Height H	Overall Pin Length L	Chain Style	Average Tensile Strength	Maximum Recommended Working Load	Weight
	in. mm	**in.** mm	**in.** mm	**in.** mm	**in.** mm		**in.** mm	**in.** mm	**in.** mm	**in.** mm		**lbs.** kN	**lbs.** kN	**lbs./ft.** kg/m
CA550	**1.630** 41.40	**0.797** 20.24	**0.281** 7.14	**0.656** 16.66		Small	**0.105** 2.67	**0.105** 2.67	**0.750** 19.05	**1.562** 39.67	Straight	**11,250** 50.04	**1,400** 6.23	**1.279** 1.90
CA550HD	**1.630** 41.40	**0.767** 19.48	**0.326** 8.28	**0.656** 16.66		Small	**0.120** 3.05	**0.120** 3.05	**0.780** 19.81	**1.586** 40.28	Straight	**11,500** 51.15	**1,700** 7.56	**1.409** 2.10
CA555	**1.630** 41.40	**0.500** 12.70	**0.281** 7.14	**0.656** 16.66		Small	**0.120** 3.05	**0.120** 3.05	**0.750** 19.05	**1.302** 33.07	Straight	**11,250** 50.04	**1,100** 4.89	**1.238** 1.84
CA557	**1.630** 41.40	**0.797** 20.24	**0.315** 8.00	**0.700** 17.78		Small	**0.120** 3.05	**0.120** 3.05	**0.906** 23.01	**1.593** 40.46	Straight	**16,500** 73.39	**1,700** 7.56	**1.719** 2.56
CA960	**1.630** 41.40	**0.890** 22.61	**0.350** 8.89	**0.700** 17.78		Small	**0.120** 3.05	**0.120** 3.05	**0.910** 23.11	**1.580** 40.13	Straight	**15,500** 68.94	**2,050** 9.12	**1.809** 2.69
CA620	**1.654** 42.01	**0.987** 25.07	**0.281** 7.14	**0.696** 17.68		Small	**0.120** 3.05	**0.120** 3.05	**0.750** 19.05	**1.841** 46.76	Straight	**12,000** 53.38	**1,700** 7.56	**1.609** 2.39
378R	**1.654** 42.01	**1.000** 25.40	**0.437** 11.10	**0.875** 22.23		Small	**0.187** 4.75	**0.187** 4.75	**1.125** 28.58	**2.280** 57.91	Straight	**13,000** 57.82	**2,100** 9.34	**3.700** 5.51
378RX	**1.654** 42.01	**1.000** 25.40	**0.437** 11.10	**0.875** 22.23		Small	**0.187** 4.75	**0.187** 4.75	**1.125** 28.58	**2.280** 57.91	Straight	**20,000** 88.96	**2,100** 9.34	**3.700** 5.51
61X	**1.654** 42.01	**1.060** 26.92	**0.437** 11.10	**0.906** 23.01		Small	**0.310** 7.87	**0.310** 7.87	**1.332** 33.83	**2.763** 70.18	Straight	**42,000** 186.82	**3,700** 16.46	**4.600** 6.85
D20002	**2.000** 50.80	**1.250** 31.75	**0.560** 14.22	**1.121** 28.47		Small	**0.250** 6.35	**0.250** 6.35	**1.500** 38.10	**2.810** 71.37	Straight	**21,000** 93.41	**3,500** 15.57	**6.200** 9.23
D64S	**2.500** 63.50	**1.500** 38.10	**0.875** 22.23	**1.560** 39.62		Small	**0.375** 9.53	**0.375** 9.53	**2.130** 54.10	**3.190** 81.03	Straight	**125,000** 556.00	**6,891** 30.65	**13.100** 19.50
81X	**2.609** 66.27	**1.060** 26.92	**0.437** 11.10	**0.906** 23.01		Small	**0.155** 3.94	**0.155** 3.94	**1.125** 28.58	**1.930** 49.02	Straight	**24,000** 106.75	**3,000** 13.34	**2.500** 3.72
81XH	**2.609** 66.27	**1.060** 26.92	**0.437** 11.10	**0.906** 23.01		Small	**0.220** 5.59	**0.310** 7.87	**1.332** 33.83	**2.577** 65.46	Straight	**42,000** 186.82	**3,700** 16.46	**4.120** 6.13
81XHT	**2.609** 66.27	**1.060** 26.92	**0.437** 11.10	**0.906** 23.01		Small	**0.220** 5.59	**0.220** 5.59	**1.125** 28.58	**2.577** 65.46	Straight	**34,000** 151.23	**3,300** 14.68	**3.800** 5.66
81XHH	**2.609** 66.27	**1.060** 26.92	**0.437** 11.10	**0.906** 23.01		Small	**0.310** 7.87	**0.310** 7.87	**1.332** 33.83	**2.763** 70.18	Straight	**42,000** 186.82	**3,700** 16.46	**4.600** 6.85
81XKD	**2.609** 66.27	**1.060** 26.92	**0.437** 11.10	**0.906** 23.01		Small	**0.155** 3.94	**0.155** 3.94	**1.125** 28.58	**1.930** 49.02	Straight	**24,000** 106.75	**3,000** 13.34	**2.500** 3.72
81XHKD	**2.609** 66.27	**1.060** 26.92	**0.437** 11.10	**0.906** 23.01		Small	**0.220** 5.59	**0.310** 7.87	**1.332** 33.83	**2.370** 60.20	Straight	**42,000** 186.82	**3,700** 16.46	**4.120** 6.13
3000HKD	**3.000** 76.20	**1.312** 33.32	**0.750** 19.05	**1.500** 38.10		Small	**0.375** 9.53	**0.375** 9.53	**2.000** 50.80	**3.220** 81.79	Straight	**70,000** 311.36	**7,100** 31.58	**10.700** 15.92

Continued on next page.

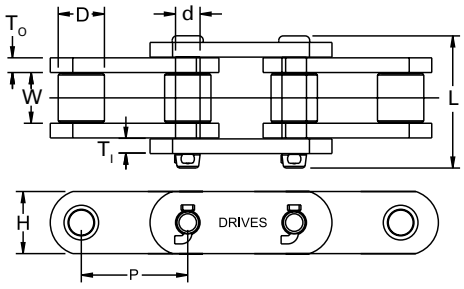

Straight style small roller

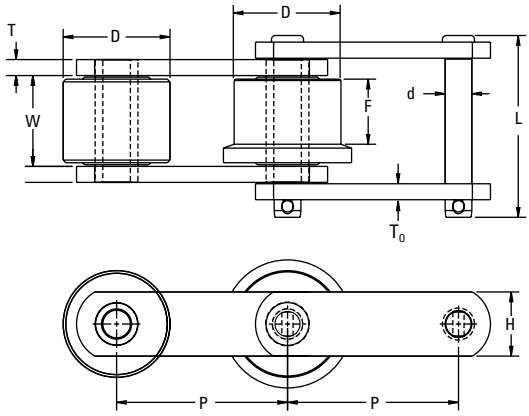

Straight style large roller

Continued from previous page.

Chain No.	Pitch P	Inside Width W	Pin Dia. d	Roller Dia. D	Roller Face Width F	Roller Style	Outside Link Plate T_o	Inside Link Plate T_i	Link Plate Height H	Overall Pin Length L	Chain Style	Average Tensile Strength	Maximum Recommended Working Load	Weight
	in. mm	**in.** mm	**in.** mm	**in.** mm	**in.** mm		**in.** mm	**in.** mm	**in.** mm	**in.** mm		**lbs.** kN	**lbs.** kN	**lbs./ft.** kg/m
53R	**3.000** 76.20	**1.000** 25.40	**0.437** 11.10	**1.500** 38.10		Large	**0.187** 4.75	**0.187** 4.75	**1.125** 28.58	**2.280** 57.91	Straight	**13,000** 57.82	**2,100** 9.34	**3.900** 5.80
3160	**3.000** 76.20	**1.25** 31.75	**0.56** 14.22	**1.12** 28.45		Small	**0.25** 6.35	**0.25** 6.35	**1.50** 38.10	**2.87** 72.90	Straight	**47,000** 209.06	**3,445** 15.32	**5.14** 7.64
3162	**3.000** 76.20	**1.250** 31.75	**0.560** 14.22	**2.250** 57.15		Large	**0.250** 6.35	**0.250** 6.35	**1.500** 38.10	**2.870** 72.90	Straight	**47,000** 209.06	**3,445** 15.32	**7.420** 11.04
3162	**3.000** 76.20	**1.250** 31.75	**0.560** 14.22	**1.575** 40.01	**0.953** 24.21	Flange	**0.250** 6.35	**0.250** 6.35	**1.500** 38.10	**2.870** 72.90	Straight	**47,000** 209.06	**3,445** 15.32	**11.810** 17.58
4160	**4.000** 101.60	**1.27** 32.26	**0.56** 14.22	**1.12** 28.45		Small	**0.31** 7.92	**0.31** 7.92	**1.88** 47.63	**3.12** 79.25	Straight	**47,000** 209.06	**3,712** 16.51	**6.13** 9.13
88R	**4.000** 101.60	**0.876** 22.25	**0.625** 15.88	**2.000** 50.80		Large	**0.250** 6.35	**0.250** 6.35	**1.500** 38.10	**2.468** 62.69	Straight	**25,140** 111.82	**3,000** 13.34	**6.054** 9.01
89R	**4.000** 101.60	**1.312** 33.32	**0.625** 15.88	**2.250** 57.15		Large	**0.375** 9.53	**0.375** 9.53	**1.500** 38.10	**3.470** 88.14	Straight	**28,000** 124.54	**4,500** 20.02	**10.600** 15.77
95R	**4.000** 101.60	**1.000** 25.40	**0.440** 11.18	**1.500** 38.10		Large	**0.190** 4.83	**0.190** 4.83	**1.125** 28.58	**2.280** 57.91	Straight	**13,000** 57.82	**2,100** 9.34	**3.400** 5.06
2184R	**6.000** 152.40	**1.380** 35.05	**0.880** 22.35	**3.000** 76.20		Large	**0.380** 9.65	**0.380** 9.65	**2.000** 50.80	**3.750** 95.25	Offset	**43,000** 191.26	**6,500** 28.91	**12.300** 18.30
2184R	**6.000** 152.40	**1.380** 35.05	**0.880** 22.35	**3.000** 76.20	**1.180** 29.97	Flange	**0.380** 9.65	**0.380** 9.65	**2.000** 50.80	**3.750** 95.25	Offset	**43,000** 191.26	**6,500** 28.91	**12.300** 18.30
2184RX	**6.000** 152.40	**1.380** 35.05	**0.880** 22.35	**3.000** 76.20		Large	**0.380** 9.65	**0.380** 9.65	**2.000** 50.80	**3.750** 95.25	Offset	**75,000** 333.60	**6,500** 28.91	**12.300** 18.30
2184RX	**6.000** 152.40	**1.380** 35.05	**0.880** 22.35	**3.000** 76.20	**1.180** 29.97	Flange	**0.380** 9.65	**0.380** 9.65	**2.000** 50.80	**3.750** 95.25	Offset	**75,000** 333.60	**6,500** 28.91	**12.300** 18.30
2198RX	**6.000** 152.40	**1.50** 38.10	**0.88** 22.35	**2.75** 69.85	0.00	Large	**0.50** 12.70	**0.50** 12.70	**2.25** 57.15	**4.07** 103.38	Straight	**100,000** 444.80	**7,700** 34.25	**1.30** 1.93
3939	**8.000** 203.20	**1.060** 26.92	**0.432** 10.97	**0.906** 23.01		Small	**0.155** 3.94	**0.155** 3.94	**1.125** 28.58	**1.930** 49.02	Straight	**24,000** 106.75	**3,000** 13.34	**1.550** 2.31
1203	**12.000** 304.80	**3.040** 77.22	**1.000** 25.40	**2.230** 56.64		Small	**0.380** 9.65	**0.380** 9.65	**3.000** 76.20	**4.500** 114.30	Offset	**91,000** 404.77	**10,600** 47.15	**24.000** 35.72
12230	**12.000** 304.80	**4.100** 104.14	**1.500** 38.10	**3.500** 88.90		Small	**0.625** 15.88	**0.625** 15.88	**4.000** 101.60	**7.600** 193.04	Offset	**280,000** 1,245.44	**36,300** 161.46	**39.200** 58.34

STAINLESS STEEL ROLLER CONVEYOR CHAIN

Direct contact with food, corrosive environments and extreme temperature requires stainless steel chains. Drives has the engineering expertise to select the correct stainless material and chain construction for your application. The following chains are just a sample of some of the stainless steel Engineered Class chain that we manufacture.

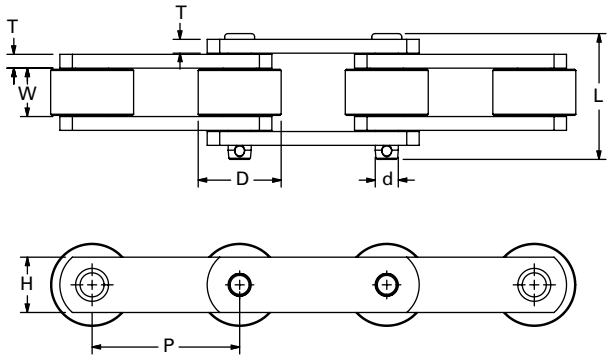

TABLE 123. STAINLESS STEEL ROLLER CONVEYOR CHAIN

Material: Side plates are 300SS and round parts are 17-4PH											
Chain No.	Pitch P	Inside Width W	Pin Dia. d	Roller Dia. D	Roller Style	Outside Link Plate T	Link Plate Height H	Overall Pin Length L	Chain Style	Maximum Recommended Working Load	Weight
	in. mm	**in.** mm	**in.** mm	**in.** mm		**in.** mm	**in.** mm	**in.** mm		**lbs.** kN	**lbs./ft.** kg/m
D3625	**3.625** 92.08	**1.030** 26.16	**0.440** 11.18	**1.750** 44.45	Large	**0.190** 4.83	**1.310** 33.27	**2.330** 59.18	Straight	**1,318** 5.86	**5.420** 8.07
D4375	**4.375** 111.13	**1.300** 33.02	**0.440** 11.18	**2.000** 50.80	Large	**0.190** 4.83	**1.310** 33.27	**2.330** 59.18	Straight	**1,300** 5.78	**5.050** 7.52
D5125 w/1.75" Roller	**5.125** 130.18	**1.300** 33.02	**0.440** 11.18	**1.750** 44.45	Large	**0.190** 4.83	**1.310** 33.27	**2.330** 59.18	Straight	**1,318** 5.86	**4.800** 7.14
D5125 w/2.0" Roller	**5.125** 130.18	**1.300** 33.02	**0.440** 11.18	**2.000** 50.80	Large	**0.190** 4.83	**1.310** 33.27	**2.330** 59.18	Straight	**1,318** 5.86	**5.350** 7.96
D5125 w/2.25" Roller	**5.125** 130.18	**1.300** 33.02	**0.440** 11.18	**2.250** 57.15	Large	**0.190** 4.83	**1.310** 33.27	**2.330** 59.18	Straight	**1,318** 5.86	**4.800** 7.14

CARBON STEEL BUSHED CONVEYOR CHAIN

Carbon steel bushed conveyor chains are designed without a free- rotating roller for applications in which the chain will be exposed to an environment that would cause a roller conveyor chain's roller to seize or in applications that are such a roller has no advantage like in bucket elevators.

All high-quality chains must start with material selected and Drives uses alloy steel and appropriate heat treatment specifications for the components which will optimize the performance of our Engineered Class chain in these demanding applications.

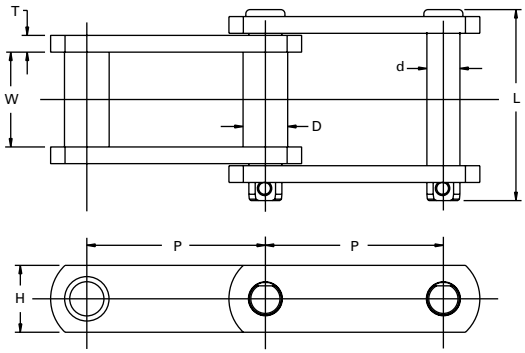

TABLE 124. CARBON STEEL BUSHED CONVEYOR CHAIN

Chain No.	Pitch P	Inside Width W	Pin Dia. d	Bushing Dia. D	Link Plate Thickness T	Link Plate Height H	Overall Pin Length L	Average Tensile Strength	Maximum Recommended Working Load	Weight
	in. mm	**in.** mm	**in.** mm	**in.** mm	**in.** mm	**in.** mm	**in.** mm	**lbs.** kN	**lbs.** kN	**lbs./ft.** kg/m
CA551X	**1.630** 41.40	**0.797** 20.24	**0.437** 11.10	**0.656** 16.66	**0.155** 3.94	**1.125** 28.58	**1.813** 46.05	**20,000** 88.96	**2,400** 10.68	**2.424** 3.61
D2	**2.000** 50.80	**1.250** 31.75	**0.720** 18.29	**1.130** 28.70	**0.310** 7.87	**1.880** 47.75	**3.380** 85.85	**90,000** 400.32	**4,920** 21.88	**8.300** 12.35
D1240	**12.400** 314.96	**2.660** 67.56	**1.410** 35.81	**1.970** 50.04	**0.500** 12.70	**3.500** 88.90	**5.530** 140.46	**190,822** 848.78	**23,223** 103.30	**17.940** 26.70

STAINLESS STEEL BUSHED CONVEYOR CHAINS

Stainless steel bushed conveyor chains are designed without a free-rotating roller for those applications in which the chain will be exposed to an environment that would cause a roller conveyor chain's roller to seize or in applications that are such a roller has no advantage like in bucket elevators.

Direct contact with food, corrosive environments, and extreme temperature requires stainless steel chains and Drives has the Engineering expertise to select the correct stainless material and chain construction for your application. The following chains are just a sample of some of the stainless steel Engineered Class chain that we manufacture.



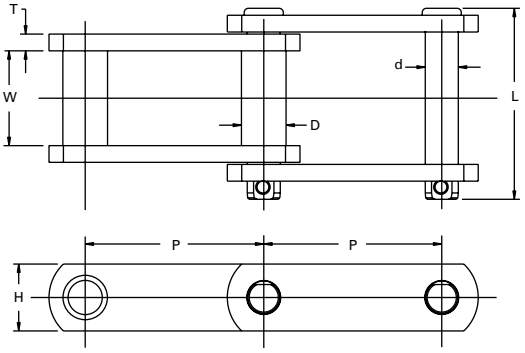

TABLE 125. STAINLESS STEEL BUSHED CONVEYOR CHAIN

Material: Side plates are 300SS and round parts are 17-4PH									
Chain No.	Pitch P	Inside Width W	Pin Dia. d	Bushing Dia. D	Link Plate Thickness T	Link Plate Height H	Overall Pin Length L	Maximum Recommended Working Load	Weight
	in. mm	**in.** mm	**in.** mm	**in.** mm	**in.** mm	**in.** mm	**in.** mm	**lbs.** kN	**lbs./ft.** kg/m
188SS	**2.609** 66.27	**1.062** 26.97	**0.500** 12.70	**0.880** 22.35	**0.250** 6.35	**1.125** 28.58	**2.690** 68.33	**1,664** 7.40	**3.600** 5.36
102BSS	**4.000** 101.60	**2.130** 54.10	**0.625** 15.88	**1.000** 25.40	**0.375** 9.53	**1.500** 38.10	**4.310** 109.47	**3,834** 17.05	**6.900** 10.27

BAR AND PIN CHAIN

Bar and Pin chain are used in a variety of applications, from conveyors like stacker reclaimers to tensioning linkages. These chains are manufactured with an inner block and two outer bars. They will have a pressed-in bushing into the inner block for improved wear life between the pin and inner block. In some cases the pins are induction-hardened for improved wear life. The edges of the inner block and outer bars can be induction-hardened for improved wear life since the chains are dragged on the guides.

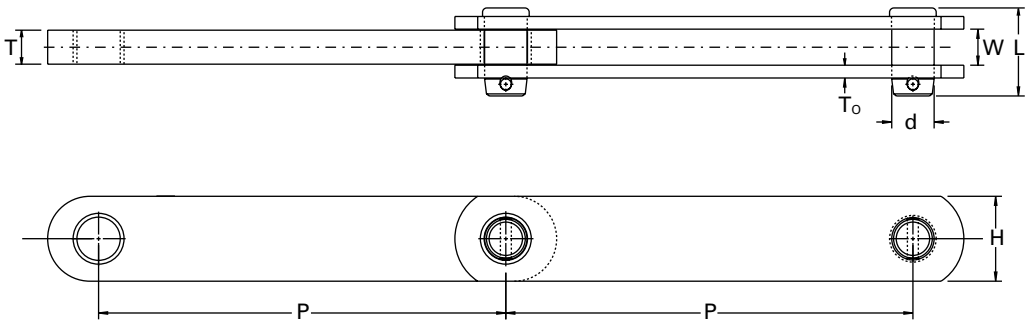

TABLE 126. STEEL BAR AND PIN CHAIN

Chain No.	Pitch P	Inside Width W	Pin Dia. d	Outside Link Plate Thickness T_0	Inside Link Plate Thickness T_I	Link Plate Height H	Overall Pin Length L	Average Tensile Strength	Maximum Recommended Working Load	Weight
	in. mm	**in.** mm	**in.** mm	**in.** mm	**in.** mm	**in.** mm	**in.** mm	**lbs.** kN	**lbs.** kN	**lbs./ft.** kg/m
D1201	**12.000** 304.80	**1.062** 26.97	**1.250** 31.75	**0.380** 9.65	**1.000** 25.40	**1.160** 29.46	**2.600** 66.04	**108,000** 480.38	**5,625** 25.02	**12.740** 18.96
D1202	**12.000** 304.80	**1.562** 39.67	**1.500** 38.10	**0.500** 12.70	**1.500** 38.10	**1.590** 40.39	**3.500** 88.90	**170,000** 756.16	**10,125** 45.04	**19.430** 28.92

STAINLESS WELDED STEEL CHAIN

Drives produces the Stainless Welded Steel Chain for horizontal, incline and vertical conveying applications that operate in a corrosive environment. The side bars and barrels are manufactured from 300 series stainless steel material for optimum corrosion resistance. The pins are manufactured from 17-4PH (precipitation hardened) stainless steel. This special pin material provides corrosion resistance and a hard surface to maximize the wear life of the chain.

- Chain numbers WSX124, WSXH124 and WSX132 are made-to-order in stainless steel with riveted or cottered construction with minimum order quantities.
- These stainless steel chains also can be provided with electroless nickel-plated pins for less-corrosive environments. Contact Drives engineering for application information.

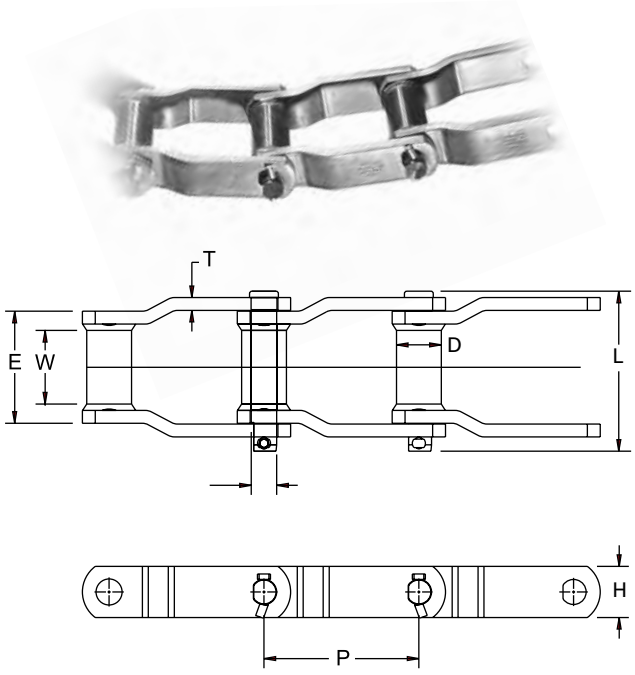

TABLE 127. STAINLESS WELDED STEEL CHAIN

Material: Side plates and barrel are 300ss and pins are 17-4ph										
Chain No.	Pitch P	Inside Width W	Pin Diameter d	Bushing Diameter D	Bushing Length E	Link Plate Thickness T	Link Plate Height H	Overall Pin Length L	Maximum Recommended Working Load	Weight
	in. mm	**in.** mm	**in.** mm	**in.** mm	**in.** mm	**in.** mm	**in.** mm	**in.** mm	**lbs.** kN	**lbs./ft.** kg/m
WSX78	**2.609** 66.27	**1.120** 28.45	**0.500** 12.70	**0.880** 22.35	**2.010** 51.05	**0.250** 6.35	**1.120** 28.45	**3.340** 84.84	**2,140** 9.52	**4.30** 6.40
WCSX78	**2.609** 66.27	**1.120** 28.45	**0.500** 12.70	**0.880** 22.35	**2.010** 51.05	**0.250** 6.35	**1.120** 28.45	**3.340** 84.84	**2,140** 9.52	**5.00** 7.44
WSX124	**4.000** 101.60	**1.630** 41.40	**0.750** 19.05	**1.250** 31.75	**2.750** 69.85	**0.380** 9.65	**1.500** 38.10	**4.250** 107.95	**4,400** 19.57	**8.00** 11.91
WCSX124	**4.000** 101.60	**1.630** 41.40	**0.750** 19.05	**1.250** 31.75	**2.750** 69.85	**0.380** 9.65	**1.500** 38.10	**4.250** 107.95	**4,400** 19.57	**9.00** 13.39
WSX132	**6.050** 153.67	**2.880** 73.15	**1.000** 25.40	**1.750** 44.45	**4.380** 111.25	**0.500** 12.70	**2.000** 50.80	**6.250** 158.75	**9,330** 41.50	**14.00** 20.83
WCSX132	**6.050** 153.67	**2.880** 73.15	**1.000** 25.40	**1.750** 44.45	**4.380** 111.25	**0.500** 12.70	**2.000** 50.80	**6.250** 158.75	**9,330** 41.50	**15.40** 22.92
WSX157	**6.050** 153.67	**2.750** 69.85	**1.125** 28.58	**1.750** 44.45	**4.670** 118.62	**0.625** 15.88	**2.500** 63.50	**7.060** 179.32	**11,200** 49.82	**20.00** 29.76
WCSX157	**6.050** 153.67	**2.750** 69.85	**1.125** 28.58	**1.750** 44.45	**4.670** 118.62	**0.625** 15.88	**2.500** 63.50	**7.060** 179.32	**11,200** 49.82	**21.20** 31.55
WSX157H	**6.050** 153.67	**3.000** 76.20	**1.125** 28.58	**1.750** 44.45	**4.825** 122.56	**0.750** 19.05	**2.500** 63.50	**7.188** 182.58	**11,500** 51.15	**21.40** 31.85
WCSX157H	**6.050** 153.67	**3.000** 76.20	**1.125** 28.58	**1.750** 44.45	**4.825** 122.56	**0.750** 19.05	**2.500** 63.50	**7.188** 182.58	**11,500** 51.15	**22.40** 33.34

HOLLOW PIN CHAIN

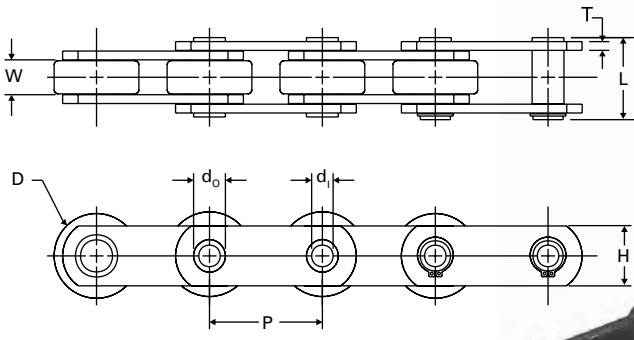



TABLE 128. HOLLOW PIN CHAIN

Chain No.	Pitch P	Inside Width W	Hollow Pin Inside Diameter d_I	Hollow Pin Outside Diameter d_O	Roller Diameter D	Link Plate Thickness T	Link Plate Height H	Overall Pin Length L	Average Tensile Strength	Maximum Allowable Working Load	Weight
	in. mm	**in.** mm	**in.** mm	**in.** mm	**in.** mm	**in.** mm	**in.** mm	**in.** mm	**lbs.** kN	**lbs.** kN	**lbs./ft.** kg/m
HP200	**2.000** 50.80	**0.617** 15.67	**0.382** 9.70	**0.564** 14.33	**1.500** 38.10	**0.156** 3.96	**1.060** 26.92	**1.453** 36.91	**15,000** 66.72	**2,600** 11.56	**2.500** 3.72

ENGINEERED CLASS DRIVE CHAIN

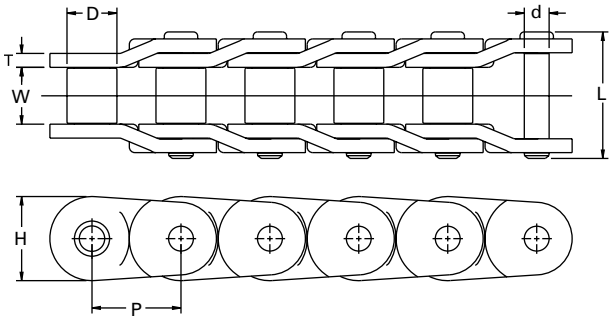

TABLE 129. ENGINEERED CLASS DRIVE CHAIN

Chain No.	Pitch P	Inside Width W	Pin Diameter d	Roller Diameter D	Link Plate Thickness T	Link Plate Height H	Overall Pin Length L	Average Tensile Strength	Maximum Allowable Working Load	Weight
	in. mm	**in.** mm	**in.** mm	**in.** mm	**in.** mm	**in.** mm	**in.** mm	**lbs.** kN	**lbs.** kN	**lbs./ft.** kg/m
DO3120	**1.500** 38.10	**1.000** 25.40	**0.437** 11.10	**0.875** 22.23	**0.187** 4.75	**1.425** 36.20	**2.190** 55.63	**34,000** 151.23	**2,100** 9.34	**4.100** 6.10
DO3140	**0.175** 4.45	**1.000** 25.40	**0.500** 12.70	**1.000** 25.40	**0.220** 5.59	**1.663** 42.24	**2.506** 63.65	**46,000** 204.61	**2,520** 11.21	**5.100** 7.59
DO3160	**2.000** 50.80	**1.250** 31.75	**0.562** 14.27	**1.125** 28.58	**0.250** 6.35	**1.899** 48.23	**2.824** 71.73	**58,000** 257.98	**3,450** 15.35	**6.700** 9.97
DO3180	**2.250** 57.15	**1.406** 35.71	**0.687** 17.45	**1.406** 35.71	**0.281** 7.14	**2.132** 54.15	**2.951** 74.96	**80,000** 355.84	**4,800** 21.35	**9.600** 14.29
DO3200	**2.500** 63.50	**1.500** 38.10	**0.781** 19.84	**1.562** 39.67	**0.312** 7.92	**2.312** 58.72	**3.433** 87.20	**95,000** 422.56	**5,800** 25.80	**11.100** 16.52
DO3264	**2.500** 63.50	**1.500** 38.10	**0.875** 22.23	**1.562** 39.67	**0.375** 9.53	**2.375** 60.33	**3.687** 93.65	**135,000** 600.48	**6,900** 30.69	**12.600** 18.75
DO3240	**3.000** 76.20	**1.875** 47.63	**0.937** 23.80	**1.875** 47.63	**0.375** 9.53	**2.812** 71.42	**4.066** 103.28	**152,200** 676.99	**8,600** 38.25	**16.700** 24.85
D1245	**4.073** 103.45	**1.940** 49.28	**0.937** 23.80	**1.775** 45.09	**0.562** 14.27	**2.375** 60.33	**5.130** 130.30	**170,000** 756.16	**10,100** 44.92	**18.000** 26.79

ENGINEERED CLASS PINTLE CHAIN

Pintle chain is used in applications that convey bulk product like salt and sand spreaders, manure spreaders or live bed trucks. This chain is manufactured with an open-back design, which allows product to be pushed out of the chain joint to prevent stiff joints.

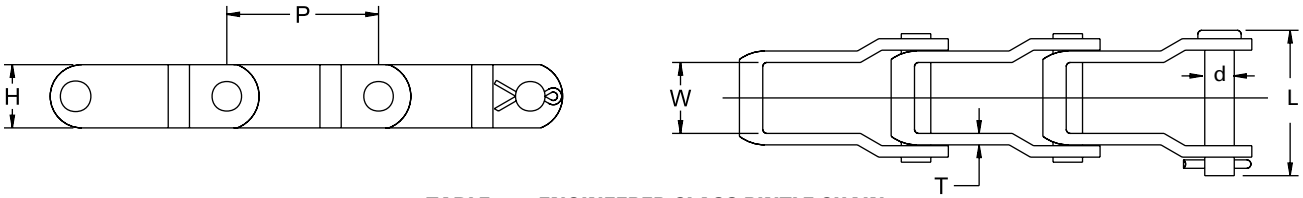

TABLE 130. ENGINEERED CLASS PINTLE CHAIN

Chain No.	Pitch P	Inside Width W	Pin Diameter d	Link Plate Thickness T	Link Plate Height H	Overall Pin Length L	Average Tensile Strength	Maximum Recommended Working Load	Weight
	in. mm	**in.** mm	**in.** mm	**in.** mm	**in.** mm	**in.** mm	**lbs.** kN	**lbs.** kN	**lbs./ft.** kg/m
D205	**1.250** 31.75	**0.375** 9.53	**0.200** 5.08	**0.080** 2.03	**0.470** 11.94	**0.922** 23.42	**4,900** 21.80	**560** 2.49	**0.390** 0.58
D662	**1.664** 42.27	**0.906** 23.01	**0.281** 7.14	**0.125** 3.18	**0.720** 18.29	**1.672** 42.47	**11,200** 49.82	**1,700** 7.56	**1.050** 1.56
D667H	**2.313** 58.75	**1.000** 25.40	**0.312** 7.92	**0.125** 3.18	**0.875** 22.23	**1.906** 48.41	**12,900** 57.38	**1,900** 8.45	**1.170** 1.74
D667X	**2.250** 57.15	**1.063** 27.00	**0.437** 11.10	**0.170** 4.32	**0.937** 23.80	**2.172** 55.17	**21,700** 96.52	**3,000** 13.34	**1.860** 2.77
D667K	**2.250** 57.15	**1.078** 27.38	**0.437** 11.10	**0.200** 5.08	**1.062** 26.97	**2.359** 59.92	**29,700** 132.11	**4,000** 17.79	**2.440** 3.63
D88K	**2.609** 66.27	**1.078** 27.38	**0.437** 11.10	**0.200** 5.08	**1.062** 26.97	**2.359** 59.92	**26,900** 119.65	**4,000** 17.79	**2.300** 3.42

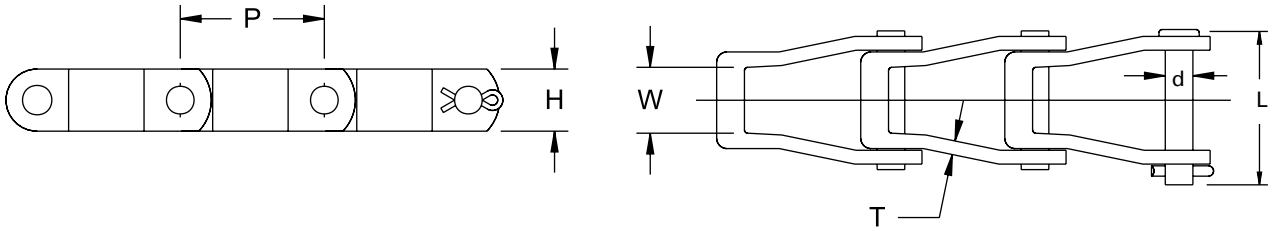

TABLE 131. ENGINEERED CLASS COMPRESSION FORMED PINTLE CHAIN

Chain No.	Pitch P	Inside Width W	Pin Diameter d	Link Plate Thickness T	Link Plate Height H	Overall Pin Length L	Average Tensile Strength	Maximum Recommended Working Load	Weight
	in. mm	**in.** mm	**in.** mm	**in.** mm	**in.** mm	**in.** mm	**lbs.** kN	**lbs.** kN	**lbs./ft.** kg/m
D667XC	**2.250** 57.15	**1.063** 27.00	**0.437** 11.10	**0.170** 4.32	**0.937** 23.80	**2.172** 55.17	**25,100** 111.64	**3,600** 16.01	**2.100** 3.13
D667KC	**2.250** 57.15	**1.078** 27.38	**0.437** 11.10	**0.200** 5.08	**1.062** 26.97	**2.359** 59.92	**30,900** 137.44	**4,800** 21.35	**2.560** 3.81
D88C	**2.609** 66.27	**1.250** 31.75	**0.500** 12.70	**0.250** 6.35	**1.125** 28.58	**2.847** 72.31	**38,000** 169.02	**6,000** 26.69	**3.470** 5.16
D308C	**3.075** 78.11	**1.281** 32.54	**0.625** 15.88	**0.312** 7.92	**1.500** 38.10	**3.188** 80.98	**50,000** 222.40	**8,000** 35.58	**5.630** 8.38

ENGINEERED CLASS "T" BAR CHAIN

This chain is well-suited for conveyor operations where speeds are moderate and constant. Simplicity of design results in a rugged, uncomplicated chain that will work under most hostile conditions. Further, links may be replaced by hand to keep the chain in constant working order, or to shorten or lengthen the chain.

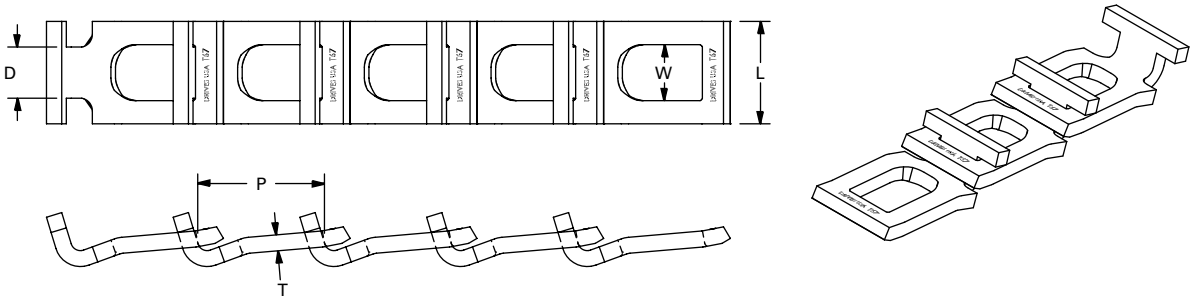

TABLE 132. ENGINEERED CLASS "T" BAR CHAIN

Chain No.	Pitch P	Inside Width W	Tab Width D	Link Plate Thickness T	Overall Width L	Average Tensile Strength	Maximum Recommended Working Load	Weight
	in. mm	**in.** mm	**in.** mm	**in.** mm	**in.** mm	**lbs.** kN	**lbs.** kN	**lbs./ft.** kg/m
T67	**2.550** 64.77	**1.094** 27.79	**1.000** 25.40	**0.312** 7.92	**2.000** 50.80	**16,000** 71.17	**2,285** 10.16	**1.977** 2.94

ENGINEERED CLASS "T" ROD CHAIN

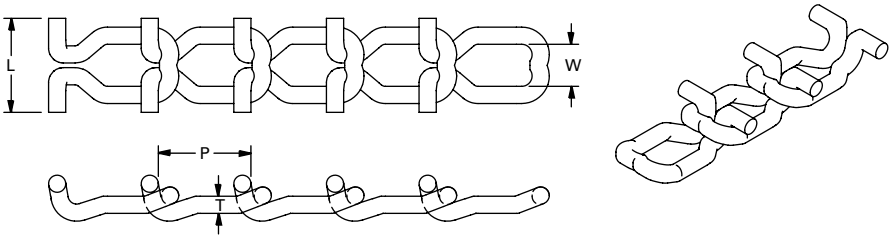

TABLE 133. ENGINEERED CLASS "T" ROD CHAIN

Chain No.	Pitch P	Inside Width W	Rod Thickness T	Overall Width L	Average Tensile Strength	Maximum Recommended Working Load	Weight
	in. mm	**in.** mm	**in.** mm	**in.** mm	**lbs.** kN	**lbs.** kN	**lbs./ft.** kg/m
67 T-Rod	**2.388** 60.66	**1.125** 28.58	**0.437** 11.10	**2.500** 63.50	**16,000** 71.17	**2285.000** 10.16	**2.010** 2.99

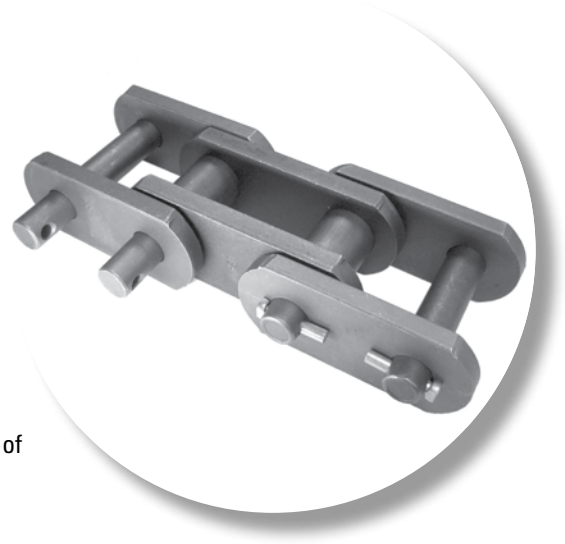

ENGINEERED CLASS CHAIN – BY INDUSTRY

Drives supplies Engineered Class chain to many different industries the following includes a sampling of those industries:

Automotive 138
Material Handling 139
Food Processing. 143
Forest and Paper 147
Metal Processing. 157
Mining Industry 161
Sugar Mill Chain. 163
Agricultural Conveyor Chain Products. 167

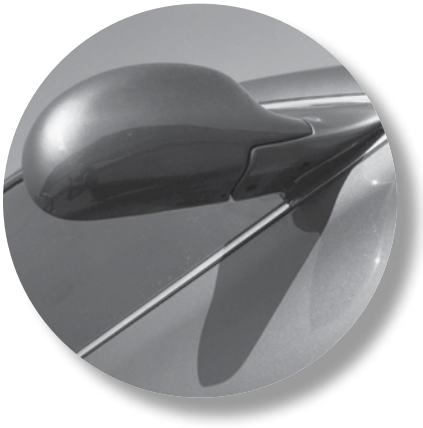





ENGINEERED CLASS CHAIN – BY INDUSTRY
AUTOMOTIVE INDUSTRY

CATERPILLAR DRIVE CHAIN

Drives Caterpillar Drive Chain is essential in driving drop forged chain conveyors. It provides high fatigue life and is designed to perform flawlessly with forged rivetless chains.

Drives Caterpillar Drive Chain features all ballized plates to ensure maximum bearing area for optimum press fits. This improves fatigue life and working loads. We use wide waist link plates with maximized ball heights to improve stress distribution that also increases fatigue strength and reduces vibration.

The use of through-hardened pins that are micro ground and shotpeened provides maximum pin-to-bushing surface contact for extended wear and protection from unpredictable overload. Hardened hook cotters are used to resist shearing and hold their place in the most rigorous applications.

Our one-piece forged drive dog is induction-hardened in the chain contact bearing area for wear resistance. The balance of the drive dog is through-hardened for strength and durability. The entire assembly is designed to operate in combination with the drop forged rivetless chain.

Special hardened hook cotter key comes standard.



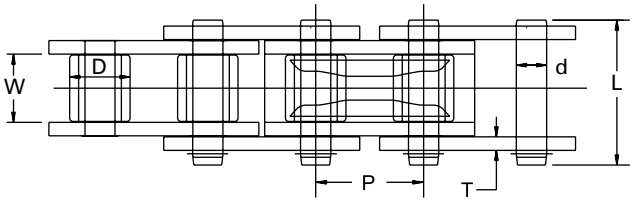

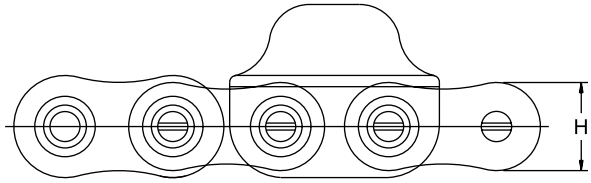

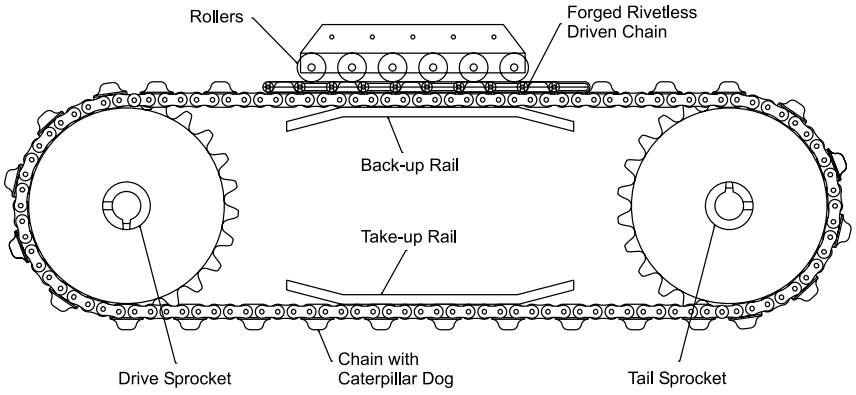

TABLE 134. AUTOMOTIVE INDUSTRY DRIVE CHAIN

Chain No.	Pitch P	Inside Width W	Pin Diameter d	Roller Diameter D	Link Plate Thickness T	Link Plate Height H	Overall Pin Length L	Drive Dog Pitch Spacing	Average Tensile Strength	Maximum Recommended Working Load	Weight
	in. mm	**in.** mm	**in.** mm	**in.** mm	**in.** mm	**in.** mm	**in.** mm		**lbs.** kN	**lbs.** kN	**lbs./ft.** kg/m
160/348	**2.000** 50.80	**1.250** 31.75	**0.563** 14.30	**1.126** 28.60	**0.250** 6.35	**1.899** 48.23	**2.723** 69.16	3rd or 6th	**58,000** 257.98	**9,190** 40.88	**8.300** 12.35
160/458	**2.00** 50.80	**1.250** 31.75	**0.563** 14.30	**1.126** 28.60	**0.250** 6.35	**1.899** 48.23	**2.723** 69.16	4th or 6th	**58,000** 257.98	**9,190** 40.88	**10.00** 14.88
160/678	**2.000** 50.80	**1.250** 31.75	**0.563** 14.30	**1.126** 28.60	**0.250** 6.35	**1.899** 48.23	**2.723** 69.16	6th	**58,000** 257.98	**9,190** 40.88	**9.800** 14.58

MATERIAL HANDLING

Drives material handling chain is commonly found in heavy industrial processes that transfer large storage piles of bulk material.



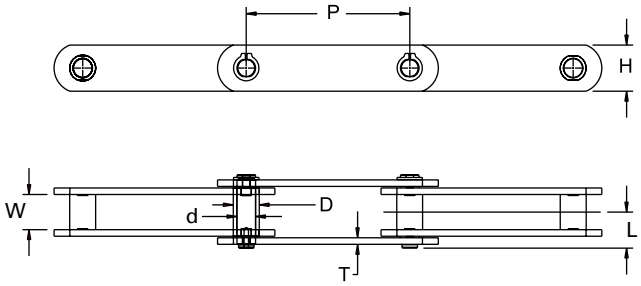

TABLE 135. MATERIAL HANDLING DRIVE CHAIN

Chain No.	Pitch P	Inside Width W	Pin Diameter d	Roller Diameter D	Link Plate Thickness T	Link Plate Height H	Overall Pin Length L	Average Tensile Strength	Maximum Recommended Working Load	Weight
	in. mm	**in.** mm	**in.** mm	**in.** mm	**in.** mm	**in.** mm	**in.** mm	**lbs.** kN	**lbs.** kN	**lbs./ft.** kg/m
D1240	**12.400** 314.96	**2.660** 67.56	**1.410** 35.81	**1.970** 50.04	**0.500** 12.70	**3.500** 88.90	**5.530** 140.46	**190,822** 848.78	**23,223** 103.30	**17.940** 26.70

STACKER RECLAIMERS

Stacker reclaimers are used in heavy industrial processes that transfer large storage piles of bulk material. Reclaimer chain and flight assemblies function like scraper conveyors, with flight blades that push material toward a belt-feeding system. The reclaimer conveyor's chain, with digging flights, is supported by rails and structure that span over or across the pile being reclaimed for transfer to other plant locations.

Drives stacker chain features maximum bearing areas, high hardness and case depths made to provide optimum performance.

Reclaimer chain is manufactured on a made-to-order basis with minimum order quantities. Contact Drives for additional information.

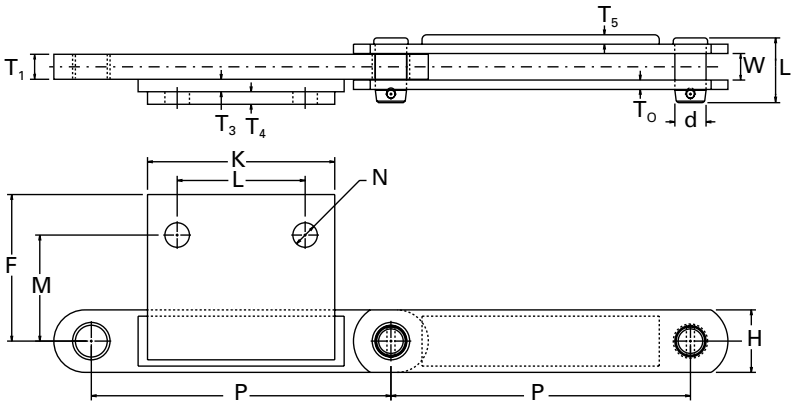

TABLE 136. STACKER RECLAIMER CHAIN

Chain No.	Pitch P	Inside Width W	Pin Diameter d	Outside Link Plate Thickness T_0	Inside Link Plate Thickness T_I	Link Plate Height H	Overall Pin Length L	Average Tensile Strength	Maximum Recommended Working Load	Weight
	in. mm	**in.** mm	**in.** mm	**in.** mm	**in.** mm	**in.** mm	**in.** mm	**lbs.** kN	**lbs.** kN	**lbs./ft.** kg/m
D1201	**12.000** 304.80	**1.062** 26.97	**1.250** 31.75	**0.380** 9.65	**1.000** 25.40	**1.160** 29.46	**2.600** 66.04	**108,000** 480.38	**5,625** 25.02	**12.740** 18.96
D1202	**12.000** 304.80	**1.562** 39.67	**1.500** 38.10	**0.500** 12.70	**1.500** 38.10	**1.590** 40.39	**3.500** 88.90	**170,000** 756.16	**10,125** 45.04	**19.430** 28.92

TABLE 137. STACKER RECLAIMER ATTACHMENT

Chain no.	T_3	T_4	T_5	M	F	K	L	N
	in. mm	**in.** mm	**in.** mm	**in.** mm	**in.** mm	**in.** mm	**in.** mm	**in.** mm
D1201	**0.500** 12.70	**0.500** 12.70	**0.380** 9.65	**4.250** 107.95	**5.875** 149.23	**7.500** 190.50	**5.125** 130.18	**0.980** 24.89
D1202	**0.630** 16.00	**0.500** 12.70	**0.500** 12.70	**4.250** 107.95	**5.875** 149.23	**7.500** 190.50	**5.125** 130.18	**0.980** 24.89

STANDARD ROLLER CONVEYOR CHAIN

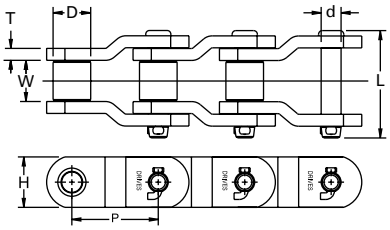

Offset style

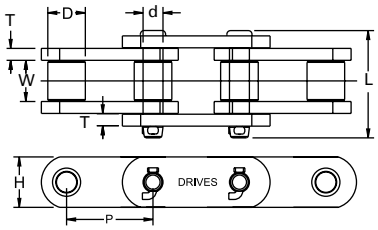

Straight style small roller

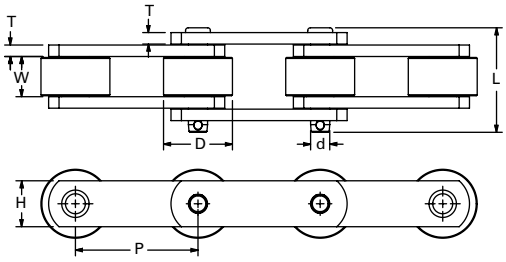

Straight style large roller

TABLE 138. STANDARD ROLLER CONVEYOR CHAIN

Chain No.	Pitch P	Inside Width W	Pin Diameter d	Roller Diameter D	Roller Style	Link Plate Thickness T	Link Plate Height H	Overall Pin Length L	Chain Style	Average Tensile Strength	Maximum Recommended Working Load	Weight
	in. mm	**in.** mm	**in.** mm	**in.** mm		**in.** mm	**in.** mm	**in.** mm		**lbs.** kN	**lbs.** kN	**lbs./ft.** kg/m
378R	**1.654** 42.01	**1.000** 25.40	**0.437** 11.10	**0.875** 22.23	Small	**0.187** 4.75	**1.125** 28.58	**2.280** 57.91	Straight	**13,000** 57.82	**2,100** 9.34	**3.700** 5.51
378RX	**1.654** 42.01	**1.000** 25.40	**0.437** 11.10	**0.875** 22.23	Small	**0.187** 4.75	**1.125** 28.58	**2.280** 57.91	Straight	**20,000** 88.96	**2,100** 9.34	**3.700** 5.51
53R	**3.000** 76.20	**1.000** 25.40	**0.437** 11.10	**1.500** 38.10	Large	**0.187** 4.75	**1.125** 28.58	**2.280** 57.91	Straight	**13,000** 57.82	**2,100** 9.34	**3.900** 5.80
3162	**3.000** 76.20	**1.250** 31.75	**0.562** 14.27	**2.250** 57.15	Large	**0.250** 6.35	**1.500** 38.10	**2.870** 72.90	Straight	**47,000** 209.06	**3,445** 15.32	**7.420** 11.04
88R	**4.000** 101.60	**0.876** 22.25	**0.625** 15.88	**2.000** 50.80	Large	**0.250** 6.35	**1.500** 38.10	**2.468** 62.69	Straight	**25,140** 111.82	**3,000** 13.34	**6.054** 9.01
89R	**4.000** 101.60	**1.312** 33.32	**0.625** 15.88	**2.250** 57.15	Large	**0.375** 9.53	**1.500** 38.10	**3.470** 88.14	Straight	**28,000** 124.54	**4,500** 20.02	**10.600** 15.77
12230	**12.000** 304.80	**4.100** 104.14	**1.500** 38.10	**3.500** 88.90	Small	**0.625** 15.88	**4.000** 101.60	**7.600** 193.04	Offset	**280,000** 1,245.44	**36,300** 161.46	**39.200** 58.34

STAINLESS STEEL BUSHED CONVEYOR CHAIN



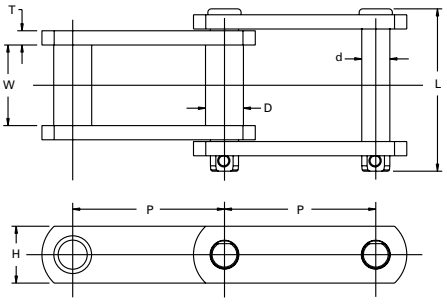

TABLE 139. STAINLESS STEEL BUSHED CONVEYOR CHAIN

Chain No.	Pitch P	Inside Width W	Pin Diameter d	Bushing Diameter D	Link Plate Thickness T	Link Plate Height H	Overall Pin Length L	Maximum Recommended Working Load	Weight
	in. mm	**in.** mm	**in.** mm	**in.** mm	**in.** mm	**in.** mm	**in.** mm	**lbs.** kN	**lbs./ft.** kg/m
188SS	**2.609** 66.27	**1.062** 26.97	**0.500** 12.70	**0.880** 22.35	**0.250** 6.35	**1.125** 28.58	**2.690** 68.33	**1,664** 7.40	**3.600** 5.36
102BSS	**4.000** 101.60	**2.130** 54.10	**0.625** 15.88	**1.000** 25.40	**0.375** 9.53	**1.500** 38.10	**4.310** 109.47	**3,834** 17.05	**6.900** 10.27

STAINLESS WELDED STEEL CHAIN

Drives produces the Stainless Welded Steel Chain for horizontal, incline and vertical conveying applications that operate in corrosive environments. The side bars and barrel are manufactured from 300 series stainless steel material for optimum corrosion resistance. The pins are manufactured from 17-4PH (precipitation hardened) stainless steel. This special pin material provides corrosion resistance and a hard surface to maximize the wear life of the chain.

- Chain numbers WSX124, WSXH124 and WSX132 are made-to-order in stainless steel with riveted or cottered construction with minimum order quantities.
- This stainless steel chain also can be provided with electroless nickel-plated pins for less corrosive environments. Contact Drives engineering for application information.

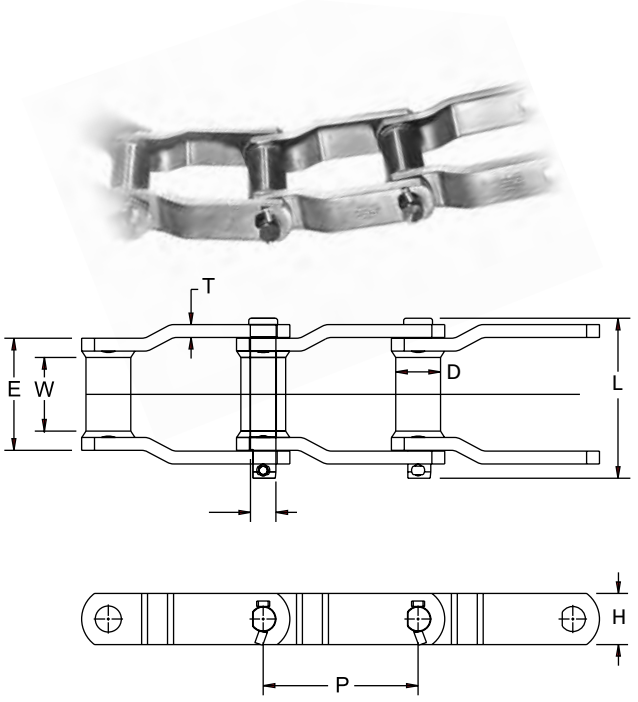

TABLE 140. STAINLESS WELDED STEEL CHAIN

Material: Side plates and barrel are 300ss and pins are 17-4ph										
Chain no.	Pitch P	Inside Width W	Pin Diameter d	Bushing Diameter D	Bushing Length E	Link Plate Thickness T	Link Plate Height H	Overall Pin Length L	Maximum Recommended Working Load	Weight
	in. **mm**	in. **mm**	in. **mm**	in. **mm**	in. **mm**	in. **mm**	in. **mm**	in. **mm**	lbs. kN	lbs./ft. kg/m
WSX78	**2.609** 66.27	**1.120** 28.45	**0.500** 12.70	**0.880** 22.35	**2.010** 51.05	**0.250** 6.35	**1.120** 28.45	**3.340** 84.84	**2,140** 9.52	**4.30** 6.40
WCSX78	**2.609** 66.27	**1.120** 28.45	**0.500** 12.70	**0.880** 22.35	**2.010** 51.05	**0.250** 6.35	**1.120** 28.45	**3.340** 84.84	**2,140** 9.52	**5.00** 7.44
WSX124	**4.000** 101.60	**1.630** 41.40	**0.750** 19.05	**1.250** 31.75	**2.750** 69.85	**0.380** 9.65	**1.500** 38.10	**4.250** 107.95	**4,400** 19.57	**8.00** 11.91
WCSX124	**4.000** 101.60	**1.630** 41.40	**0.750** 19.05	**1.250** 31.75	**2.750** 69.85	**0.380** 9.65	**1.500** 38.10	**4.250** 107.95	**4,400** 19.57	**9.00** 13.39
WSX132	**6.050** 153.67	**2.880** 73.15	**1.000** 25.40	**1.750** 44.45	**4.380** 111.25	**0.500** 12.70	**2.000** 50.80	**6.250** 158.75	**9,330** 41.50	**14.00** 20.83
WCSX132	**6.050** 153.67	**2.880** 73.15	**1.000** 25.40	**1.750** 44.45	**4.380** 111.25	**0.500** 12.70	**2.000** 50.80	**6.250** 158.75	**9,330** 41.50	**15.40** 22.92
WSX157	**6.050** 153.67	**2.750** 69.85	**1.125** 28.58	**1.750** 44.45	**4.670** 118.62	**0.625** 15.88	**2.500** 63.50	**7.060** 179.32	**11,200** 49.82	**20.00** 29.76
WCSX157	**6.050** 153.67	**2.750** 69.85	**1.125** 28.58	**1.750** 44.45	**4.670** 118.62	**0.625** 15.88	**2.500** 63.50	**7.060** 179.32	**11,200** 49.82	**21.20** 31.55
WSX157H	**6.050** 153.67	**3.000** 76.20	**1.125** 28.58	**1.750** 44.45	**4.825** 122.56	**0.750** 19.05	**2.500** 63.50	**7.188** 182.58	**11,500** 51.15	**21.40** 31.85
WCSX157H	**6.050** 153.67	**3.000** 76.20	**1.125** 28.58	**1.750** 44.45	**4.825** 122.56	**0.750** 19.05	**2.500** 63.50	**7.188** 182.58	**11,500** 51.15	**22.40** 33.34

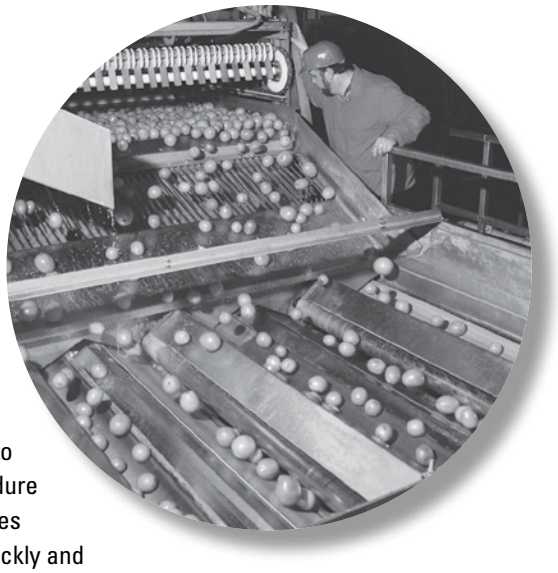

FOOD PROCESSING

Food processing is a large industry with subcategories, and each has special needs and requirements. Some carry heavy loads, some are subjected to high temperatures, and others endure frequent washdowns. Each requires reliable chain to move product quickly and efficiently. The types of chain vary, depending on the application.

FOOD PROCESSING

PROOFER CHAIN

Drives chain is made with high-temperature alloy steel. Component heat treatment and clearances are selected to improve wear life and minimize the risk of stiff joints. Consult Drives engineering for additional application information.

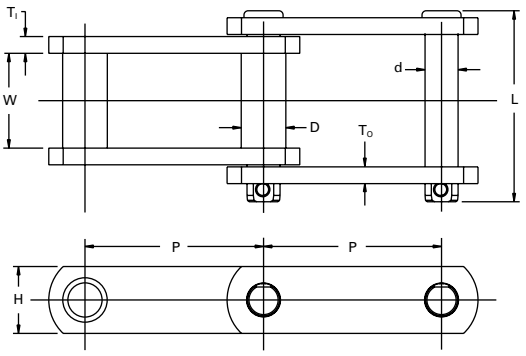

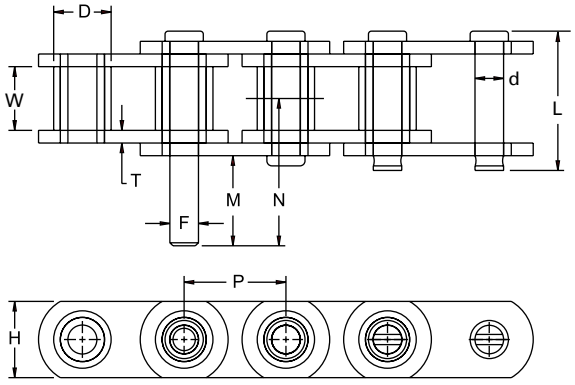

TABLE 141. PROOFER CHAIN

Chain No.	Pitch P	Inside Width W	Pin Diameter d	Roller Diameter D	Roller Face Width F	Outside Link Plate T_O	Inside Link Plate T_I	Link Plate Height H	Overall Pin Length L	Average Tensile Strength	Maximum Recommended Working Load	Weight
	in. mm	**in.** mm	**in.** mm	**in.** mm	**in.** mm	**in.** mm	**in.** mm	**in.** mm	**in.** mm	**lbs.** kN	**lbs.** kN	**lbs./ft.** kg/m
D20002	**2.000** 50.80	**1.250** 31.75	**0.560** 14.22	**1.121** 28.47	– –	**0.250** 6.35	**0.250** 6.35	**1.500** 38.10	**2.810** 71.37	**21,000** 93.41	**3,500** 15.57	**6.200** 9.23
102BSS (304SS)	**4.000** 101.60	**2.130** 54.10	**0.625** 15.88	**1.000** 25.40	**1.000*** 25.40	**0.375** 9.53	**0.375** 9.53	**1.500** 38.10	**4.310** 109.47	– –	**3,834** 17.05	**6.900** 10.27

* Bushing diameter.

TABLE 142.
PROOFER CHAIN ATTACHMENTS

Chain No.	Pin Diameter F	Pin Length M	Pin Length N
	in. mm	**in.** mm	**in.** mm
D20002	**0.570** 14.48	**1.750** 44.45	**2.910** 73.91

OVEN CHAIN

Drives oven chain is comprised of specially designed 300 series sidebars with 17-4PH (precipitation hardened) pin, bushing and roller. The combination of material, in conjunction with increased clearances, allows this chain to handle the high temperatures and corrosive environment of an oven.

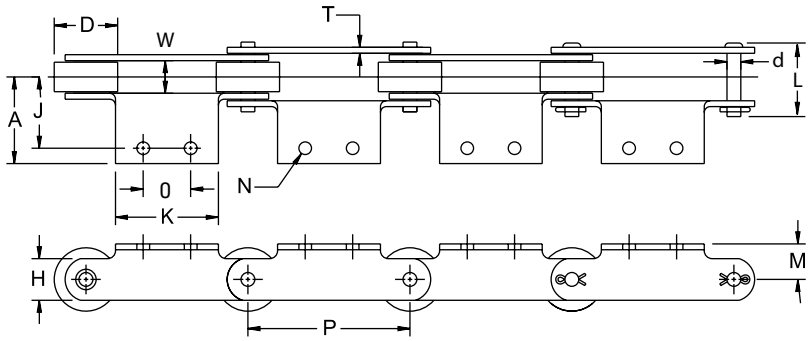

TABLE 143. STAINLESS STEEL ROLLER CONVEYOR CHAIN

Material: Side plates are 300SS and round parts are 17-4PH

Chain No.	Pitch P	Inside Width W	Pin Dia. d	Roller Dia. D	Roller Style	Outside Link Plate T	Link Plate Height H	Overall Pin Length L	Chain Style	Maximum Recommended Working Load	Weight
	in. mm	**in.** mm	**in.** mm	**in.** mm		**in.** mm	**in.** mm	**in.** mm		**lbs.** kN	**lbs./ft.** kg/m
D3625	**3.625** 92.08	**1.030** 26.16	**0.440** 11.18	**1.750** 44.45	Large	**0.190** 4.83	**1.310** 33.27	**2.330** 59.18	Straight	**1,318** 5.86	**5.420** 8.07
D4375	**4.375** 111.13	**1.300** 33.02	**0.440** 11.18	**2.000** 50.80	Large	**0.190** 4.83	**1.310** 33.27	**2.330** 59.18	Straight	**1,300** 5.78	**5.050** 7.52
D5125 w/1.75" Roller	**5.125** 130.18	**1.300** 33.02	**0.440** 11.18	**1.750** 44.45	Large	**0.190** 4.83	**1.310** 33.27	**2.330** 59.18	Straight	**1,318** 5.86	**4.800** 7.14
D5125 w/2.0" Roller	**5.125** 130.18	**1.300** 33.02	**0.440** 11.18	**2.000** 50.80	Large	**0.190** 4.83	**1.310** 33.27	**2.330** 59.18	Straight	**1,318** 5.86	**5.350** 7.96
D5125 w/2.25" Roller	**5.125** 130.18	**1.300** 33.02	**0.440** 11.18	**2.250** 57.15	Large	**0.190** 4.83	**1.310** 33.27	**2.330** 59.18	Straight	**1,318** 5.86	**4.800** 7.14

TABLE 144. A2 ATTACHMENT SPECIFICATIONS

Chain No.	A	J	K	O	M	N
	in. mm	**in.** mm	**in.** mm	**in.** mm	**in.** mm	**in.** mm
D3625	**1.930** 49.02	**1.380** 35.05	**3.000** 76.20	**1.500** 38.10	**1.130** 28.70	**0.400** 10.16
D4375	**1.030** 26.16	**0.440** 11.18	**2.000** 50.80	**0.190** 4.83	**1.310** 33.27	**0.400** 10.16
D5125 w/1.75" Roller	**2.740** 69.60	**2.250** 57.15	**3.250** 82.55	**1.500** 38.10	**1.130** 28.70	**0.400** 10.16
D5125 w/2.0" Roller	**2.740** 69.60	**2.250** 57.15	**3.250** 82.55	**1.500** 38.10	**1.130** 28.70	**0.400** 10.16
D5125 w/2.25" Roller	**2.740** 69.60	**2.250** 57.15	**3.250** 82.55	**1.500** 38.10	**1.130** 28.70	**0.400** 10.16



FOREST AND PAPER INDUSTRY

Drives produces industry leading Engineered Class conveyor chains for the forest and paper industry. These tough applications require chains that are built to the strictest quality standards ever established. Drives' advanced engineering knowledge and experience ensures maximum strength and performance while setting the standard for quality in this industry.

FOREST AND PAPER INDUSTRY

81X CHAIN

- Manufactured with premium quality alloy steels.
- Heat treated and tempered for extended service life.

Solid Rollers

- Smoother engagement with sprockets.
- Rollers rotate freely reducing pulsation in conveyors.

Curled Bushings

- Drives' new computer controlled curling equipment provides a high quality concentric bushing.
- These bushings allow for minimum initial wear.

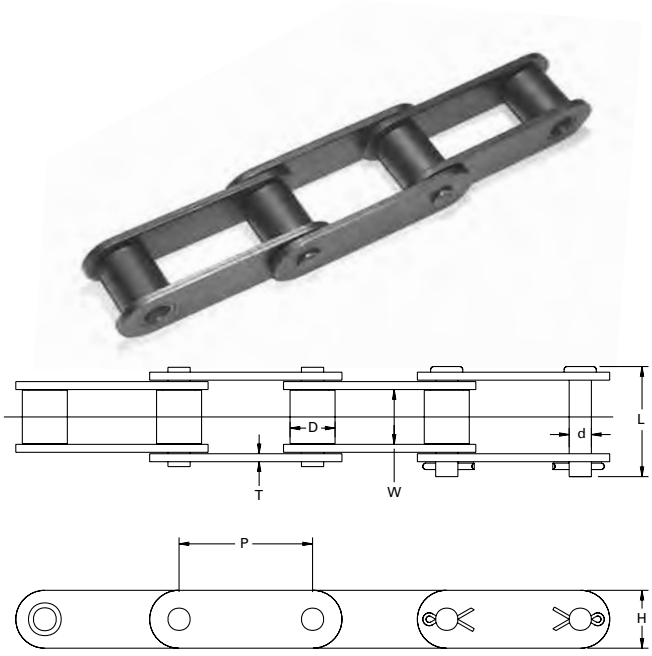

TABLE 145. 81X ROLLER CONVEYOR CHAIN

Chain No.	Pitch P	Inside Width W	Pin Diameter d	Roller Diameter D	Link Plate Thickness T	Link Plate Height H	Overall Pin Length L	Average Tensile Strength	Maximum Recommended Working Load	Weight
	in. mm	**in.** mm	**in.** mm	**in.** mm	**in.** mm	**in.** mm	**in.** mm	**lbs.** kN	**lbs.** kN	**lbs./ft.** kg/m
81X	**2.609** 66.27	**1.060** 26.92	**0.437** 11.10	**0.906** 23.01	**0.155** 3.94	**1.125** 28.58	**1.930** 49.02	**24,000** 106.75	**3,000** 13.34	**2.500** 3.72
81X DFC	**2.609** 66.27	**1.060** 26.92	**0.437** 11.10	**0.906** 23.01	**0.155** 3.94	**1.125** 28.58	**1.930** 49.02	**24,000** 106.75	**3,000** 13.34	**2.500** 3.72

81X EXTENDED LIFE DFC SERIES

DFC hard-chrome-plated pins possess standard steel's metallurgical properties for toughness and strength while delivering an extremely hard wear-resistant pin surface. DFC chain pins resist wear longer than standard heat-treated pins, even in dry and abrasive environments.

- The chain bushing has a baked on dry-film lubricant. This gives the chain joint a lubricating film in the bearing area.
- Outstanding wear and shock load performance at the same temperature ranges as standard carbon steel chain.
- No reduction in working loads or operating speeds.
- Exceptional pin wear resistance, in conjunction with the dry-film lubricant on the bushing, reduces chain elongation and can increase wear life up to three times over conventional premium chains under like conditions.

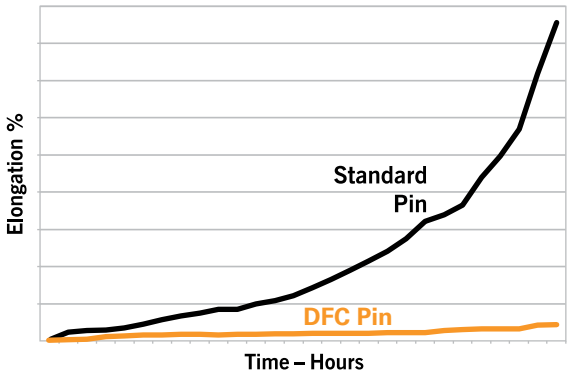

Fig. 49. Elongation vs. time.

81XH, 81XHT, 81XHH CHAIN

Heavier Sidebars

- 23 percent more bearing surface for conveying product.
- Increased sidebar thickness on the roller link plate allows for welding to the inner link plate.

Through-Hardened Pins

- 20 percent higher tensile strength and resists bending under high shock loads.

Solid Rollers

- Smoother engagement with sprockets.
- Rollers rotate freely reducing pulsation in conveyors.



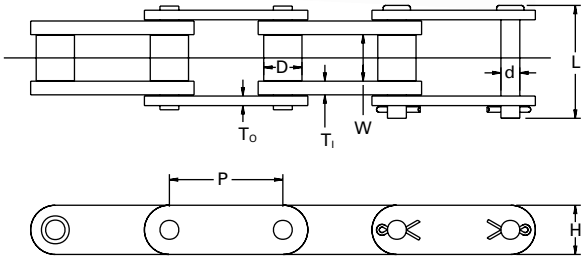

TABLE 146. 81X HEAVY SERIES ROLLER CONVEYOR CHAIN

Chain No.	Pitch P	Inside Width W	Pin Diameter d	Roller Diameter D	Outside Link Plate T_o	Inside Link Plate T_i	Link Plate Height H	Overall Pin Length L	Average Tensile Strength	Maximum Recommended Working Load	Weight
	in. mm	**in.** mm	**in.** mm	**in.** mm	**in.** mm	**in.** mm	**in.** mm	**in.** mm	**lbs.** kN	**lbs.** kN	**lbs./ft.** kg/m
81XH	**2.609** 66.27	**1.060** 26.92	**0.437** 11.10	**0.906** 23.01	**0.220** 5.59	**0.310** 7.87	**1.332** 33.83	**2.577** 65.46	**42,000** 186.82	**3,700** 16.46	**4.120** 6.13
81XHT	**2.609** 66.27	**1.060** 26.92	**0.437** 11.10	**0.906** 23.01	**0.220** 5.59	**0.220** 5.59	**1.125** 28.58	**2.577** 65.46	**34,000** 151.23	**3,300** 14.68	**3.800** 5.66
81XHH	**2.609** 66.27	**1.060** 26.92	**0.437** 11.10	**0.906** 23.01	**0.310** 7.87	**0.310** 7.87	**1.332** 33.83	**2.763** 70.18	**42,000** 186.82	**3,700** 16.46	**4.600** 6.85

3939 (8.000 PITCH)

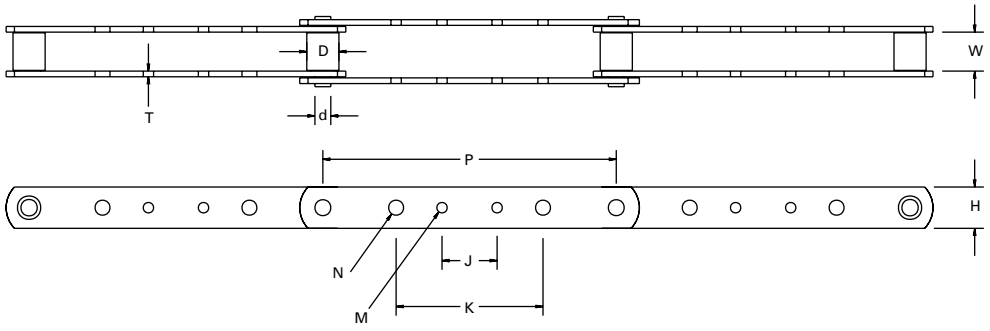

TABLE 147. 3939 ROLLER CONVEYOR CHAIN

Chain No.	Pitch P	Inside Width W	Pin Diameter d	Roller Diameter D	Link Plate Thickness T	Link Plate Height H	Overall Pin Length L	Average Tensile Strength	Maximum Recommended Working Load	Weight
	in. mm	**in.** mm	**in.** mm	**in.** mm	**in.** mm	**in.** mm	**in.** mm	**lbs.** kN	**lbs.** kN	**lbs./ft.** kg/m
3939	**8.000** 203.20	**1.060** 26.92	**0.432** 10.97	**0.906** 23.01	**0.155** 3.94	**1.125** 28.58	**1.930** 49.02	**24,000** 106.75	**3,000** 13.34	**1.550** 2.31

TABLE 148. 3939 ATTACHMENT DIMENSIONS

Chain No.	J	K	M	N
	in. mm	**in.** mm	**in.** mm	**in.** mm
3939-B4	**1.500** 38.10	**4.000** 101.60	**0.281** 7.14	**0.281** 7.14
3939-B23	– –	**3.625** 92.08	– –	**0.406** 10.31
3939-B24	– –	**4.000** 101.60	– –	**0.281** 7.14
3939-B40	– –	**4.000** 101.60	– –	**0.406** 10.31
3939-B43	**2.000** 50.80	**3.625** 92.08	**0.343** 8.71	**0.406** 10.31
3939-B44	**1.500** 38.10	**4.000** 101.60	**0.281** 7.14	**0.406** 10.31

81X ATTACHMENTS

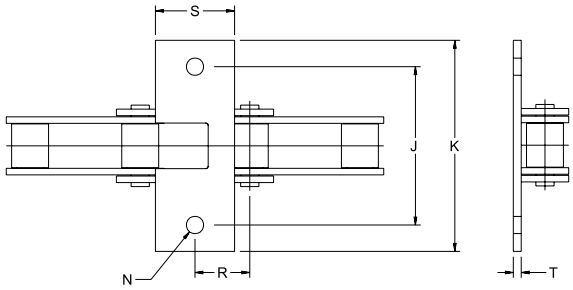

TABLE 149. K1C 81X ATTACHMENT

Attachment	Chain No.	J	K	M	N	M	N
		in. mm	**in.** mm	**in.** mm	**in.** mm	**in.** mm	**in.** mm
K1C	81X	**3.750** 95.25	**5.000** 127.00	**0.406** 10.31	**1.300** 33.02	**1.875** 47.63	**0.187** 4.75

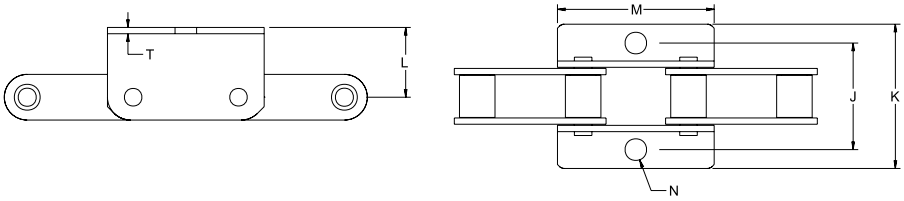

TABLE 150. K3 81X ATTACHMENT

Attachment	Chain No.	J	K	M	N	M	N
		in. mm	**in.** mm	**in.** mm	**in.** mm	**in.** mm	**in.** mm
K3	81X	**2.625** 66.68	**3.500** 88.90	**0.531** 13.49	**1.718** 43.64	**3.860** 98.04	**0.155** 3.94

81X ATTACHMENTS – *continued*

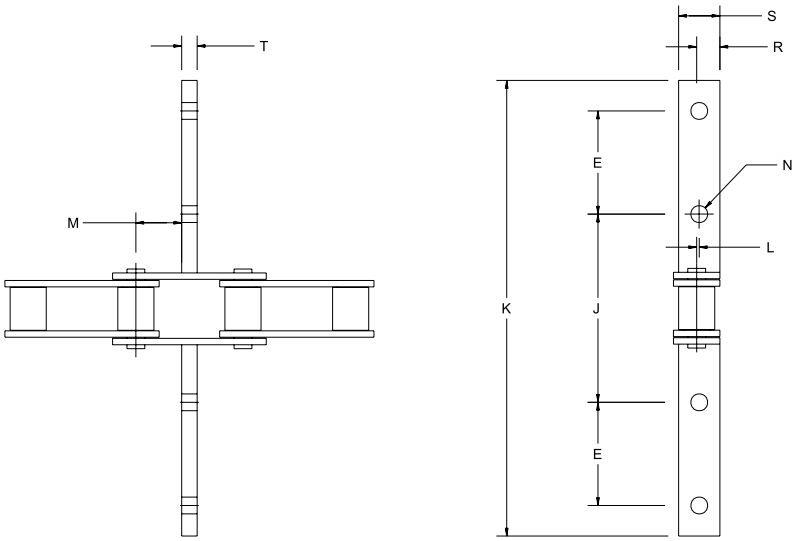

TABLE 151. FS7, FG9, SF22 81X ATTACHMENT

Attachment	Chain No.	J	K	E	N	S	R	L	T	M
		in. mm	**in.** mm	**in.** mm	**in.** mm	**in.** mm	**in.** mm	**in.** mm	**in.** mm	**in.** mm
FS1	81X	**3.000** 76.20	**7.000** 177.80	**1.250** 31.75	**0.406** 10.31	**0.750** 19.05	**0.375** 9.53	**0.188** 4.78	**0.375** 9.53	**1.110** 28.19
FG9	81X	**3.50** 88.90	**7.25** 184.15	**1.25** 31.75	**0.34** 8.71	**1.13** 28.58	**0.56** 14.30	– –	**0.250** 6.35	**1.187** 30.15
SF22	81X	**4.560** 115.82	**11.040** 280.42	**2.500** 63.50	**0.406** 10.31	**1.000** 25.40	**0.500** 12.70	– –	**0.375** 9.53	**1.110** 28.19

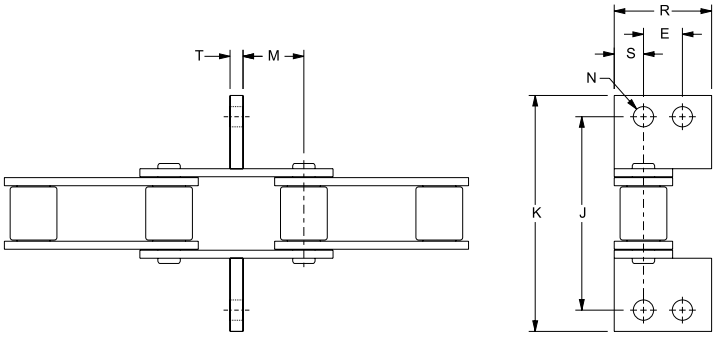

TABLE 152. GT22 81X ATTACHMENT

Attachment	Chain No.	J	K	E	N	S	R	T	M
		in. mm	**in.** mm	**in.** mm	**in.** mm	**in.** mm	**in.** mm	**in.** mm	**in.** mm
GT22	81X	**3.750** 95.25	**4.562** 115.87	**0.750** 19.05	**0.375** 9.53	**0.562** 14.27	**1.875** 47.63	**0.250** 6.35	**1.170** 29.72

81X ATTACHMENTS – *continued*

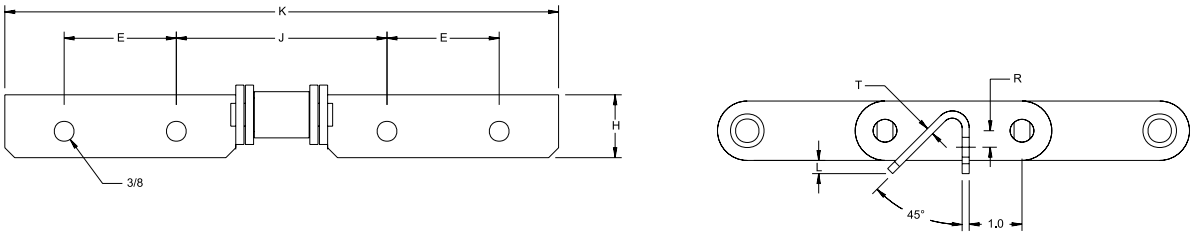

TABLE 153. SF1 AND SF1M1 FOR 81X

Attachment	Chain No.	J	K	E	T	R	H	L
		in. mm	**in.** mm	**in.** mm	**in.** mm	**in.** mm	**in.** mm	**in.** mm
SF1	81X	**3.990** 101.35	**10.490** 266.45	**2.125** 53.98	**0.134** 3.40	**0.313** 7.95	**1.191** 30.25	**0.250** 6.35
SF1M1	81X	**3.990** 101.35	**13.490** 342.65	**3.625** 92.08	**0.134** 3.40	**0.188** 4.78	**1.063** 27.00	– –

NOTE: Attachment available only on pin link.

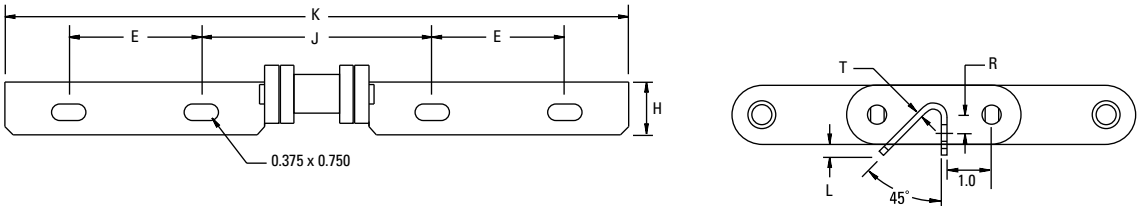

TABLE 154. SF1 FOR 81XHH AND SF1A FOR 81X

Attachment	Chain No.	J	K	E	T	R	H	L
		in. mm	**in.** mm	**in.** mm	**in.** mm	**in.** mm	**in.** mm	**in.** mm
SF1	81XHH	**5.250** 133.35	**14.128** 358.85	**3.000** 76.20	**0.134** 3.40	**0.416** 10.57	**1.191** 30.25	**0.250** 6.35
SF1A	81X	**5.250** 133.35	**14.125** 358.78	**3.000** 76.20	**0.134** 3.40	**0.313** 7.95	**1.191** 30.25	**0.250** 6.35

NOTE: Attachment available only on pin link.

BOARD HANDLING CHAIN

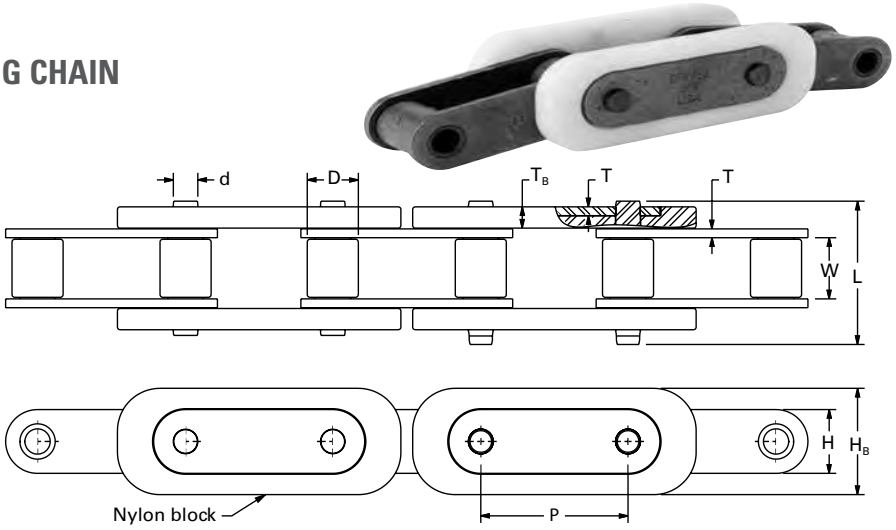

TABLE 155. BOARD HANDLING CHAIN

Chain No.	Pitch P	Inside Width W	Pin Diameter d	Roller Diameter D	Link Plate Thickness T	Link Plate Height H	Overall Pin Length L	Plastic Block Thickness T_B	Plastic Block Height H_B
	in. mm	**in.** mm	**in.** mm	**in.** mm	**in.** mm	**in.** mm	**in.** mm	**in.** mm	**in.** mm
81XBH	**2.609** 66.27	**1.060** 26.92	**0.437** 11.10	**0.906** 23.01	**0.155** 3.94	**1.125** 28.58	**2.370** 60.20	**0.375** 9.53	**1.875** 47.63

SAMPLE OF SPECIAL 81X PUSHER ATTACHMENTS AVAILABLE UPON REQUEST.



KILN DRYER CHAINS

81X KD

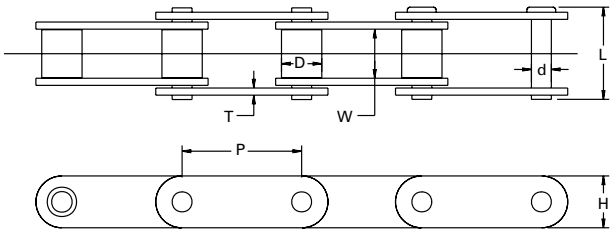



TABLE 156. 81X KD

Chain No.	Pitch P	Inside Width W	Pin Diameter d	Roller Diameter D	Link Plate Thickness T	Link Plate Height H	Overall Pin length L	Average Tensile Strength	Maximum Recommended Working Load	Weight
	in. mm	**in.** mm	**in.** mm	**in.** mm	**in.** mm	**in.** mm	**in.** mm	**lbs.** kN	**lbs.** kN	**lbs./ft.** kg/m
81XKD	**2.609** 66.27	**1.060** 26.92	**0.437** 11.10	**0.906** 23.01	**0.155** 3.94	**1.125** 28.58	**1.930** 49.02	**24,000** 106.75	**3,000** 13.34	**2.500** 3.72

81XH KD

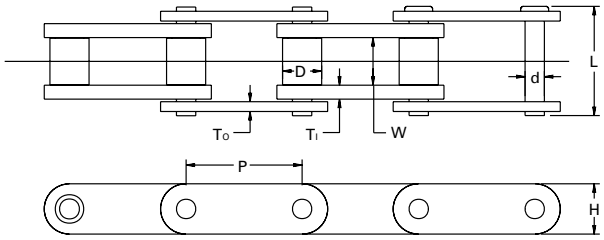



TABLE 157. 81XH KD

Chain No.	Pitch P	Inside Width W	Pin Diameter d	Roller Diameter D	Outside Link Plate T_o	Inside Link Plate T_i	Link Plate Height H	Overall Pin Length L	Average Tensile Strength	Maximum Recommended Working Load	Weight
	in. mm	**in.** mm	**in.** mm	**in.** mm	**in.** mm	**in.** mm	**in.** mm	**in.** mm	**lbs.** kN	**lbs.** kN	**lbs./ft.** kg/m
81XHKD	**2.609** 66.27	**1.060** 26.92	**0.437** 11.10	**0.906** 23.01	**0.220** 5.59	**0.310** 7.87	**1.332** 33.83	**2.577** 65.46	**42,000** 186.82	**3,700** 16.46	**4.120** 6.13

378RX

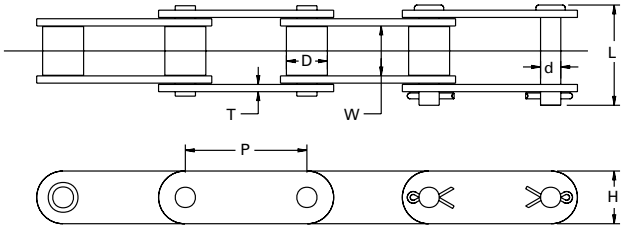



TABLE 158. 378RX

Chain No.	Pitch P	Inside Width W	Pin Diameter d	Roller Diameter D	Link Plate Thickness T	Link Plate Height H	Overall Pin Length L	Average Tensile Strength	Maximum Recommended Working Load	Weight
	in. mm	**in.** mm	**in.** mm	**in.** mm	**in.** mm	**in.** mm	**in.** mm	**lbs.** kN	**lbs.** kN	**lbs./ft.** kg/m
378RX	**1.654** 42.01	**1.000** 25.40	**0.437** 11.10	**0.875** 22.23	**0.187** 4.75	**1.125** 28.58	**2.280** 57.91	**20,000** 88.96	**2,100** 9.34	**3.700** 5.51

Note: KD series manufactured with increased clearance between sidebars to prevent stiff joints under elevated temperatures. Special no-stain lubricants available.

3000H KD

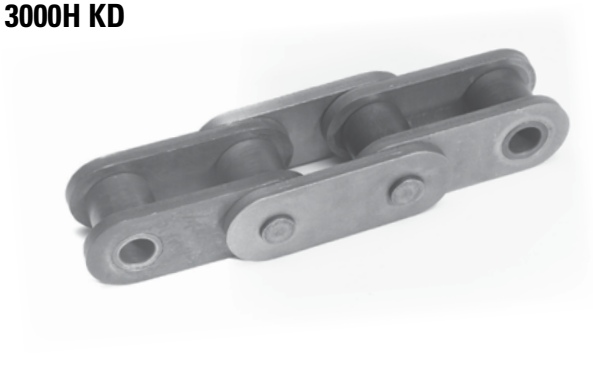

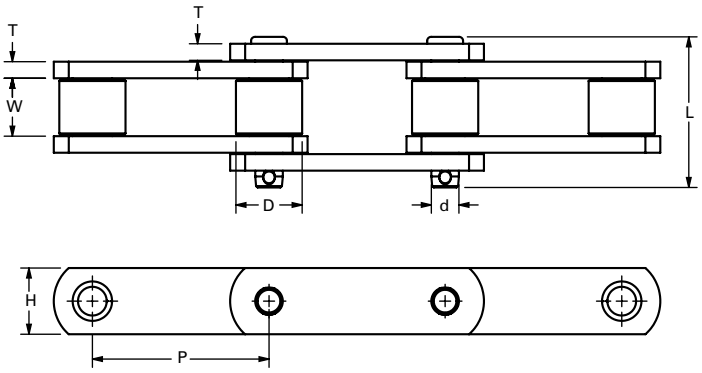

TABLE 159. 3000H KD

Chain No.	Pitch P	Inside Width W	Pin Diameter d	Roller Diameter D	Link Plate Thickness T	Link Plate Height H	Overall Pin Length L	Average Tensile Strength	Maximum Recommended Working Load	Weight
	in. mm	**in.** mm	**in.** mm	**in.** mm	**in.** mm	**in.** mm	**in.** mm	**lbs.** kN	**lbs.** kN	**lbs./ft.** kg/m
3000HKD	**3.000** 76.20	**1.312** 33.32	**0.750** 19.05	**1.500** 38.10	**0.375** 9.53	**2.000** 50.80	**3.220** 81.79	**70,000** 311.36	**7,100** 31.58	**10.700** 15.92

Note: KD series manufactured with increased clearance between sidebars to prevent stiff joints under elevated temperatures. Special no-stain lubricants available.

KILN DRYER SERIES CHAIN

Technical Specification/Performance

KD series chain is produced with the following features:

- Minimum twist in each direction is 4 degrees and the maximum difference in twist from one side to the other is 12 degrees.
- Minimum camber in each direction is 2 in. and the maximum difference in camber from one side to the other is 4 in.
- Special alloy pin material with nominal hardness at 45 HRc (provides strength in higher temperature operations and greater wear life performance) for wallboard/dryer applications.
- Alloy bushing material (provides strength, durability and wear life) for wallboard/dryer applications.
- Nominal lateral plate clearance at 0.06 in. (with increased pin length requirement) provides tolerance for heat expansion/ contraction and accommodates for misalignment of the hangers. Delivers non-binding chain operations in higher temperatures/ longer cycle wall board systems.
- KD series manufactured with increased clearance between sidebars to prevent stiff joints under elevated temperatures. Special rust inhibitors available.

Installation/ Service Factors

- J-style designed connectors can be specified for superior retention and service access.
- 25 ft. or 50 ft. coils available, on pallets/crates for efficient installation.
- No hassle, non-return reels available:
  - 200 foot for 81X or 81XKD
  - 125 foot for 81XH, 81XHT, 81XHKD
- Steel returnable reels available:
  - 600 foot for 81X or 81XKD
  - 500 foot for 81XH, 81XHT, 81XHKD



METAL PROCESSING

Extreme conditions within the metal processing industry demand chains that are designed to withstand the enormous weight of the materials being conveyed, high temperatures and the distance that the material must be conveyed.

METAL PROCESSING CHAIN

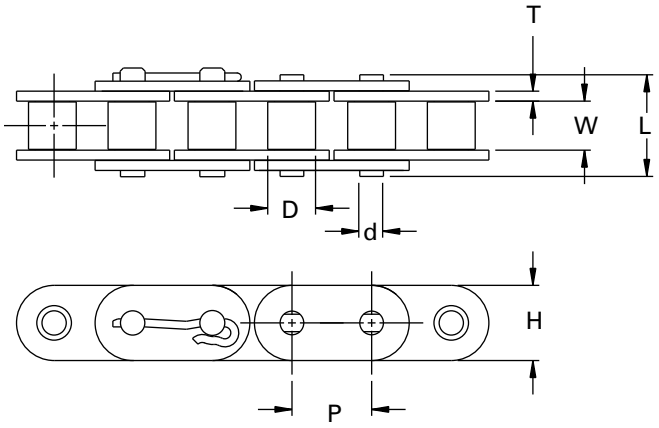

TABLE 160. E-SERIES CHAIN

Chain No.	Pitch P	Inside Width W	Pin Diameter d	Roller Diameter D	Link Plate Thickness T	Link Plate Height H	Overall Pin Length L	Average Tensile Strength	Maximum Recommended Working Load	Weight
	in. mm	**in.** mm	**in.** mm	**in.** mm	**in.** mm	**in.** mm	**in.** mm	**lbs.** kN	**lbs.** kN	**lbs./ft.** kg/m
C60E	**0.750** 19.05	**0.500** 12.70	**0.234** 5.94	**0.469** 11.91	**0.094** 2.39	**0.705** 17.91	**0.996** 25.30	**8500.00** 37.81	**2095.00** 9.32	**1.173** 1.75
C80E	**1.000** 25.40	**0.627** 15.93	**0.312** 7.92	**0.625** 15.88	**0.125** 3.18	**0.943** 23.95	**1.283** 32.59	**14500.00** 64.50	**3300.00** 14.68	**2.054** 3.06
C100E	**1.250** 31.75	**0.755** 19.18	**0.375** 9.53	**0.750** 19.05	**0.156** 3.96	**1.180** 29.97	**1.595** 40.51	**24000.00** 106.75	**5100.00** 22.68	**3.081** 4.59
C120E	**1.500** 38.10	**1.000** 25.40	**0.437** 11.10	**0.875** 22.23	**0.187** 4.75	**1.425** 36.20	**1.955** 49.66	**34000.00** 151.23	**6800.00** 30.25	**4.588** 6.83
C140E	**1.750** 44.45	**1.000** 25.40	**0.500** 12.70	**1.000** 25.40	**0.220** 5.59	**1.663** 42.24	**2.136** 54.25	**46000.00** 204.61	**9000.00** 40.03	**5.878** 8.75
C160E	**2.000** 50.80	**1.250** 31.75	**0.563** 14.30	**1.126** 28.60	**0.252** 6.40	**1.899** 48.23	**2.538** 64.47	**58000.00** 257.98	**12000.00** 53.38	**7.787** 11.59

METAL PIN TRANSFER CHAIN

3162 TP

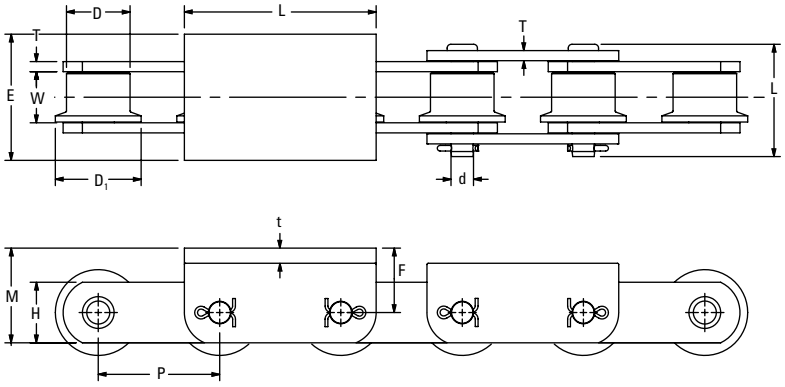



TABLE 161. METAL PIN TRANSFER CHAIN

Chain No.	Pitch P	Inside Width W	Pin Diameter d	Roller Diameter D	Roller Face Width F	Roller Style	Link Plate Thickness T	Link Plate Height H	Overall Pin Length L	Average Tensile Strength	Maximum Recommended Working Load	Weight
	in. mm	**in.** mm	**in.** mm	**in.** mm	**in.** mm	**in.** mm	**in.** mm	**in.** mm	**in.** mm	**lbs.** kN	**lbs.** kN	**lbs./ft.** kg/m
3162	**3.000** 76.20	**1.250** 31.75	**0.560** 14.22	**1.575** 40.01	**0.953** 24.21	Flange	**0.250** 6.35	**1.500** 38.10	**2.870** 72.90	**47,000** 209.06	**3,445** 15.32	**11.810** 17.58

TABLE 162. METAL PIN TRANSFER CHAIN ATTACHMENT

Attachment	Chain No.	t	M	P	L
		in. mm	**in.** mm	**in.** mm	**in.** mm
TP	3162	**0.380** 9.65	**1.600** 40.64	**3.130** 79.50	**4.750** 120.65



MINING INDUSTRY

Drives manufactures mining chains that take into consideration the harsh mining environment above ground or underground. Drives mining chains are built to precise specifications for strength and maximum wear life.

MINING INDUSTRY

FEEDER BREAKER CHAIN



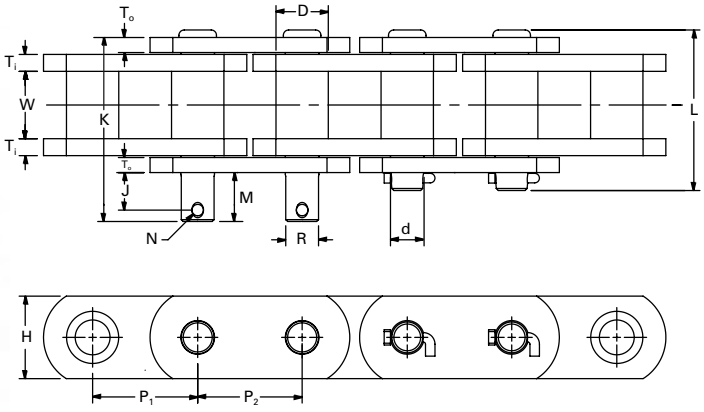

TABLE 163. FEEDER BREAKER CHAIN

Chain No.	Pitch P_1	Pitch P_2	Inside Width W	Pin Diameter d	Bushing Diameter F	Outside Link Plate T_0	Inside Link Plate T_I	Link Plate Height H	Overall Pin Length L	Average Tensile Strength	Maximum Recommended Working Load	Weight
	in. mm	**in.** mm	**in.** mm	**in.** mm	**in.** mm	**in.** mm	**in.** mm	**in.** mm	**in.** mm	**lbs.** kN	**lbs.** kN	**lbs./ft.** kg/m
3X4 Feeder Breaker Chain	**3.000** 76.20	**4.000** 101.60	**1.880** 47.75	**0.990** 25.15	**1.500** 38.10	**0.500** 12.70	**0.560** 14.22	**2.500** 63.50	**5.000** 127.00	**170,000** 756.16	**13,433** 59.75	**19.570** 29.12
4X4 Feeder Breaker Chain	**4.000** 101.60	**4.000** 101.60	**1.880** 47.75	**0.990** 25.15	**1.500** 38.10	**0.500** 12.70	**0.560** 14.22	**2.500** 63.50	**5.000** 127.00	**170,000** 756.16	**13,433** 59.75	**20.170** 30.02
3501	**3.500** 88.90	**3.500** 88.90	**2.250** 57.15	**1.120** 28.45	**1.750** 44.45	**0.500** 12.70	**0.560** 14.22	**2.750** 69.85	**5.410** 137.41	**170,000** 756.16	**17,000** 75.62	**24.300** 36.16
3751	**3.750** 95.25	**3.750** 95.25	**2.250** 57.15	**1.120** 28.45	**1.750** 44.45	**0.500** 12.70	**0.560** 14.22	**2.750** 69.85	**5.410** 137.41	**170,000** 756.16	**17,000** 75.62	**24.960** 37.15

TABLE 164. FEEDER BREAKER CHAIN ATTACHMENT

Chain No.	J	M	K	N	R
	in. mm	**in.** mm	**in.** mm	**in.** mm	**in.** mm
3X4 Feeder Breaker Chain	**1.120** 28.45	**1.500** 38.10	**5.580** 141.73	**0.928** 23.57	**0.377** 9.58
4X4 Feeder Breaker Chain	**1.120** 28.45	**1.500** 38.10	**5.580** 141.73	**0.928** 23.57	**0.377** 9.58
3501	**1.250** 31.75	**1.610** 40.89	**6.130** 155.70	**1.090** 27.69	**0.377** 9.58
3751	**1.750** 44.45	**2.110** 53.59	**6.680** 169.67	**1.090** 27.69	**0.377** 9.58

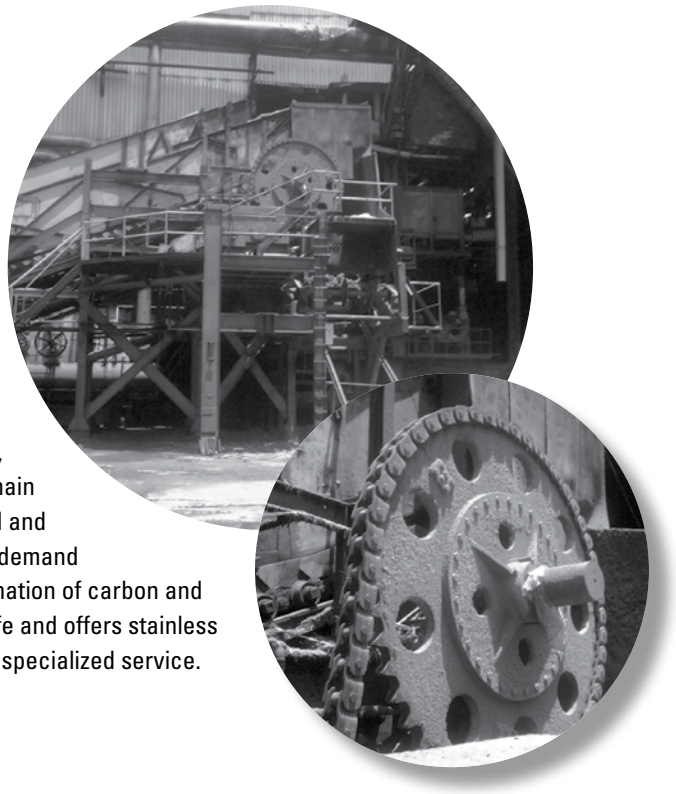

SUGAR MILL CHAIN

Sugar mills provide a rugged test for chains as they convey the cane through the refining process. Drives produces several chains for this challenging application, including roller conveyor chain, bagasse carrier chain, main cane carrier chain and drive chain. Drives chains are designed and engineered for top performance in the 24/7 demand of the harvest season. Drives uses a combination of carbon and alloy steels to achieve the optimum chain life and offers stainless steel, chrome plating, and nickel plating for specialized service.

SUGAR MILL CHAIN

Drives chain components are heat treated in modern furnaces that are controlled by PLC (Programmable Logic Controllers) technology in Fulton, Ill. Drives not only performs standard hardness tests, but also bending and crush tests to ensure that all parts have the proper balance of strength and ductility.

To achieve the proper press fits, Drives utilizes state-of- the-art manufacturing processes and in-house tooling designers to ensure round holes with maximum contact between mating surfaces. Drives precision assembly equipment is used to manufacture the chain with equal twist and camber so the chain will run straight and true. Drives' advanced quality assurance processes verify that the chains are equal to or exceed ANSI standards, assuring that you, our customers, have an industry leading chain available for your application.



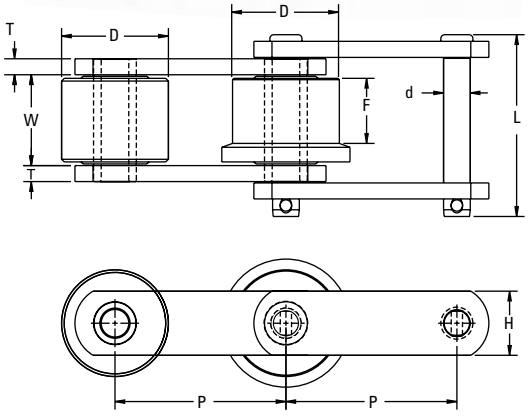

Straight style large roller

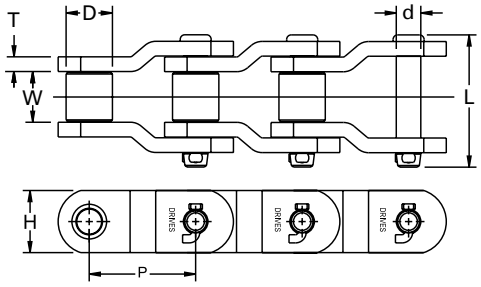

Offset style

TABLE 165. SUGAR MILL CHAIN

Chain No.	Pitch P	Inside Width W	Pin Diameter d	Roller Diameter D	Roller Face Width F	Roller Style	Link Plate Thickness T	Link Plate Height H	Overall Pin Length L	Chain Style	Average Tensile Strength	Maximum Recommended Working Load	Weight
	in. mm	**in.** mm	**in.** mm	**in.** mm	**in.** mm		**in.** mm	**in.** mm	**in.** mm		**lbs.** kN	**lbs.** kN	**lbs./ft.** kg/m
53R	**3.000** 76.20	**1.000** 25.40	**0.437** 11.10	**1.500** 38.10	– –	Large	**0.187** 4.75	**1.125** 28.58	**2.280** 57.91	Straight	**13,000** 57.82	**2,100** 9.34	**3.900** 5.80
95R	**4.000** 101.60	**1.000** 25.40	**0.440** 11.18	**1.500** 38.10	– –	Large	**0.190** 4.83	**1.125** 28.58	**2.280** 57.91	Straight	**13,000** 57.82	**2,100** 9.34	**3.400** 5.06
2184R	**6.000** 152.40	**1.380** 35.05	**0.875** 22.23	**3.000** 76.20	– –	Large	**0.380** 9.65	**2.000** 50.80	**3.750** 95.25	Offset	**43,000** 191.26	**6,500** 28.91	**12.300** 18.30
2184R	**6.000** 152.40	**1.380** 35.05	**0.875** 22.23	**3.000** 76.20	**1.180** 29.97	Flange	**0.380** 9.65	**2.000** 50.80	**3.750** 95.25	Offset	**43,000** 191.26	**6,500** 28.91	**12.300** 18.30
2184RX	**6.000** 152.40	**1.380** 35.05	**0.875** 22.23	**3.000** 76.20	– –	Large	**0.380** 9.65	**2.000** 50.80	**3.750** 95.25	Offset	**75,000** 333.60	**6,500** 28.91	**12.300** 18.30
2184RX	**6.000** 152.40	**1.380** 35.05	**0.875** 22.23	**3.000** 76.20	**1.180** 29.97	Flange	**0.380** 9.65	**2.000** 50.80	**3.750** 95.25	Offset	**75,000** 333.60	**6,500** 28.91	**12.300** 18.30
12230	**12.000** 304.80	**4.100** 104.14	**1.500** 38.10	**3.500** 88.90	– –	Small	**0.625** 15.88	**4.000** 101.60	**7.600** 193.04	Offset	**280,000** 1,245.44	**36,300** 161.46	**39.200** 58.34

BAGASSE CARRIER CHAIN

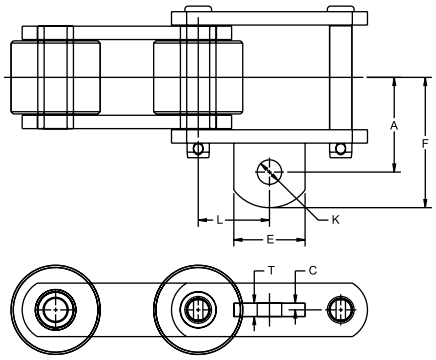

TABLE 166. BAGASSE CARRIER CHAIN ATTACHMENTS

Attachment	Chain No.	A	C	E	F	K	L	T	Weight
		in. mm	**in.** mm	**in.** mm	**in.** mm	**in.** mm	**in.** mm	**in.** mm	**lbs./ft.** kg/mmm
A42	53R	**1.560** 39.62	**0.130** 3.30	**1.000** 25.40	**2.000** 50.80	**0.380** 9.65	**2.000** 50.80	**0.250** 6.35	**4.200** 6.25
A42	95R	**1.630** 41.40	**0.190** 4.83	**1.250** 31.75	**2.130** 54.10	**0.380** 9.65	**3.000** 76.20	0.380 9.65	**3.600** 5.36
A42	2184RX	**2.630** 66.80	**0.250** 6.35	**2.000** 50.80	**3.630** 92.20	**0.630** 16.00	**3.000** 76.20	0.500 12.70	**13.600** 20.24
A42	2184RX	**2.630** 66.80	**0.250** 6.35	**2.000** 50.80	**3.630** 92.20	**0.630** 16.00	**3.000** 76.20	0.625 15.88	**13.600** 20.24

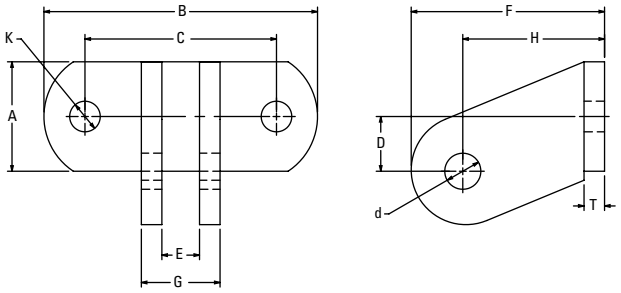

TABLE 167. BAGASSE CARRIER CHAIN ATTACHMENT

Bucket Wing Style	Attachment	A	B	C	D	E	F	G	H	K	d	T	Approx, Weight
		in. mm	**in.** mm	**in.** mm	**in.** mm	**in.** mm	**in.** mm	**in.** mm	**in.** mm	**in.** mm	**in.** mm	**in.** mm	**lbs./ft.** kg/mmm
Style C	2C	**2.00** 50.80	**5.00** 127.00	**3.50** 88.90	**1.00** 25.40	**0.69** 17.48	**3.54** 89.79	**1.44** 36.53	**2.24** 56.90	**0.50** 12.70	**0.66** 16.76	**0.38** 9.53	**2.80** 1.27

MAIN CANE CARRIER CHAIN

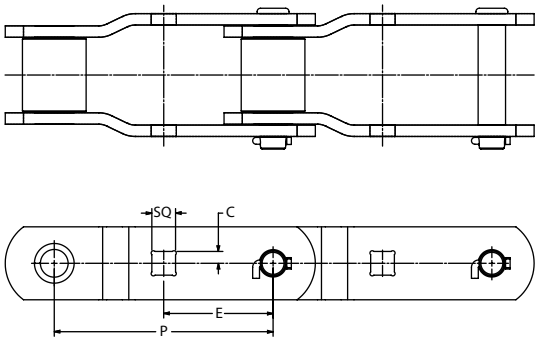

TABLE 168. MAIN CANE CARRIER CHAIN

Attachment	Chain No.	SQ	C	E	P
		in. mm	**in.** mm	**in.** mm	**in.** mm
GK1	12230	**1.250** 31.75	**0.625** 15.88	**6.000** 152.40	**12.000** 304.80

HOLLOW PIN CHAIN



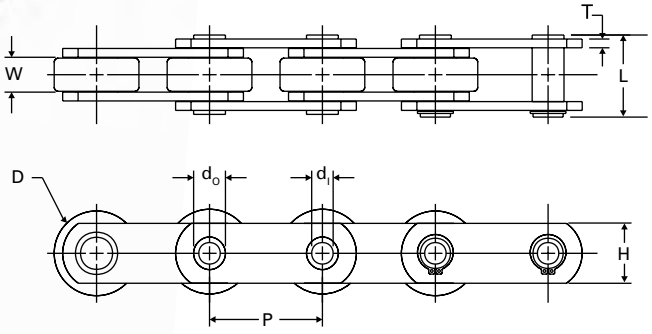

TABLE 169. HOLLOW PIN CHAIN

Chain No.	Pitch P	Inside Width W	Hollow Pin Inside Diameter d_i	Hollow Pin Outside Diameter d_o	Roller Diameter D	Link Plate Thickness T	Link Plate Height H	Overall Pin Length L	Average Tensile Strength	Maximum Recommended Working Load	Weight
	in. mm	**in.** mm	**in.** mm	**in.** mm	**in.** mm	**in.** mm	**in.** mm	**in.** mm	**lbs.** kN	**lbs.** kN	**lbs./ft.** kg/m
HP200	**2.000** 50.80	**0.617** 15.67	**0.382** 9.70	**0.564** 14.33	**1.500** 38.10	**0.156** 3.96	**1.060** 26.92	**1.453** 36.91	**15,000** 66.72	**2,600** 11.56	**2.500** 3.72



AGRICULTURAL CONVEYOR CHAIN PRODUCTS

Drives manufactures a complete line of agriculture chain that go on combines, spreaders, etc. Drives chains are manufactured to the OEM specifications for maximum strength and wear life.

- Standard
- Heavy
- Double Pitch
- Attachments

AGRICULTURAL CONVEYOR CHAIN PRODUCTS

PRECISION DRIVE ROLLER CHAIN

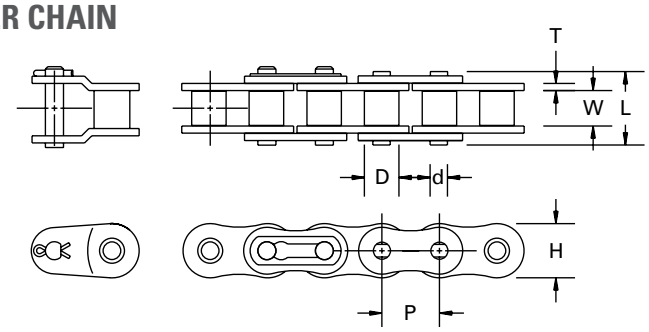

TABLE 170. PRECISION DRIVE ROLLER CHAIN

Chain No.	Pitch P	Inside Width W	Pin Diameter d	Roller Diameter D	Link Plate Thickness T	Link Plate Height H	Overall Pin Length L	Average Tensile Strength	Weight
	in. mm	**in.** mm	**in.** mm	**in.** mm	**in.** mm	**in.** mm	**in.** mm	**lbs.** kN	**lbs./ft.** kg/m
35	**0.375** 9.53	**0.189** 4.80	**0.141** 3.58	**0.200** 5.08	**0.049** 1.24	**0.355** 9.02	**0.461** 11.71	**2,100** 9.34	**0.210** 0.31
41	**0.500** 12.70	**0.252** 6.40	**0.141** 3.58	**0.306** 7.77	**0.049** 1.24	**0.382** 9.70	**0.524** 13.31	**2,400** 10.68	**0.273** 0.41
40	**0.500** 12.70	**0.313** 7.95	**0.156** 3.96	**0.313** 7.95	**0.060** 1.52	**0.472** 11.99	**0.630** 16.00	**3,700** 16.46	**0.420** 0.63
50	**0.625** 15.88	**0.376** 9.55	**0.200** 5.08	**0.400** 10.16	**0.080** 2.03	**0.590** 14.99	**0.795** 20.19	**6,100** 27.13	**0.713** 1.06
60	**0.750** 19.05	**0.500** 12.70	**0.234** 5.94	**0.469** 11.91	**0.094** 2.39	**0.705** 17.91	**0.996** 25.30	**8,500** 37.81	**1.067** 1.59
80	**1.000** 25.40	**0.627** 15.93	**0.313** 7.95	**0.625** 15.88	**0.125** 3.18	**0.943** 23.95	**1.283** 32.59	**14,500** 64.50	**1.868** 2.78
100	**1.250** 31.75	**0.755** 19.18	**0.375** 9.53	**0.750** 19.05	**0.156** 3.96	**1.180** 29.97	**1.595** 40.51	**24,000** 106.75	**2.801** 4.17
120	**1.500** 38.10	**1.000** 25.40	**0.437** 11.10	**0.875** 22.23	**0.187** 4.75	**1.425** 36.20	**1.955** 49.66	**34,000** 151.23	**4.135** 6.15
140	**1.750** 44.45	**1.000** 25.40	**0.500** 12.70	**1.000** 25.40	**0.220** 5.59	**1.663** 42.24	**2.136** 54.25	**46,000** 204.61	**5.136** 7.64
160	**2.000** 50.80	**1.250** 31.75	**0.562** 14.27	**1.125** 28.58	**0.250** 6.35	**1.899** 48.23	**2.538** 64.47	**58,000** 257.98	**6.603** 9.83
180	**2.250** 57.15	**1.400** 35.56	**0.687** 17.45	**1.406** 35.71	**0.281** 7.14	**2.132** 54.15	**2.780** 70.61	**95,000** 422.56	**9.100** 13.54
200	**2.500** 63.50	**1.490** 37.85	**0.781** 19.84	**1.562** 39.67	**0.312** 7.92	**2.312** 58.72	**3.088** 78.44	**100,000** 444.80	**10.900** 16.22
240	**3.000** 76.20	**1.864** 47.35	**0.937** 23.80	**1.875** 47.63	**0.375** 9.53	**2.812** 71.42	**3.708** 94.18	**152,000** 676.10	**16.400** 24.41

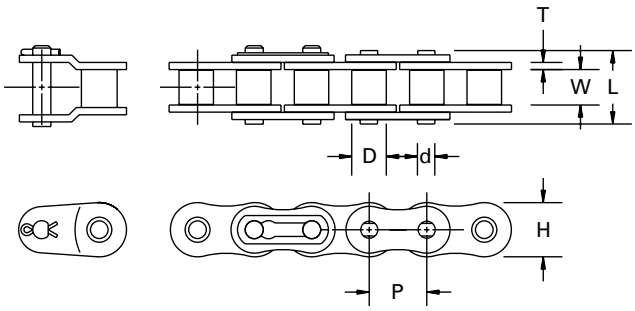

TABLE 171. PRECISION HEAVY DRIVE ROLLER CHAIN

Chain No.	Pitch P	Inside Width W	Pin Diameter d	Roller Diameter D	Link Plate Thickness T	Link Plate Height H	Overall Pin Length L	Average Tensile Strength	Weight
	in. mm	**in.** mm	**in.** mm	**in.** mm	**in.** mm	**in.** mm	**in.** mm	**lbs.** kN	**lbs./ft.** kg/m
60H-1R	**0.750** 19.05	**0.500** 12.70	**0.234** 5.94	**0.469** 11.91	**0.125** 3.18	**0.709** 18.01	**1.140** 28.96	**8,500** 37.81	**1.265** 1.88
80H-1R	**1.000** 25.40	**0.625** 15.88	**0.312** 7.92	**0.625** 15.88	**0.156** 3.96	**0.949** 24.10	**1.413** 35.89	**14,500** 64.50	**2.462** 3.66
100H-1R	**1.250** 31.75	**0.750** 19.05	**0.375** 9.53	**0.750** 19.05	**0.187** 4.75	**1.186** 30.12	**1.725** 43.82	**24,000** 106.75	**3.223** 4.80
120H-1R	**1.500** 38.10	**1.000** 25.40	**0.437** 11.10	**0.875** 22.23	**0.219** 5.56	**1.425** 36.20	**2.085** 52.96	**34,000** 151.23	**4.614** 6.87

A SERIES DOUBLE PITCH

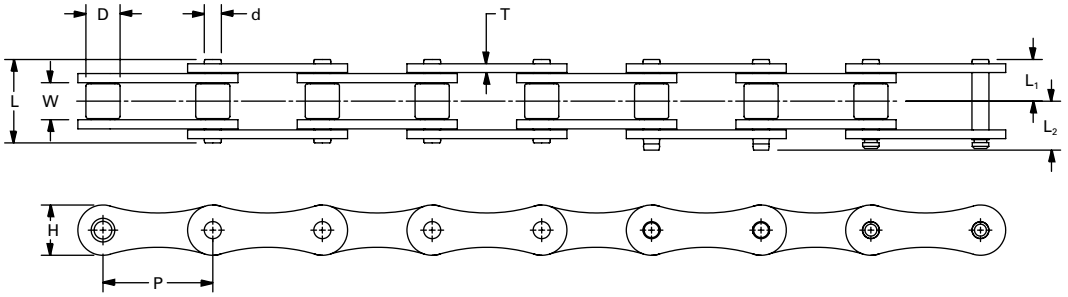

TABLE 172. PRECISION HEAVY SERIES DRIVE ROLLER CHAIN

Chain No.	Pitch	Width Between Link Plates	Roller Diameter	Link Plate		Pin Diameter	Pin			Average Weight
	P	W	D	H	T	d	L	L_1	L_2	
	in. mm	**in.** mm	**in.** mm	**in.** mm	**in.** mm	**in.** mm	**in.** mm	**in.** mm	**in.** mm	**lbs./ft.** kg/m
A2040	**1.000** 25.40	**0.312** 7.92	**0.312** 7.92	**0.060** 1.52	**0.156** 3.96	**0.472** 11.99	**0.638** 16.21	**0.638** 16.21	**0.638** 16.21	**0.270** 0.40
A2050	**1.250** 31.75	**0.376** 9.55	**0.400** 10.16	**0.080** 2.03	**0.200** 5.08	**0.590** 14.99	**0.795** 20.19	**0.795** 20.19	**0.795** 20.19	**0.450** 0.67
A2060	**1.500** 38.10	**0.500** 12.70	**0.469** 11.91	**0.094** 2.39	**0.234** 5.94	**0.705** 17.91	**0.996** 25.30	**0.996** 25.30	**0.996** 25.30	**0.630** 0.94

CONVEYOR SERIES CA

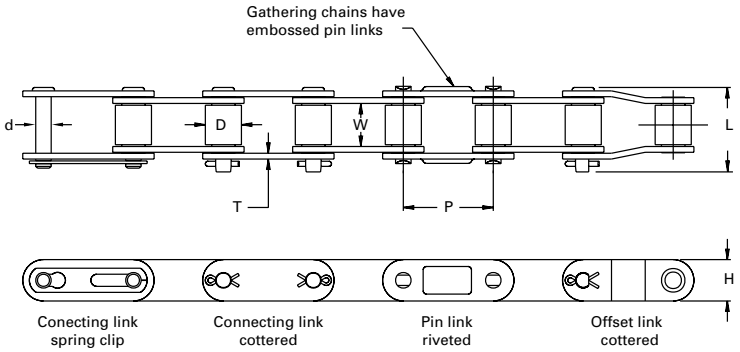

TABLE 173. CARBON STEEL ROLLER CONVEYOR CHAIN

Chain No.	Pitch	Inside Width	Pin Diameter	Roller Diameter	Link Plate Thickness	Link Plate Height	Overall Pin Length	Average Tensile Strength	Maximum Recommended Working Load	Weight
	P	W	d	D	T	H	L			
	in. mm	**in.** mm	**in.** mm	**in.** mm	**in.** mm	**in.** mm	**in.** mm	**lbs.** kN	**lbs.** kN	**lbs./ft.** kg/m
CA550	**1.630** 41.40	**0.797** 20.24	**0.281** 7.14	**0.656** 16.66	**0.105** 2.67	**0.750** 19.05	**1.562** 39.67	**11,250** 50.04	**1,400** 6.23	**1.279** 1.90
CA550HD	**1.630** 41.40	**0.767** 19.48	**0.326** 8.28	**0.656** 16.66	**0.120** 3.05	**0.780** 19.81	**1.586** 40.28	**11,500** 51.15	**1,700** 7.56	**1.409** 2.10
CA555	**1.630** 41.40	**0.500** 12.70	**0.281** 7.14	**0.656** 16.66	**0.120** 3.05	**0.750** 19.05	**1.302** 33.07	**11,250** 50.04	**1,100** 4.89	**1.238** 1.84
CA557	**1.630** 41.40	**0.797** 20.24	**0.315** 8.00	**0.700** 17.78	**0.120** 3.05	**0.906** 23.01	**1.593** 40.46	**16,500** 73.39	**1,700** 7.56	**1.719** 2.56
CA960	**1.630** 41.40	**0.890** 22.61	**0.350** 8.89	**0.700** 17.78	**0.120** 3.05	**0.910** 23.11	**1.580** 40.13	**15,500** 68.94	**2,050** 9.12	**1.809** 2.69
CA620	**1.654** 42.01	**0.987** 25.07	**0.281** 7.14	**0.696** 17.68	**0.120** 3.05	**0.750** 19.05	**1.841** 46.76	**12,000** 53.38	**1,700** 7.56	**1.609** 2.39

DRIVES ROLLER CHAIN PRODUCTS

CA551X



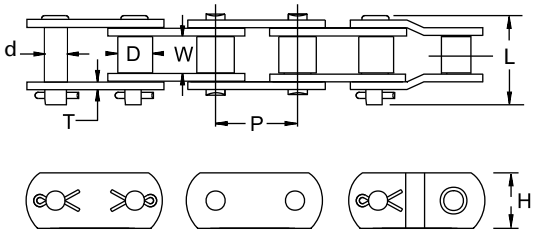

TABLE 174. CARBON STEEL BUSHED CONVEYOR CHAIN

Chain No.	Pitch P	Inside Width W	Pin Diameter d	Bushing Diameter D	Link Plate Thickness T	Link Plate Height H	Overall Pin Length L	Average Tensile Strength	Maximum Recommended Working Load	Weight
	in. mm	**in.** mm	**in.** mm	**in.** mm	**in.** mm	**in.** mm	**in.** mm	**lbs.** kN	**lbs.** kN	**lbs./ft.** kg/m
CA551X	**1.630** 41.40	**0.797** 20.24	**0.437** 11.10	**0.656** 16.66	**0.155** 3.94	**1.125** 28.58	**1.813** 46.05	**20,000** 88.96	**2,400** 10.68	**2.424** 3.61

DOUBLE PITCH CONVEYOR



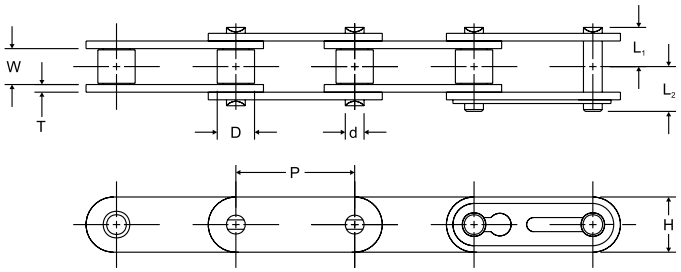

TABLE 175. PRECISION CONVEYOR ROLLER CHAIN

Chain No.	Pitch P	Main Roller Link Inside Width W	Roller Dia. D	Link Plate		Pin			Maximum Allowable Load Carbon Steel	Average Weight
				H	T	d	L_1	L_2		
	in. mm	**in.** mm	**in.** mm	**in.** mm	**in.** mm	**in.** mm	**in.** mm	**in.** mm	**lbs.** kN	**lbs./ft.** kg/m
C2040	**1.000** 25.40	**0.312** 7.92	**0.312** 7.92	**0.472** 11.99	**0.060** 1.52	**0.156** 3.96	**0.319** 8.10	**0.382** 9.70	**615** 2.74	**0.340** 0.506
C2050	**1.250** 31.75	**0.376** 9.55	**0.400** 10.16	**0.590** 14.99	**0.080** 2.03	**0.200** 5.08	**0.409** 10.39	**0.477** 12.12	**1,010** 4.49	**0.580** 0.863
C2060H	**1.500** 38.10	**0.500** 12.70	**0.469** 11.91	**0.687** 17.45	**0.125** 3.18	**0.234** 5.94	**0.590** 14.99	**0.660** 16.76	**1,410** 6.27	**1.010** 1.503
C2080H	**2.000** 50.80	**0.626** 15.90	**0.625** 15.88	**0.943** 23.95	**0.156** 3.96	**0.312** 7.92	**0.745** 18.92	**0.845** 21.46	**2,350** 10.45	**1.770** 2.634
C2100H	**2.500** 63.50	**0.750** 19.05	**0.750** 19.05	**1.150** 29.21	**0.187** 4.75	**0.375** 9.53	**0.830** 21.08	**0.980** 24.89	**3,800** 16.90	**2.380** 3.542
C2120H	**3.000** 76.20	**1.000** 25.40	**0.875** 22.23	**1.370** 34.80	**0.219** 5.56	**0.437** 11.10	**1.030** 26.16	**1.210** 30.73	**5,380** 23.93	**3.410** 5.075
C2160H	**4.000** 101.60	**1.250** 31.75	**1.125** 28.58	**1.870** 47.50	**0.281** 7.14	**0.563** 14.30	**1.337** 33.96	**1.514** 38.46	**9,190** 40.88	**6.020** 8.959

NOTE: Dimensions are subject to change. Contact your Drives representative to obtain certified prints for design and construction.
NOTE: Refer to the Drives Chain Configurator at cad.timken.com/configurator.

AGRICULTURAL CONVEYOR PRECISION ROLLER CHAIN ATTACHMENTS

A1, A1S

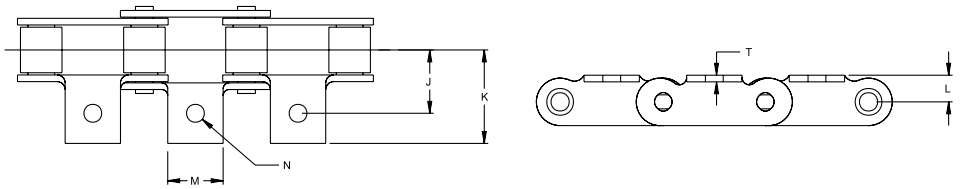

TABLE 176. A1 AND A1S PRECISION CHAIN ATTACHMENTS

Attachment	Chain No.	J	K	N	M	L	T
		in. mm	**in.** mm	**in.** mm	**in.** mm	**in.** mm	**in.** mm
A1	CA550	**1.000** 25.40	**1.484** 37.69	**0.281** 7.14	**0.875** 22.23	**0.422** 10.72	**0.105** 2.67
A1	CA620	**1.234** 31.34	**1.578** 40.08	**0.281** 7.14	**0.875** 22.23	**0.453** 11.51	**0.125** 3.18
A1S	CA620	**1.234** 31.34	**1.578** 40.08	**0.343** 8.71	**0.875** 22.23	**0.453** 11.51	**0.125** 3.18

A1, A1S, A11, A4, A19, A25, A26

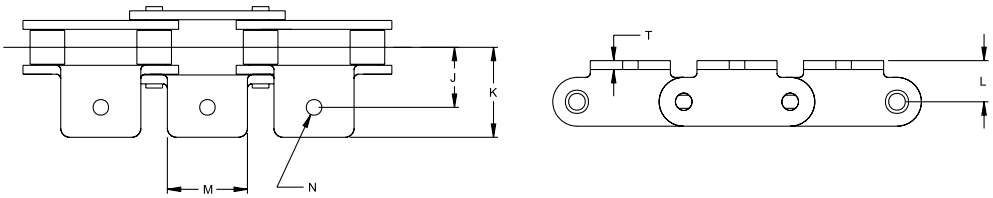

TABLE 177. A1, A1S, A11, A4, A19, A25 AND A26 PRECISION CHAIN ATTACHMENTS

Attachment	Chain No.	J	K	N	M	L	T
		in. mm	**in.** mm	**in.** mm	**in.** mm	**in.** mm	**in.** mm
A1	CA551X	**1.250** 31.75	**2.093** 53.16	**0.437** 11.10	**1.500** 38.10	**0.812** 20.62	**0.155** 3.94
A1S	C2060H	**0.844** 21.44	**1.250** 31.75	**0.262** 6.65	**1.125** 28.58	**0.578** 14.68	**0.125** 3.18
A11	C2060H	**0.844** 21.44	**1.250** 31.75	**0.343** 8.71	**1.125** 28.58	**0.578** 14.68	**0.125** 3.18
A4 On pin link only	CA550	**1.469** 37.31	**2.093** 53.16	**0.391** 9.93	**1.500** 38.10	**0.625** 15.88	**0.185** 4.70
A4 On pin link only	CA557	**1.487** 37.77	**2.114** 53.70	**0.403** 10.24	**1.500** 38.10	**0.625** 15.88	**0.185** 4.70
A19	CA557	**1.000** 25.40	**1.420** 36.07	**0.281** 7.14	**1.125** 28.58	**0.562** 14.27	**0.125** 3.18
A25	CA557	**1.000** 25.40	**1.420** 36.07	**0.343** 8.71	**1.125** 28.58	**0.562** 14.27	**0.125** 3.18
A26	C2060H	**0.844** 21.44	**1.250** 31.75	**0.406** 10.31	**1.125** 28.58	**0.578** 14.68	**0.125** 3.18

A2, A2S

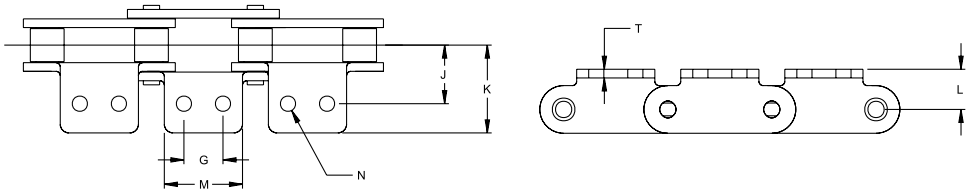

TABLE 178. A2 AND A2S PRECISION CHAIN ATTACHMENTS

Attachment	Chain No.	J	K	G	N	M	L	T
		in. mm	**in.** mm	**in.** mm	**in.** mm	**in.** mm	**in.** mm	**in.** mm
A2S	C2060H	**0.844** 21.44	**1.250** 31.75	**0.562** 14.27	**0.281** 7.14	**1.125** 28.58	**0.578** 14.68	**0.125** 3.18

A4, A1W, A24

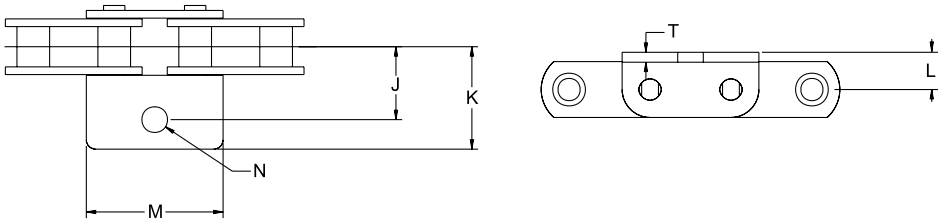

TABLE 179. A4, A1W AND A24 PRECISION CHAIN ATTACHMENTS

Attachment	Chain No.	J	K	N	M	L	T
		in. mm	**in.** mm	**in.** mm	**in.** mm	**in.** mm	**in.** mm
A4	CA551X	**1.469** 37.31	**2.062** 52.37	**0.516** 13.11	**2.750** 69.85	**0.750** 19.05	**0.200** 5.08
A1W	CA620	**1.609** 40.87	**2.125** 53.98	**0.390** 9.91	**2.350** 59.69	**0.562** 14.27	**0.120** 3.05
A24	CA620	**1.352** 34.34	**1.781** 45.24	**0.400** 10.16	**2.494** 63.35	**0.656** 16.66	**0.185** 4.70

A6

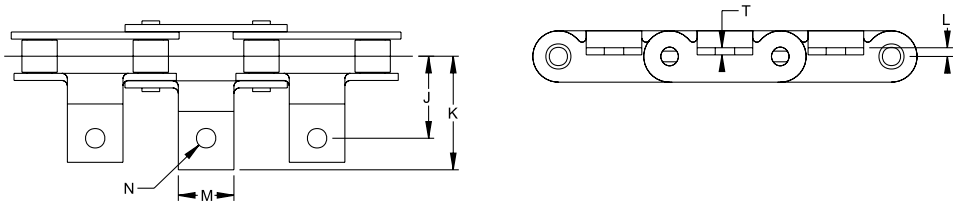

TABLE 180. A6 PRECISION CHAIN ATTACHMENTS

Attachment	Chain No.	J	K	N	M	L	T
		in. mm	**in.** mm	**in.** mm	**in.** mm	**in.** mm	**in.** mm
A6	C2050	**0.922** 23.42	**1.290** 32.77	**0.281** 7.14	**0.625** 15.88	**0.100** 2.54	**0.080** 2.03

A18, A19, A25, A27S, A29

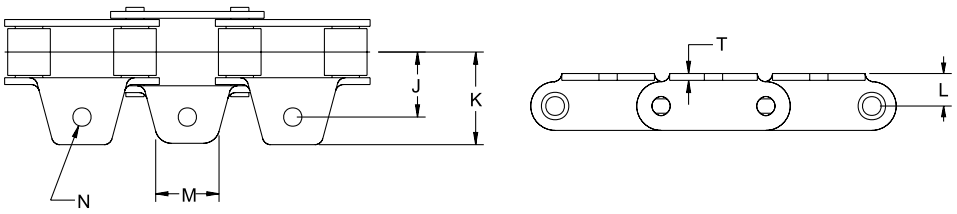

TABLE 181. A18, A19, A25, A27S AND A29 PRECISION CHAIN ATTACHMENTS

Attachment	Chain No.	J	K	N	M	L	T
		in. mm	**in.** mm	**in.** mm	**in.** mm	**in.** mm	**in.** mm
A18	CA550	**1.062** 26.97	**1.406** 35.71	**0.281** 7.14	**0.875** 22.23	**0.500** 12.70	**0.105** 2.67
A19	CA550	**1.000** 25.40	**1.406** 35.71	**0.281** 7.14	**0.875** 22.23	**0.500** 12.70	**0.105** 2.67
A19 On pin link only	CA550HD[1]	**1.006** 25.55	**1.487** 37.77	**0.328** 8.33	**1.070** 27.18	**0.650** 16.51	**0.120** 3.05
A25	CA550	**1.000** 25.40	**1.406** 35.71	**0.343** 8.71	**0.875** 22.23	**0.500** 12.70	**0.105** 2.67
A27	CA550	**1.062** 26.97	**1.406** 35.71	**0.343** 8.71	**0.875** 22.23	**0.500** 12.70	**0.105** 2.67
A27S	CA550	**1.062** 26.97	**1.406** 35.71	**0.406** 10.31	**0.875** 22.23	**0.500** 12.70	**0.105** 2.67
A29	CA550	**1.000** 25.40	**1.406** 35.71	**0.406** 10.31	**0.875** 22.23	**0.500** 12.70	**0.105** 2.67

[1]Attachment available only on pin link.

AH, AHM

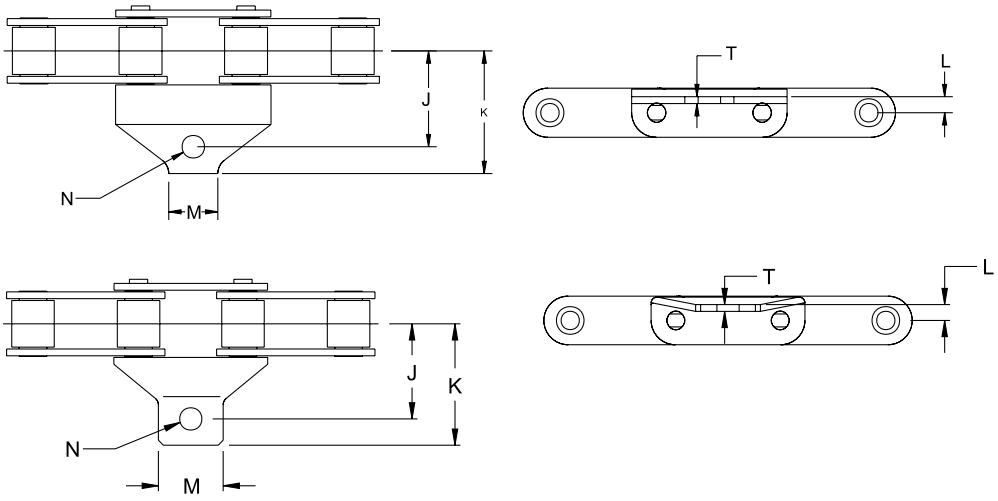

TABLE 182. AH AND AHM PRECISION CHAIN ATTACHMENTS

Attachment	Chain No.	J	K	N	M	L	T
		in. mm	**in.** mm	**in.** mm	**in.** mm	**in.** mm	**in.** mm
AH	CA550	**1.469** 37.31	**1.875** 47.63	**0.344** 8.74	**0.750** 19.05	**0.245** 6.22	**0.105** 2.67
AHM	CA550	**1.469** 37.31	**1.875** 47.63	**0.244** 6.20	**1.000** 25.40	**0.245** 6.22	**0.105** 2.67

C2E

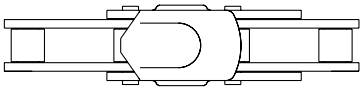

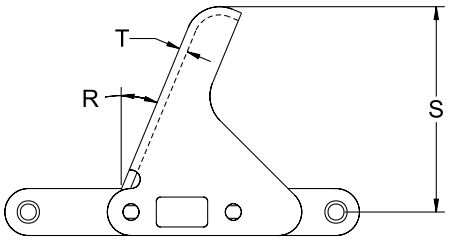

TABLE 183. C2E PRECISION CHAIN ATTACHMENT

Attachment	Chain No.	R **Degree** Radians	S **in.** mm	T **in.** mm
C2E	C2060H	**22.500** 1.676	**3.000** 76.20	**0.120** 3.05

C5E

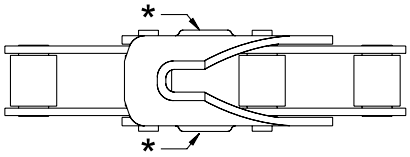

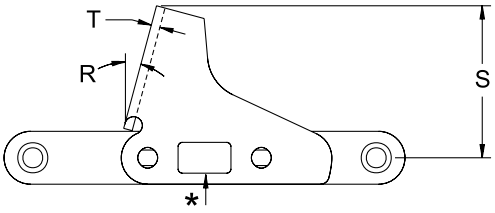

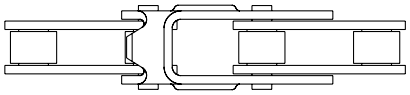

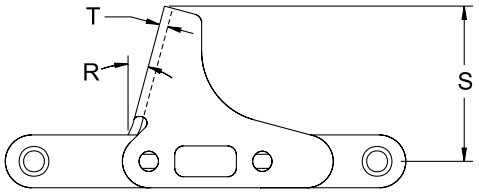

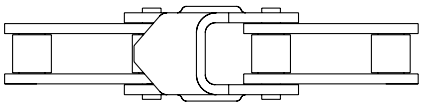

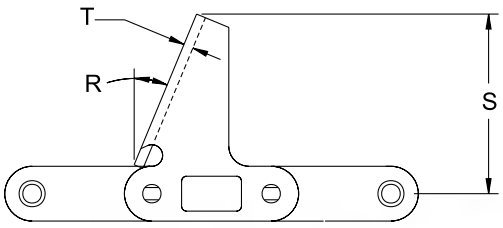

TABLE 184. C5E AND C5 PRECISION CHAIN ATTACHMENTS

Attachment	Chain No.	R **Degree** Radians	S **in.** mm	T **in.** mm
C5E	CA550	**15.0** 0.261	**2.156** 54.76	**0.105** 2.67
C5E	CA555	**15.0** 0.261	**2.250** 57.15	**0.120** 3.05
C5E	C2060H	**22.5** 0.392	**2.250** 57.15	**0.120** 3.05
C5 *No embossment	CA550	**15.0** 0.261	**2.156** 54.76	**0.120** 3.05



C12E

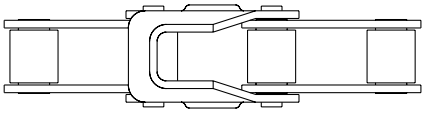

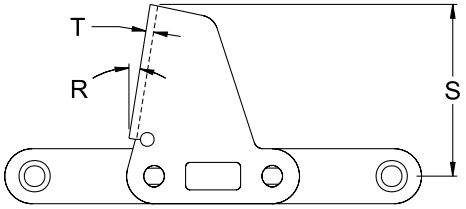

TABLE 185. C12E PRECISION CHAIN ATTACHMENT

Attachment	Chain No.	R	S	T
		Degree Radians	**in.** mm	**in.** mm
C12E	CA550	**9.000** 0.157	**2.343** 59.51	**0.105** 2.67

C6E, C6EJ

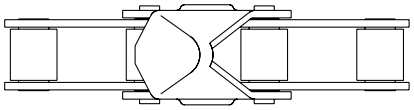

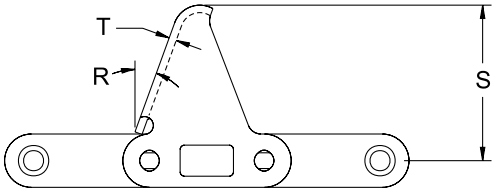

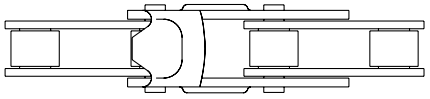

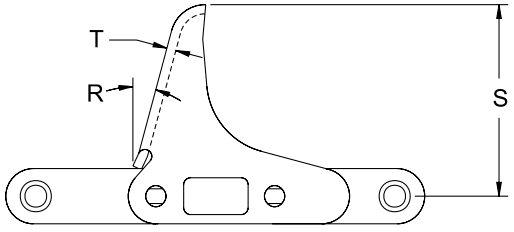

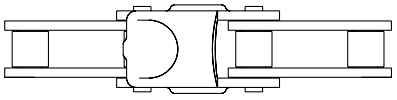

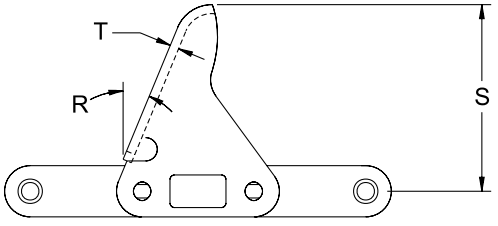

TABLE 186. C6E AND C6EJ PRECISION CHAIN ATTACHMENTS

Attachment	Chain No.	R	S	T
		Degree Radians	**in.** mm	**in.** mm
C6E	CA550	**20.0** 0.349	**2.188** 55.58	**0.105** 2.67
C6EJ	CA555	**15.0** 0.262	**2.600** 66.04	**0.120** 3.05
C6E	C2060H	**22.5** 0.393	**2.500** 63.50	**0.120** 3.05

C6E

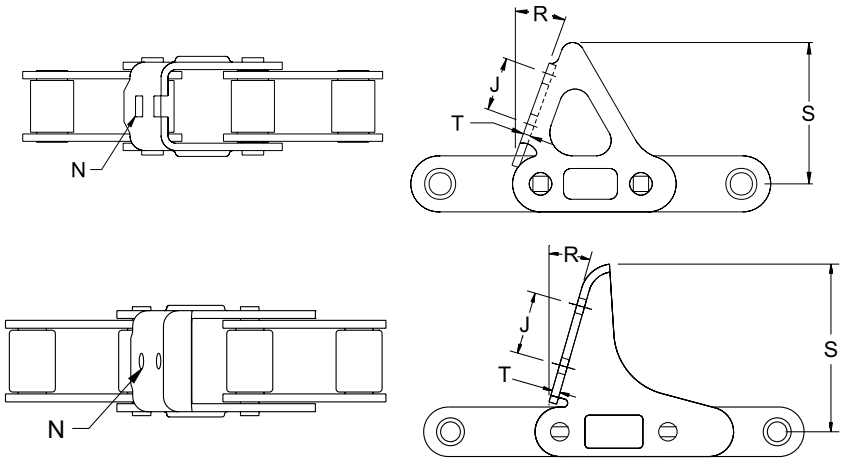

TABLE 187. C6E PRECISION CHAIN ATTACHMENTS

Attachment	Chain No.	J	N	R	S	T
		in. mm	**in.** mm	**Degree** Radians	**in.** mm	**in.** mm
C6E	CA960	**0.875** 22.23	**0.34 SQ.** 8.63 SQ.	**20.0** 0.349	**2.290** 58.17	**0.120** 3.05
C6E	CA620	**0.945** 24.00	**0.236** 5.99	**15.0** 0.262	**2.598** 65.99	**0.120** 3.05

C11E

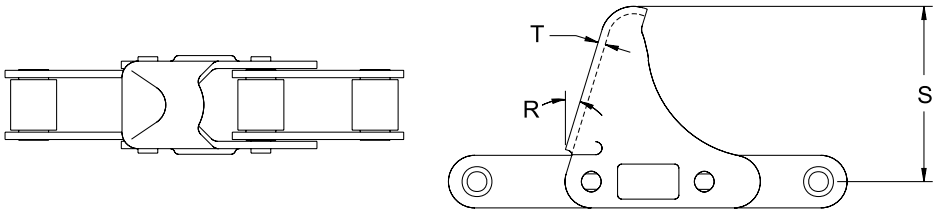

TABLE 188. C11E PRECISION CHAIN ATTACHMENT

Attachment	Chain No.	R	S	T
		Degree Radians	**in.** mm	**in.** mm
C11E	CA550	**17.0** 0.297	**2.500** 63.50	**0.105** 2.67

C13E



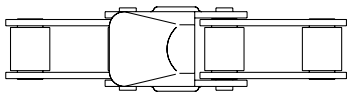

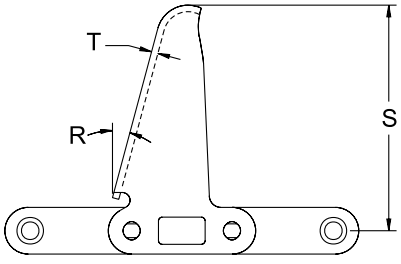

TABLE 189. C13E PRECISION CHAIN ATTACHMENTS

Attachment	Chain No.	R	S	T
		Degree Radians	**in.** mm	**in.** mm
C13E	CA550	**15.0** 0.262	**3.625** 92.08	**0.105** 2.67
C13E	CA620	**15.0** 0.262	**3.625** 92.08	**0.125** 3.18

C14E

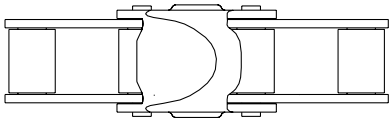

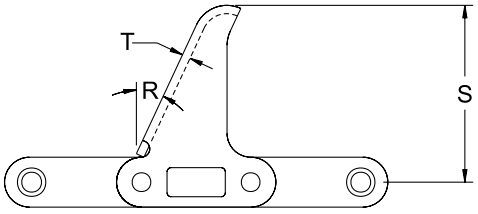

TABLE 190. C14E PRECISION CHAIN ATTACHMENT

Attachment	Chain No.	R	S	T
		Degree Radians	**in.** mm	**in.** mm
C14E	CA620	**25.0** 0.436	**2.656** 67.46	**0.125** 3.18

C17E

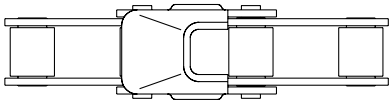

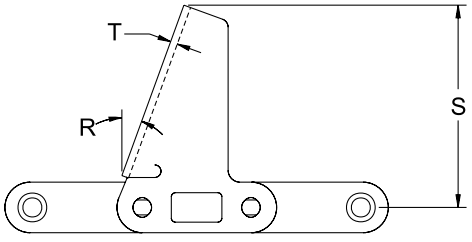

TABLE 191. C17E PRECISION CHAIN ATTACHMENT

Attachment	Chain No.	R	S	T
		Degree Radians	**in.** mm	**in.** mm
C17E	CA550	**20.0** 0.349	**3.000** 76.20	**0.105** 2.67

C18E

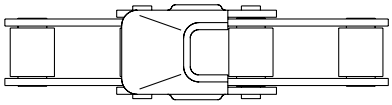

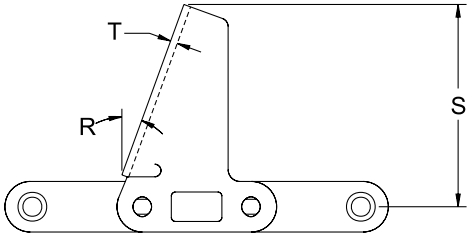

TABLE 192. C18E PRECISION CHAIN ATTACHMENT

Attachment	Chain No.	R	S	T
		Degree Radians	**in.** mm	**in.** mm
C18E	CA550HD	**18.0** 0.314	**2.500** 63.50	**0.120** 3.05

C25E

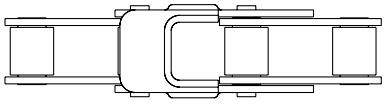

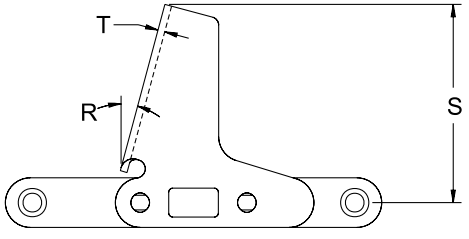

TABLE 193. C25E PRECISION CHAIN ATTACHMENT

Attachment	Chain No.	R	S	T
		Degree Radians	**in.** mm	**in.** mm
C25E	CA550	**15.0** 0.262	**3.000** 76.20	**0.105** 2.67

C30E

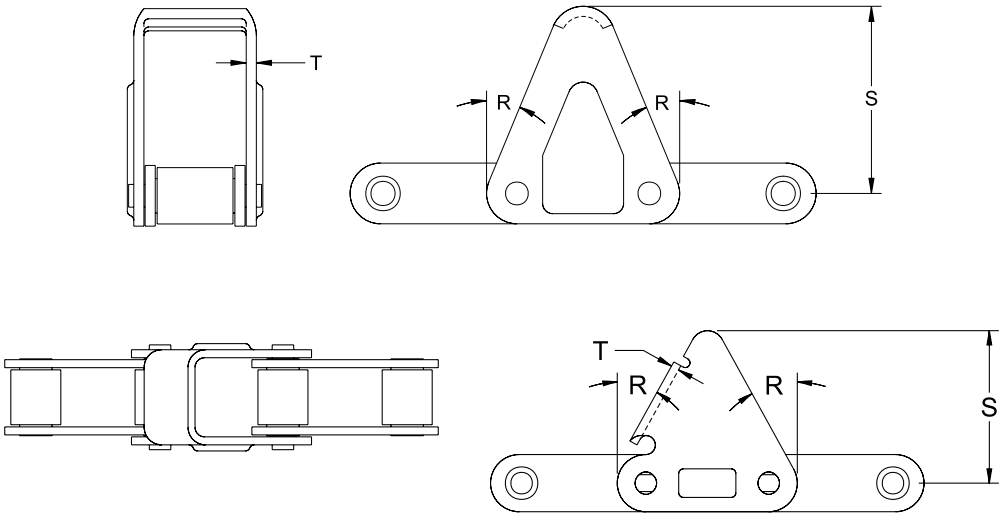

TABLE 194. C30E PRECISION CHAIN ATTACHMENTS

Attachment	Chain No.	R	S	T
		Degree Radians	**in.** mm	**in.** mm
C30E	CA620	**22.5** 0.393	**2.312** 58.72	**0.125** 3.18
C30E	CA550	**29.0** 0.506	**2.000** 50.80	**0.105** 2.67

CPE

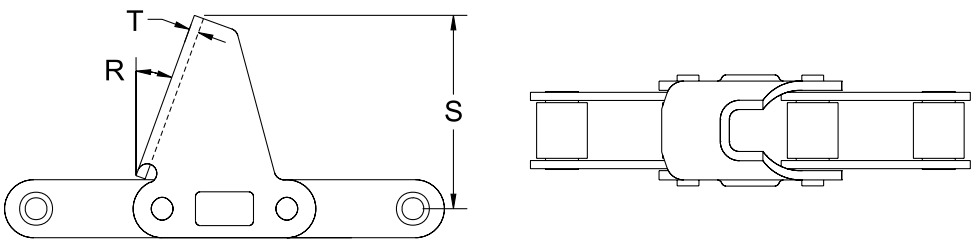

TABLE 195. CPE PRECISION CHAIN ATTACHMENT

Attachment	Chain No.	R	S	T
		Degree Radians	**in.** mm	**in.** mm
CPE	CA550	**20.0** 0.349	**2.500** 63.50	**0.105** 2.67

D1EP, D1EP2, D1EP5, D1EPS

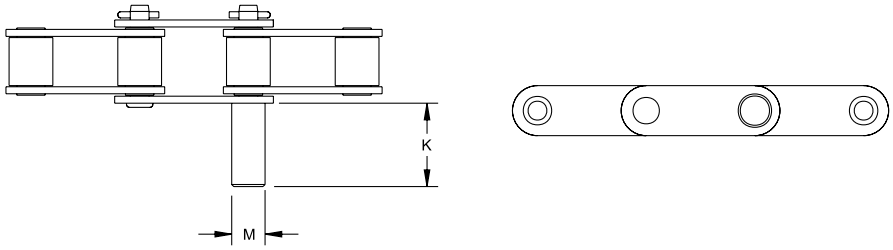

TABLE 196. D1EP, D1EP2, D1EP5, D1EPS PRECISION CHAIN ATTACHMENTS

Attachment	Chain No.	K	M
		in. mm	**in.** mm
D1EP	CA550	**1.250** 31.75	**0.500** 12.70
D1EP	CA620	**1.750** 44.45	**0.500** 12.70
D1EP2	CA550	**2.000** 50.80	**0.500** 12.70
D1EP5	CA620	**1.500** 38.10	**0.500** 12.70
D1EPS	CA620	**1.500** 38.10	**0.562** 14.27

E1

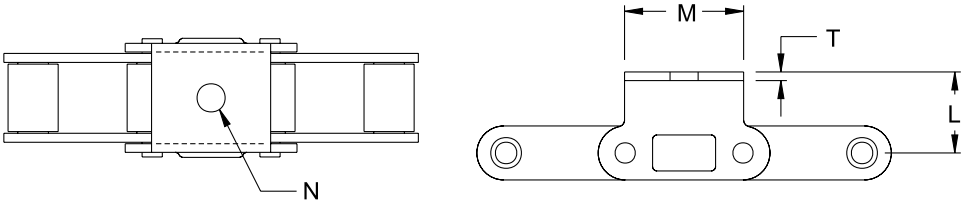

TABLE 197. E1 PRECISION CHAIN ATTACHMENT

Attachment	Chain No.	L	M	N	T
		in. mm	**in.** mm	**in.** mm	**in.** mm
E1	CA620	**1.125** 28.58	**1.654** 42.01	**0.390** 9.91	**0.120** 3.05

F2

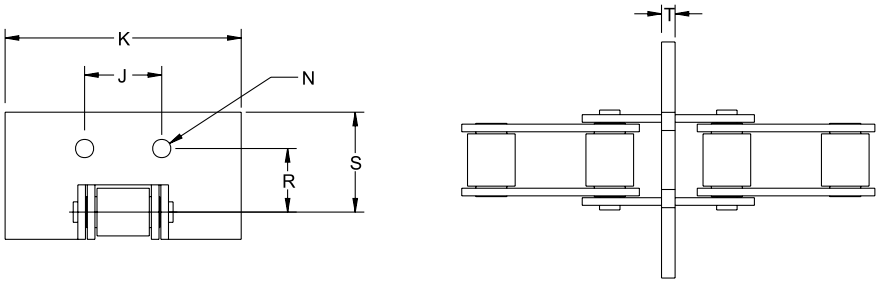

TABLE 198. F2 PRECISION CHAIN ATTACHMENT

Attachment	Chain No.	J	K	N	R	S	T
		in. mm	**in.** mm	**in.** mm	**in.** mm	**in.** mm	**in.** mm
F2	CA550	**1.062** 26.97	**3.250** 82.55	**0.250** 6.35	**0.875** 22.23	**1.375** 34.93	**0.187** 4.75

F1, F4, F4A



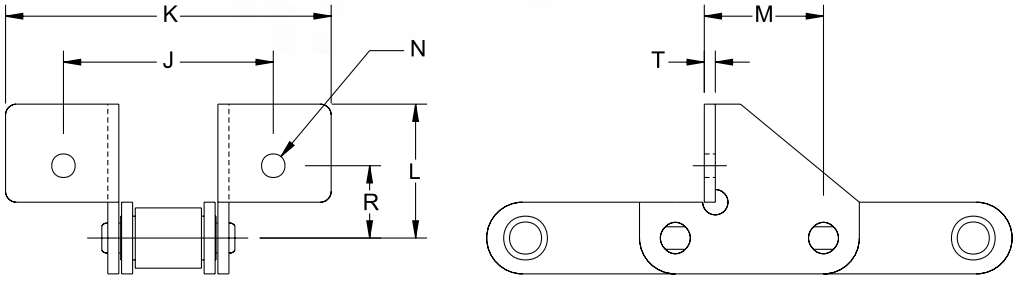

TABLE 199. F1, F4, F4A PRECISION CHAIN ATTACHMENTS

Attachment	Chain No.	J	K	N	M	R	L	T
		in. mm	**in.** mm	**in.** mm	**in.** mm	**in.** mm	**in.** mm	**in.** mm
F1 Contour/Sidebar	CA550	**2.441** 62.00	**3.307** 84.00	**0.340** 8.64	**1.279** 32.49	**0.787** 19.99	**1.260** 32.00	**0.105** 2.67
F4	CA550	**1.875** 47.63	**2.811** 71.40	**0.340** 8.64	**1.453** 36.91	**1.219** 30.96	**1.688** 42.88	**0.105** 2.67
F4	CA550HD	**2.283** 57.99	**3.540** 89.92	**0.256** 6.50	**1.297** 32.94	**0.787** 19.99	**1.460** 37.08	**0.120** 3.05
F4A	CA550HD	**2.283** 57.99	**3.540** 89.92	**0.340** 8.64	**1.297** 32.94	**0.787** 19.99	**1.460** 37.08	**0.120** 3.05

F5, F17, SE, SHE, SF, SFD



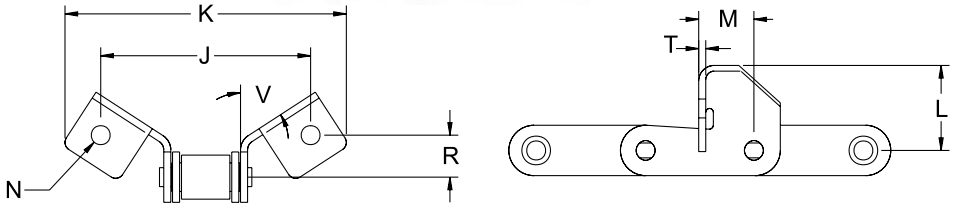

TABLE 200. F5, F17, SE, SHE, SF, SFD PRECISION CHAIN ATTACHMENTS

Attachment	Chain No.	J	K	N	M	R	L	T	V
		in. mm	**in.** mm	**in.** mm	**in.** mm	**in.** mm	**in.** mm	**in.** mm	**Degree** Radians
F5	CA550	**3.125** 79.38	**4.196** 106.58	**0.281** 7.14	**0.840** 21.34	**0.625** 15.88	**1.250** 31.75	**0.105** 2.67	**57.0** 0.995
F17	CA550	**4.500** 114.30	**5.553** 141.05	**0.390** 9.91	**1.000** 25.40	**0.811** 20.60	**1.641** 41.68	**0.105** 2.67	**60.0** 1.047
SE	CA550	**3.125** 79.38	**4.196** 106.58	**0.340** 8.64	**0.840** 21.34	**0.625** 15.88	**1.250** 31.75	**0.105** 2.67	**57.0** 0.995
SHE	CA550	**3.125** 79.38	**4.196** 106.58	**0.343** 8.71	**0.840** 21.34	**0.625** 15.88	**1.250** 31.75	**0.125** 3.18	**57.0** 0.995
SF	CA550	**3.125** 79.38	**4.196** 106.58	**0.406** 10.31	**0.840** 21.34	**0.625** 15.88	**1.250** 31.75	**0.105** 2.67	**57.0** 0.995
SFD	CA550HD	**3.125** 79.38	**4.320** 109.73	**0.328** 8.33	**0.956** 24.28	**1.125** 28.58	**1.973** 50.11	**0.120** 3.05	**22.0** 0.384

F16

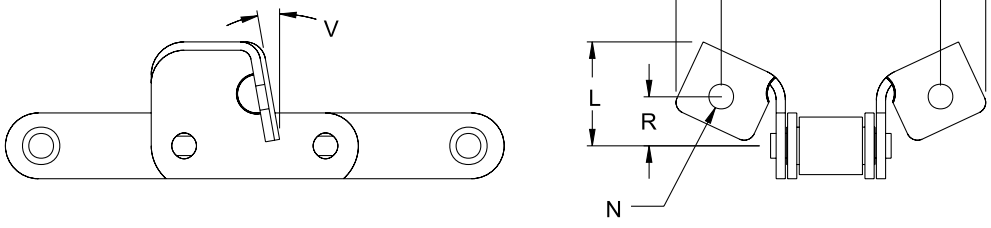

TABLE 201. F16 PRECISION CHAIN ATTACHMENT

Attachment	Chain No.	J	K	N	L	R	V
		in. mm	**in.** mm	**in.** mm	**in.** mm	**in.** mm	**Degree** Radians
F16	CA550	**2.500** 63.50	**3.531** 89.69	**0.281** 7.14	**1.188** 30.18	**0.563** 14.30	**10.0** 0.175

G27S

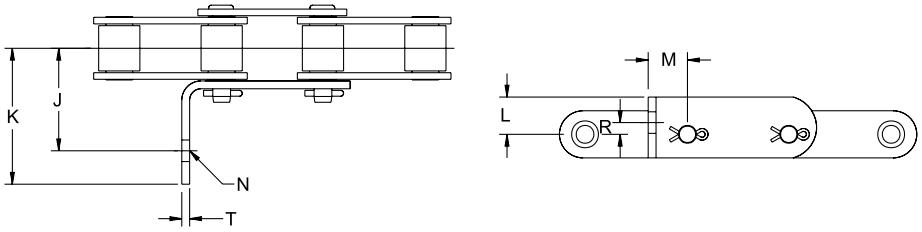

TABLE 202. G27S PRECISION CHAIN ATTACHMENT

Attachment	Chain No.	J	K	N	L	R	T	V
		in. mm	**in.** mm	**in.** mm	**in.** mm	**in.** mm	**in.** mm	**in.** mm
G27S	CA550	**1.641** 41.68	**2.172** 55.17	**0.343** 8.71	**0.625** 15.88	**0.594** 15.09	**0.188** 4.78	**0.125** 3.18

GT2

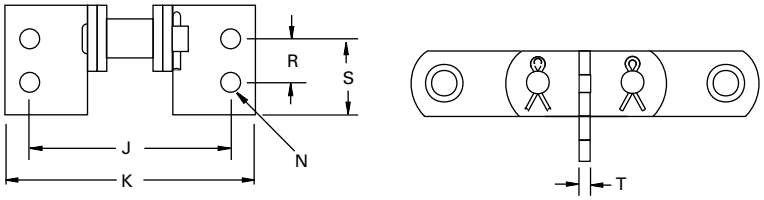

TABLE 203. GT2 PRECISION CHAIN ATTACHMENT

Attachment	Chain No.	J	K	N	R	S	T
		in. mm	**in.** mm	**in.** mm	**in.** mm	**in.** mm	**in.** mm
GT2	CA551X	**3.463** 87.96	**4.281** 108.74	**0.343** 8.71	**0.750** 19.05	**1.312** 33.32	**0.187** 4.75

K1, K1S, K11, K19, K25, K26

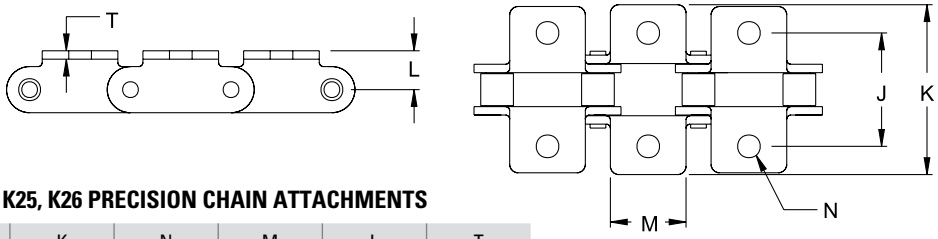

TABLE 204. K1, K1S, K11, K19, K25, K26 PRECISION CHAIN ATTACHMENTS

Attachment	Chain No.	J	K	N	M	L	T
		in. mm	**in.** mm	**in.** mm	**in.** mm	**in.** mm	**in.** mm
K1	CA551X	**2.500** 63.50	**4.187** 106.35	**0.437** 11.10	**1.500** 38.10	**0.812** 20.62	**0.155** 3.94
K1S	C2060H	**1.687** 63.50	**2.500** 6.73	**0.265** 28.58	**1.125** 14.68	**0.578** 3.18	**0.125** 3.18
K11	C2060H	**1.687** 42.85	**2.500** 63.50	**0.343** 8.71	**1.125** 28.58	**0.578** 14.68	**0.125** 3.18
K19	CA557	**2.000** 50.80	**2.840** 72.14	**0.281** 7.14	**1.125** 28.58	**0.562** 14.27	**0.125** 3.18
K25 On pin link only	CA557	**2.000** 50.80	**2.840** 72.14	**0.343** 8.71	**1.125** 28.58	**0.562** 14.27	**0.125** 3.18
K26	C2060H	**1.687** 63.50	**2.500** 10.31	**0.406** 28.58	**1.125** 14.68	**0.578** 3.18	**0.125** 3.18

K1, K1S

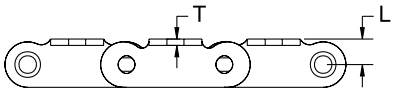

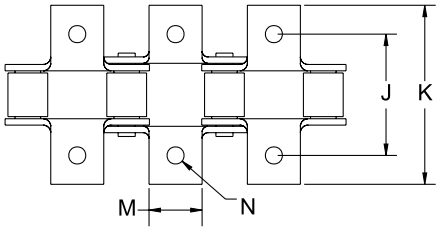



TABLE 205. K1, K1S PRECISION CHAIN ATTACHMENT

Attachment	Chain No.	J	K	N	M	L	T
		in. mm	**in.** mm	**in.** mm	**in.** mm	**in.** mm	**in.** mm
K1	CA550	**2.000** 50.80	**2.969** 75.41	**0.281** 7.14	**0.875** 22.23	**0.422** 10.72	**0.105** 2.67
K1	CA620	**2.469** 62.71	**3.156** 80.16	**0.281** 7.14	**0.875** 22.23	**0.453** 11.51	**0.125** 3.18
K1S	CA620	**2.469** 80.16	**3.156** 8.71	**0.343** 22.23	**0.875** 11.51	**0.453** 3.18	**0.125** 3.18

K1, AK27S

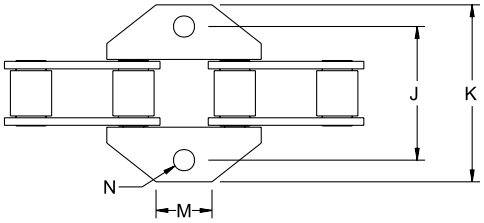

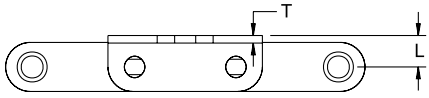

TABLE 206. K1, AK27S PRECISION CHAIN ATTACHMENTS

Attachment	Chain No.	J	K	N	M	L	T
		in. mm	**in.** mm	**in.** mm	**in.** mm	**in.** mm	**in.** mm
K1	CA550HD	**2.126** 54.00	**2.815** 71.50	**0.335** 8.51	**0.890** 22.61	**0.500** 12.70	**0.120** 3.05
AK27S Contour/Sidebar	CA557	**2.250** 57.15	**3.117** 79.17	**0.516** 13.11	**1.125** 28.58	**0.545** 13.84	**0.120** 3.05
K1S	CA620	**2.469** 80.16	**3.156** 8.71	**0.343** 22.23	**0.875** 11.51	**0.453** 3.18	**0.125** 3.18

AK25F

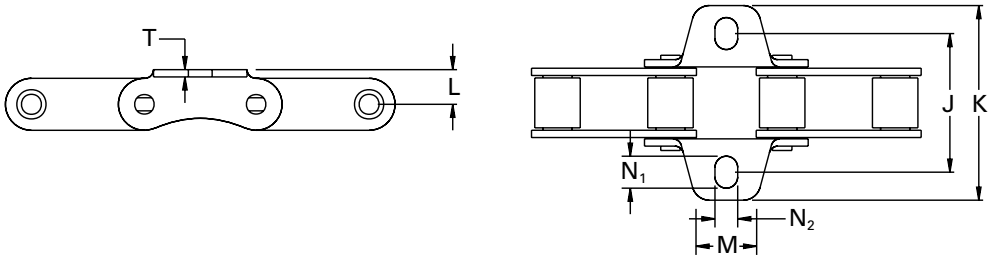

TABLE 207. AK25F PRECISION CHAIN ATTACHMENT

Attachment	Chain No.	J	K	N_1	N_2	M	L	T
		in. mm	**in.** mm	**in.** mm	**in.** mm	**in.** mm	**in.** mm	**in.** mm
AK25F	CA550	**2.000** 50.80	**2.808** 71.32	**0.461** 11.71	**0.328** 8.33	**0.875** 22.23	**0.500** 12.70	**0.105** 2.67

K18, K19, K25, K27, K27S, K29, AK25M, AK29M

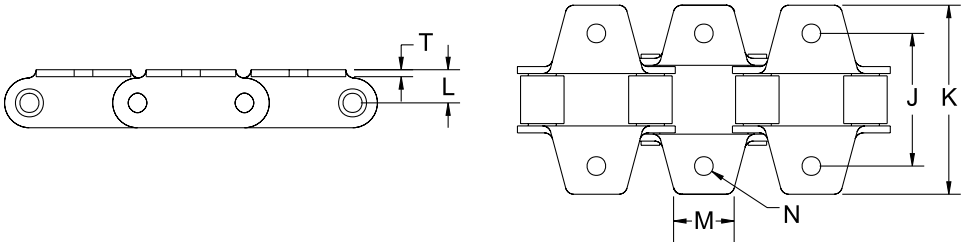

TABLE 208. K18, K19, K25, K27S, K29, AK25M, AK29M PRECISION CHAIN ATTACHMENTS

Attachment	Chain No.	J	K	N	M	L	T
		in. mm	**in.** mm	**in.** mm	**in.** mm	**in.** mm	**in.** mm
K18	CA550	**2.125** 53.98	**2.812** 71.42	**0.281** 7.14	**0.875** 22.23	**0.500** 12.70	**0.105** 2.67
K19	CA550	**2.000** 50.80	**2.812** 71.42	**0.281** 7.14	**0.875** 22.23	**0.500** 12.70	**0.105** 2.67
K19	CA550HD	**2.008** 51.00	**2.974** 75.54	**0.328** 8.33	**1.070** 27.18	**0.650** 16.51	**0.120** 3.05
K25	CA550	**2.000** 50.80	**2.812** 71.42	**0.343** 8.71	**0.875** 22.23	**0.500** 12.70	**0.105** 2.67
K27	CA550	**2.125** 53.98	**2.812** 71.42	**0.343** 8.71	**0.875** 22.23	**0.500** 12.70	**0.105** 2.67
K27S	CA550	**2.125** 53.98	**2.182** 55.42	**0.406** 10.31	**0.875** 22.23	**0.500** 12.70	**0.105** 2.67
K29	CA550	**2.000** 50.80	**2.812** 71.42	**0.406** 10.31	**0.875** 22.23	**0.500** 12.70	**0.105** 2.67
AK25M 1. Contour/Sidebar 2. On pin link only	CA550	**2.970** 75.44	**2.808** 71.32	**0.330** 8.38	**1.031** 26.19	**0.650** 16.51	**0.105** 2.67
AK25M 1. Contour/Sidebar 2. On pin link only	CA550	**2.000** 50.80	**2.970** 75.44	**0.403** 10.24	**1.031** 26.19	**0.650** 16.51	**0.105** 2.67
K26	C2060H	**1.687** 63.50	**2.500** 10.31	**0.406** 28.58	**1.125** 14.68	**0.578** 3.18	**0.578** 3.18

K35, K35M, AK39, K39, K39M, AK39M, AK29S

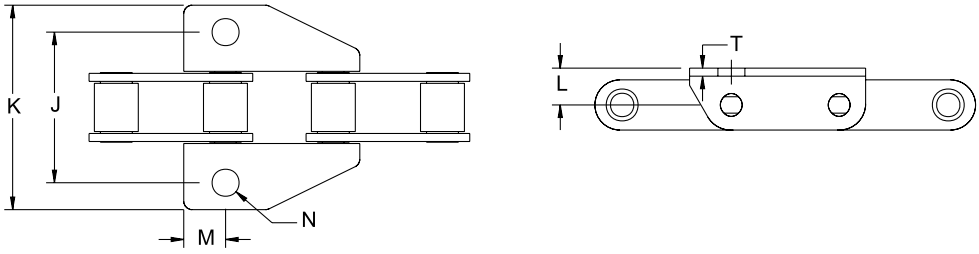

TABLE 209. K35, K35M, AK39, K39M, AK39M, AK29S PRECISION CHAIN ATTACHMENTS

Attachment	Chain No.	J	K	N	M	L	T
		in. mm	**in.** mm	**in.** mm	**in.** mm	**in.** mm	**in.** mm
K35	CA557	**2.000** 50.80	**2.890** 73.41	**0.343** 8.71	**0.625** 15.88	**0.545** 13.84	**0.120** 3.05
K35M	CA557	**2.000** 50.80	**2.890** 73.41	**0.406** 10.31	**0.625** 15.88	**0.545** 13.84	**0.120** 3.05
AK39 Contour sidebar	CA550	**2.000** 50.80	**2.812** 71.42	**0.340** 8.64	**0.625** 15.88	**0.500** 12.70	**0.105** 2.67
K39	CA557	**2.250** 57.15	**2.896** 73.56	**0.343** 8.71	**0.625** 15.88	**0.545** 13.84	**0.120** 3.05
K39M	CA550HD	**2.250** 57.15	**3.054** 77.57	**0.403** 10.24	**0.625** 15.88	**0.550** 13.97	**0.120** 3.05
AK39M Contour sidebar	CA550	**2.000** 50.80	**2.812** 71.42	**0.406** 10.31	**0.625** 15.88	**0.500** 12.70	**0.105** 2.67
AK39S Contour sidebar	CA550	**2.000** 50.80	**2.812** 71.42	**0.340** 8.64	**0.375** 9.53	**0.500** 12.70	**0.105** 2.67

M1W

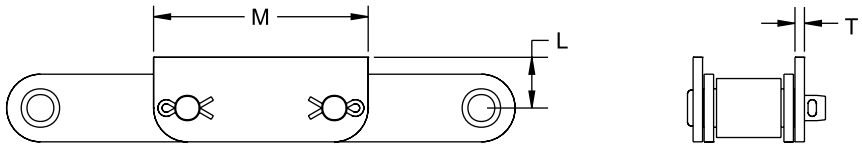

TABLE 210. M1W PRECISION CHAIN ATTACHMENT

Attachment	Chain No.	M	L	T
		in. mm	**in.** mm	**in.** mm
M1W	CA550	**2.375** 60.33	**0.562** 14.27	**0.105** 2.67

M19

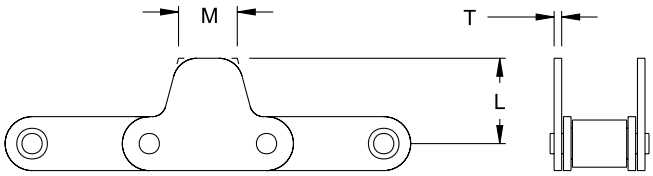

TABLE 211. M19 PRECISION CHAIN ATTACHMENT

Attachment	Chain No.	M	L	T
		in. mm	**in.** mm	**in.** mm
M19	CA550	**0.875** 22.23	**1.187** 30.15	**0.105** 2.67

MS

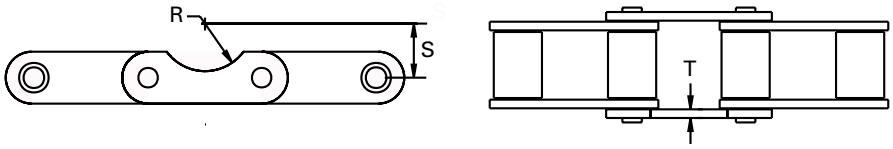

TABLE 212. MS PRECISION CHAIN ATTACHMENT

Attachment	Chain No.	R	S	T
		in. mm	**in.** mm	**in.** mm
MS	CA620	**0.750** 19.05	**0.843** 21.41	**0.120** 3.05

T-BAR PRODUCT

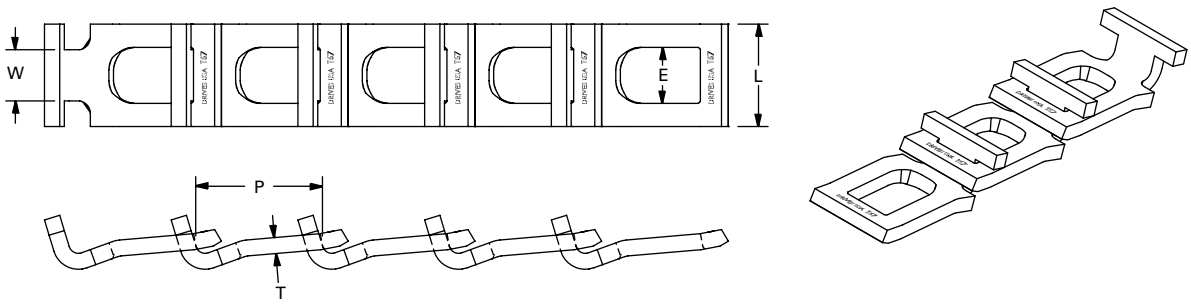

TABLE 213. ENGINEERED CLASS "T" BAR CHAIN

Chain No.	Pitch P	Inside Width E	Tab Width W	Link Plate Thickness T	Overall Width L	Average Tensile Strength	Maximum Recommended Working Load	Weight
	in. mm	**in.** mm	**in.** mm	**in.** mm	**in.** mm	**lbs.** kN	**lbs.** kN	**lbs./ft.** kg/m
T67	**2.550** 64.77	**1.094** 27.79	**1.000** 25.40	**0.312** 7.92	**2.000** 50.80	**16,000** 71.17	**2,285** 10.16	**1.977** 2.94

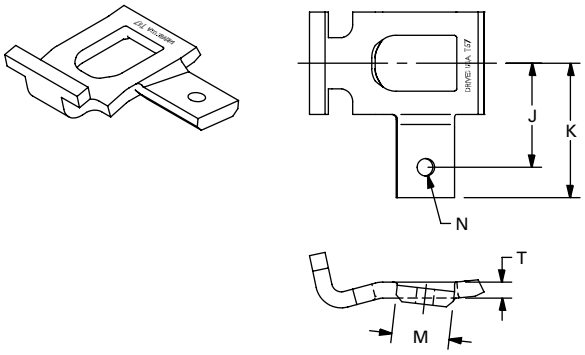

TABLE 214. AS, A1, A2 T-BAR ATTACHMENTS

Attachment	Chain No.	J	K	N	M	T
		in. mm	**in.** mm	**in.** mm	**in.** mm	**in.** mm
AS	T67	**2.031** 51.59	**3.750** 95.25	**0.328** 8.33	**1.125** 28.58	**0.312** 7.92
A1	T67	**2.031** 51.59	**3.750** 95.25	**0.391** 9.93	**1.125** 28.58	**0.312** 7.92
A2	T67	**2.031** 51.59	**3.750** 95.25	**0.453** 11.51	**1.125** 28.58	**0.312** 7.92

T-ROD PRODUCT

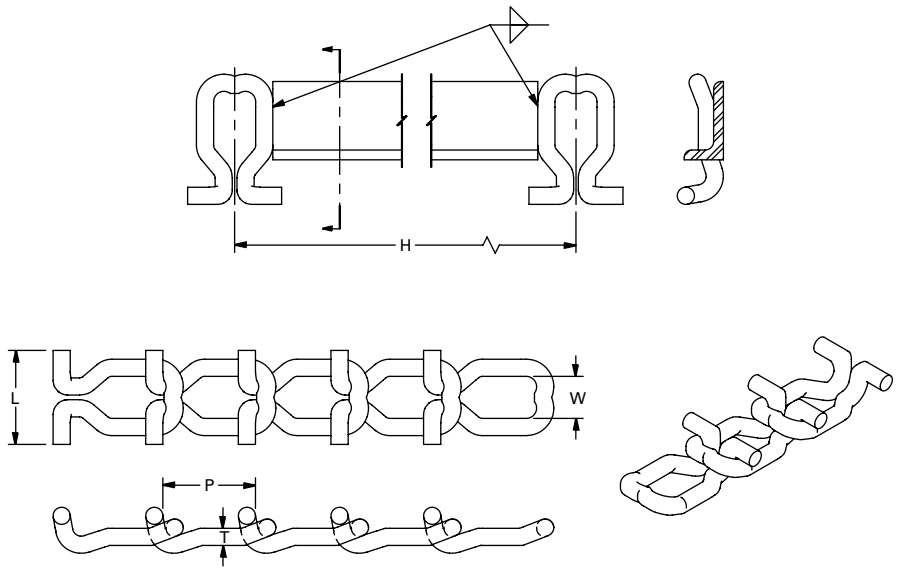

TABLE 215. T-ROD CHAIN

Chain No.	Pitch P_1	Inside Width W	Rod Thickness T	Overall Width L	Width Center to Center H	Average Tensile Strength	Maximum Recommended Working Load	Weight
	in. mm	**in.** mm	**in.** mm	**in.** mm	**in.** mm	**lbs.** kN	**lbs.** kN	**lbs./ft.** kg/m
67 T-Rod	**2.388** 60.66	**1.125** 28.58	**0.437** 11.10	**2.500** 63.50	Slat Per Customer	**16,000** 71.17	**2285.000** 10.16	**2.010** 2.99

PINTLE CHAIN

DRIVES STEEL PINTLE

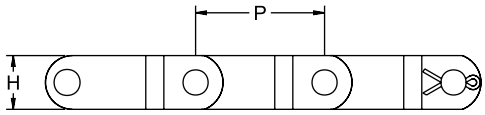

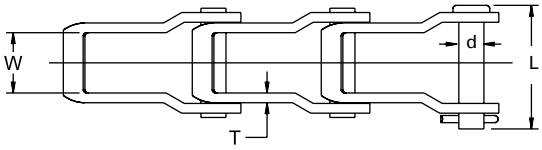

TABLE 216. PINTLE CHAIN

Chain No.	Pitch P	Inside Width W	Pin Diameter d	Link Plate Thickness T	Link Plate Height H	Overall Pin Length L	Average Tensile Strength	Maximum Recommended Working Load	Weight
	in. mm	**in.** mm	**in.** mm	**in.** mm	**in.** mm	**in.** mm	**lbs.** kN	**lbs.** kN	**lbs./ft.** kg/m
D205	**1.250** 31.75	**0.375** 9.53	**0.200** 5.08	**0.080** 2.03	**0.470** 11.94	**0.922** 23.42	**4,900** 21.80	**560** 2.49	**0.390** 0.58
D662	**1.664** 42.27	**0.906** 23.01	**0.281** 7.14	**0.125** 3.18	**0.720** 18.29	**1.672** 42.47	**11,200** 49.82	**1,700** 7.56	**1.050** 1.56
D667H	**2.313** 58.75	**1.000** 25.40	**0.312** 7.92	**0.125** 3.18	**0.875** 22.23	**1.906** 48.41	**12,900** 57.38	**1,900** 8.45	**1.170** 1.74
D667X	**2.250** 57.15	**1.063** 27.00	**0.437** 11.10	**0.170** 4.32	**0.937** 23.80	**2.172** 55.17	**21,700** 96.52	**3,000** 13.34	**1.860** 2.77
D667K	**2.250** 57.15	**1.078** 27.38	**0.437** 11.10	**0.200** 5.08	**1.062** 26.97	**2.359** 59.92	**29,700** 132.11	**4,000** 17.79	**2.440** 3.63
D88K	**2.609** 66.27	**1.078** 27.38	**0.437** 11.10	**0.200** 5.08	**1.062** 26.97	**2.359** 59.92	**26,900** 119.65	**4,000** 17.79	**2.300** 3.42

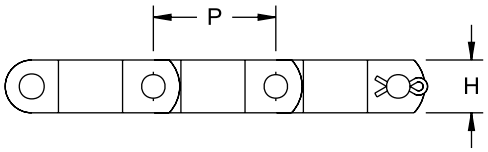

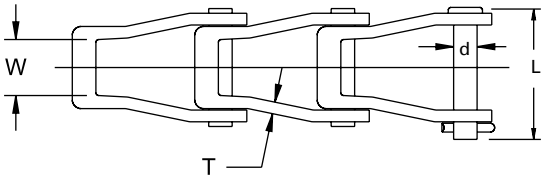

TABLE 217. COMPRESSION FORMED PINTLE CHAIN

Chain No.	Pitch P	Inside Width W	Pin Diameter d	Link Plate Thickness T	Link Plate Height H	Overall Pin Length L	Average Tensile Strength	Maximum Recommended Working Load	Weight
	in. mm	**in.** mm	**in.** mm	**in.** mm	**in.** mm	**in.** mm	**lbs.** kN	**lbs.** kN	**lbs./ft.** kg/m
D667XC	**2.250** 57.15	**1.063** 27.00	**0.437** 11.10	**0.170** 4.32	**0.937** 23.80	**2.172** 55.17	**25,100** 111.64	**3,600** 16.01	**2.100** 3.13
D667KC	**2.250** 57.15	**1.078** 27.38	**0.437** 11.10	**0.200** 5.08	**1.062** 26.97	**2.359** 59.92	**30,900** 137.44	**4,800** 21.35	**2.560** 3.81
D88C	**2.609** 66.27	**1.250** 31.75	**0.500** 12.70	**0.250** 6.35	**1.125** 28.58	**2.847** 72.31	**38,000** 169.02	**6,000** 26.69	**3.470** 5.16
D308C	**3.075** 78.11	**1.281** 32.54	**0.625** 15.88	**0.312** 7.92	**1.500** 38.10	**3.188** 80.98	**50,000** 222.40	**8,000** 35.58	**5.630** 8.38

AS, ASS, AS2

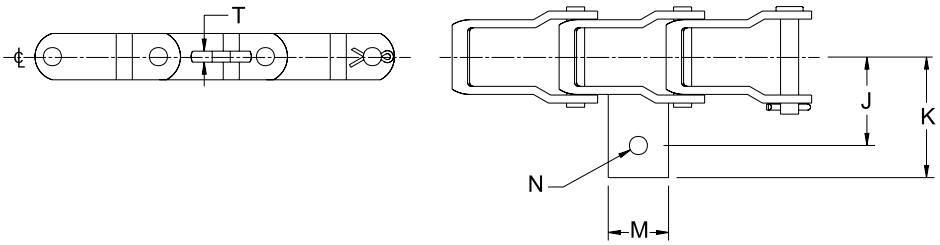

TABLE 218. AS, ASS, AS2 PRECISION CHAIN ATTACHMENTS

Attachment	Chain No.	J	K	N	M	T
		in. mm	**in.** mm	**in.** mm	**in.** mm	**in.** mm
AS	D662	**1.375** 34.93	**1.906** 48.41	**0.282** 7.16	**0.938** 23.83	**0.171** 4.34
AS	D667H	**2.031** 51.59	**2.625** 66.68	**0.343** 8.71	**1.125** 28.58	**0.250** 6.35
AS	D667X	**2.031** 51.59	**2.703** 68.66	**0.343** 8.71	**1.125** 28.58	**0.312** 7.92
AS	D667XC	**2.031** 51.59	**2.703** 68.66	**0.343** 8.71	**1.125** 28.58	**0.312** 7.92
AS	D667K	**2.031** 51.59	**2.812** 71.42	**0.406** 10.31	**1.250** 31.75	**0.375** 9.53
AS	D667KC	**2.031** 51.59	**2.812** 71.42	**0.406** 10.31	**1.250** 31.75	**0.375** 9.53
AS	D88K	**2.031** 51.59	**2.812** 71.42	**0.406** 10.31	**1.250** 31.75	**0.375** 9.53
AS	D88C	**2.750** 69.85	**3.690** 93.73	**0.437** 11.10	**1.500** 38.10	**0.375** 9.53
ASS	D662	**1.375** 34.93	**1.906** 48.41	**0.343** 8.71	**0.938** 23.83	**0.171** 4.34
ASS	D667H	**2.031** 51.59	**2.625** 66.68	**0.406** 10.31	**1.125** 28.58	**0.250** 6.35
ASS	D667X	**2.031** 51.59	**2.703** 68.66	**0.406** 10.31	**1.125** 28.58	**0.312** 7.92
ASS	D667XC	**2.031** 51.59	**2.703** 68.66	**0.406** 10.31	**1.125** 28.58	**0.312** 7.92
ASS	D667K	**2.031** 51.59	**2.812** 71.42	**0.468** 11.89	**1.250** 31.75	**0.375** 9.53
ASS	D667KC	**2.031** 51.59	**2.812** 71.42	**0.468** 11.89	**1.250** 31.75	**0.375** 9.53
ASS	D88K	**2.031** 51.59	**2.812** 71.42	**0.468** 11.89	**1.250** 31.75	**0.375** 9.53
AS2	D667H	**2.031** 51.59	**2.594** 65.89	**0.468** 11.89	**1.125** 28.58	**0.250** 6.35
AS2	D667X	**2.031** 51.59	**2.703** 68.66	**0.468** 11.89	**1.125** 28.58	**0.312** 7.92
AS2	D667XC	**2.031** 51.59	**2.703** 68.66	**0.468** 11.89	**1.125** 28.58	**0.312** 7.92

ASW

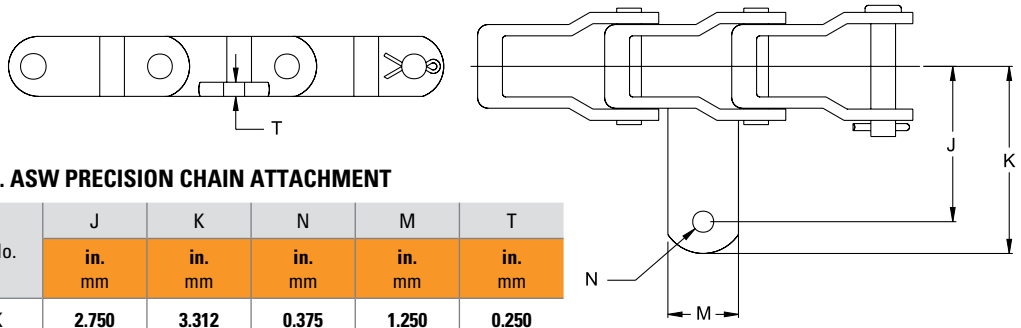

TABLE 219. ASW PRECISION CHAIN ATTACHMENT

Attachment	Chain No.	J	K	N	M	T
		in. mm	**in.** mm	**in.** mm	**in.** mm	**in.** mm
ASW	D667K	**2.750** 69.85	**3.312** 84.12	**0.375** 9.53	**1.250** 31.75	**0.250** 6.35
ASW	D667KC	**2.750** 69.85	**3.312** 84.12	**0.375** 9.53	**1.250** 31.75	**0.250** 6.35

A22

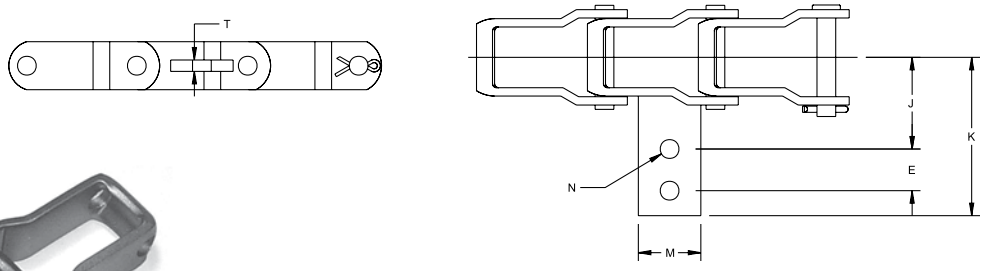

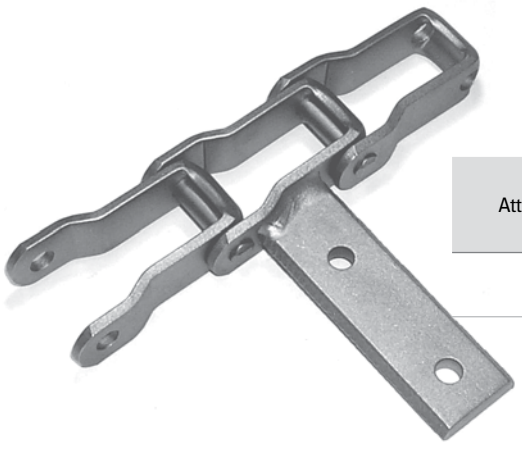

TABLE 220. A22 PRECISION CHAIN ATTACHMENT

Attachment	Chain No.	J	K	E	N	M	T
		in. mm	**in.** mm	**in.** mm	**in.** mm	**in.** mm	**in.** mm
A22	D662	**1.375** 34.93	**3.312** 84.12	**0.625** 15.88	**0.281** 7.14	**0.938** 23.83	**0.171** 4.34
A22	D88K	**2.125** 53.98	**5.375** 136.53	**2.500** 63.50	**0.406** 10.31	**1.500** 38.10	**0.375** 9.53

AK1

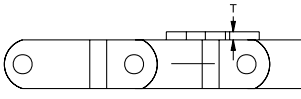

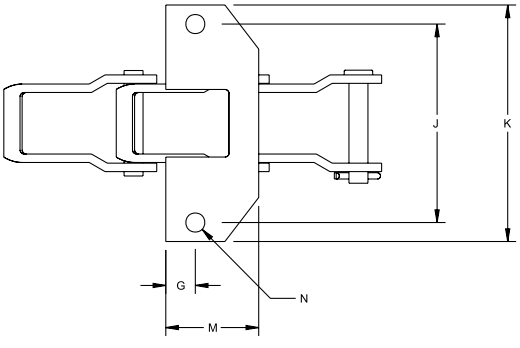

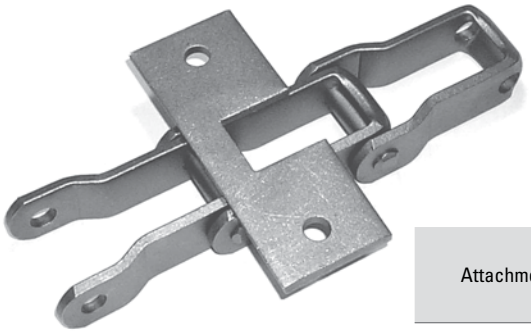

TABLE 221. AK1 PRECISION CHAIN ATTACHMENT

Attachment	Chain No.	J	K	N	M	G	T
		in. mm	**in.** mm	**in.** mm	**in.** mm	**in.** mm	**in.** mm
AK1	D662	**2.938** 74.63	**3.500** 88.90	**0.281** 7.14	**1.375** 34.93	**0.438** 11.13	**0.120** 3.05

AN

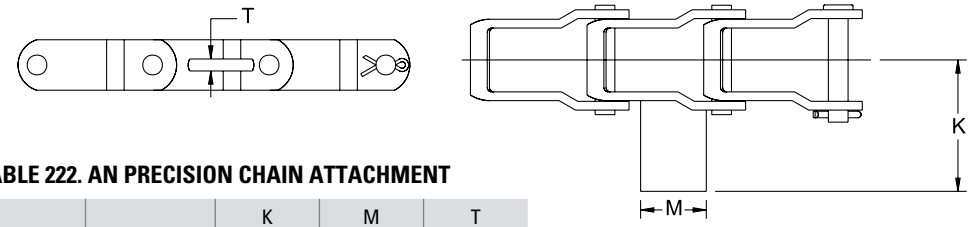

TABLE 222. AN PRECISION CHAIN ATTACHMENT

Attachment	Chain No.	K	M	T
		in. mm	**in.** mm	**in.** mm
AN	D662	**1.875** 47.63	**0.938** 23.83	**0.171** 4.34
AN	D667H	**2.719** 69.06	**1.250** 31.75	**0.312** 7.92
AN	D667X	**2.688** 68.28	**1.125** 28.58	**0.312** 7.92
AN	D667XC	**2.688** 68.28	**1.125** 28.58	**0.312** 7.92
AN	D667K	**2.812** 71.42	**1.250** 31.75	**0.375** 9.53
AN	D667KC	**2.812** 71.42	**1.250** 31.75	**0.375** 9.53
AN	D88K	**2.812** 71.42	**1.250** 31.75	**0.375** 9.53

ASO, ASSO, AST

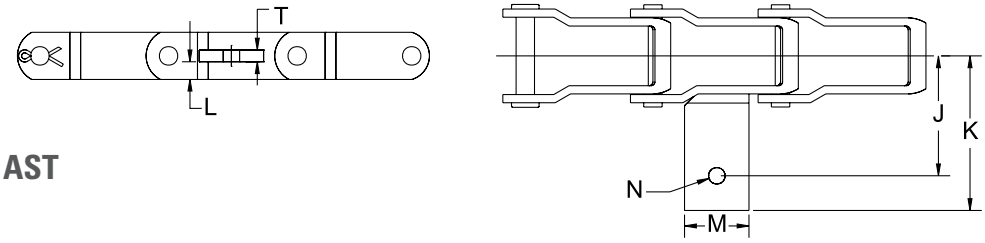

TABLE 223. ASO, ASSO, AST PRECISION CHAIN ATTACHMENTS

Attachment	Chain No.	J	K	N	M	L	T
		in. mm	**in.** mm	**in.** mm	**in.** mm	**in.** mm	**in.** mm
ASO	D667X	**2.031** 51.59	**2.688** 68.28	**0.343** 8.71	**1.125** 28.58	**0.219** 5.56	**0.312** 7.92
ASO	D667XC	**2.031** 51.59	**2.688** 68.28	**0.343** 8.71	**1.125** 28.58	**0.219** 5.56	**0.312** 7.92
ASSO	D667H	**2.031** 51.59	**2.894** 73.51	**0.406** 10.31	**1.125** 28.58	**0.188** 4.78	**0.250** 6.35
ASSO	D667X	**2.031** 51.59	**2.688** 68.28	**0.406** 10.31	**1.125** 28.58	**0.219** 5.56	**0.312** 7.92
ASSO	D667XC	**2.031** 51.59	**2.688** 68.28	**0.406** 10.31	**1.125** 28.58	**0.219** 5.56	**0.312** 7.92
ASSO	D667X	**2.078** 52.78	**0.281** 7.14	**0.406** 10.31	**1.250** 31.75	**0.312** 7.92	**0.312** 7.92
ASSO	D667XC	**2.078** 52.78	**0.281** 7.14	**0.406** 10.31	**1.250** 31.75	**0.312** 7.92	**0.312** 7.92
AST	D88C	**2.031** 51.59	**2.812** 71.42	**0.343** 8.71	**1.500** 38.10	**0.204** 5.18	**0.375** 9.53

BRH

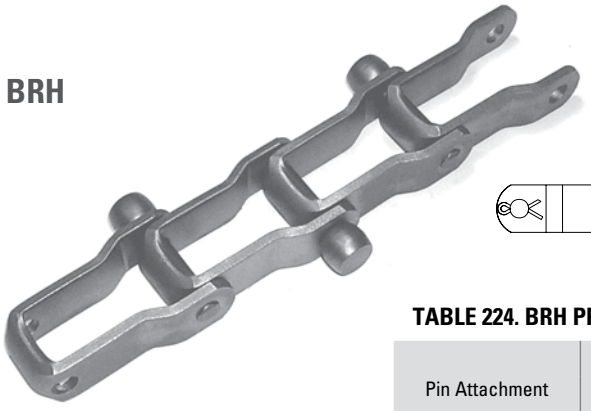



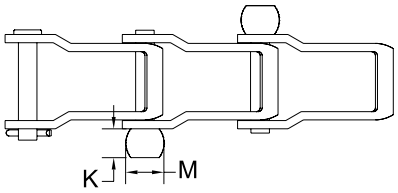

TABLE 224. BRH PRECISION CHAIN ATTACHMENT

Pin Attachment	Chain No.	K	M
		in. mm	**in.** mm
CW	D88K	**0.609** 15.47	**0.812** 20.62

C1, C11

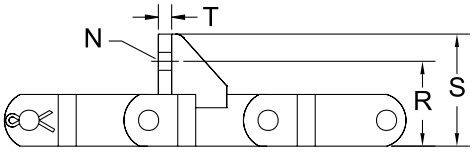

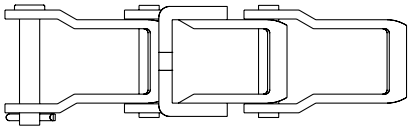

TABLE 225. C1, C11 PRECISION CHAIN ATTACHMENTS

Attachment	Chain No.	R	S	N	T
		in. mm	**in.** mm	**in.** mm	**in.** mm
C1	D662	**1.281** 32.54	**1.781** 45.24	**0.281** 7.14	**0.105** 2.67
C1	D667X	**1.500** 38.10	**1.937** 49.20	**0.281** 7.14	**0.187** 4.75
C11	D662	**1.281** 32.54	**1.781** 45.24	**0.343** 8.71	**0.105** 2.67



D1

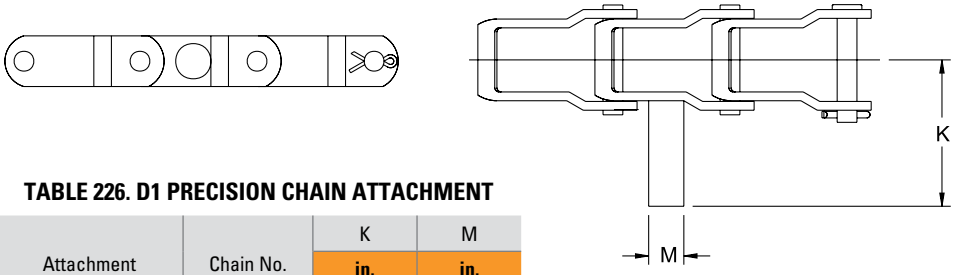

TABLE 226. D1 PRECISION CHAIN ATTACHMENT

Attachment	Chain No.	K	M
		in. mm	**in.** mm
D1	D662	**2.078** 52.78	**0.500** 12.70

F12, F12H

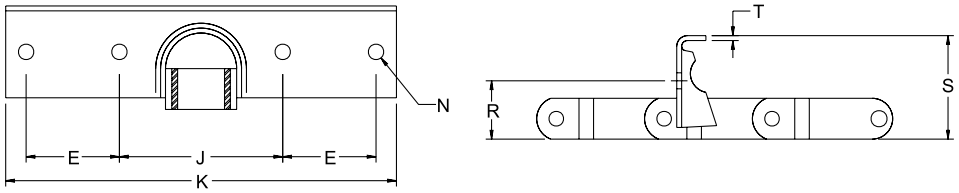

TABLE 227. F12, F12H PRECISION CHAIN ATTACHMENT

Attachment	Chain No.	J	E	K	N	R	S	T
		in. mm	**in.** mm	**in.** mm	**in.** mm	**in.** mm	**in.** mm	**in.** mm
F12	D667H	**3.500** 88.90	**2.000** 50.80	**8.375** 212.73	**0.343** 8.71	**1.250** 31.75	**2.219** 56.36	**0.105** 2.67
F12H	D667H	**3.500** 88.90	**2.000** 50.80	**8.375** 212.73	**0.343** 8.71	**1.250** 31.75	**2.219** 56.36	**0.134** 3.40

F10, F10L, F11

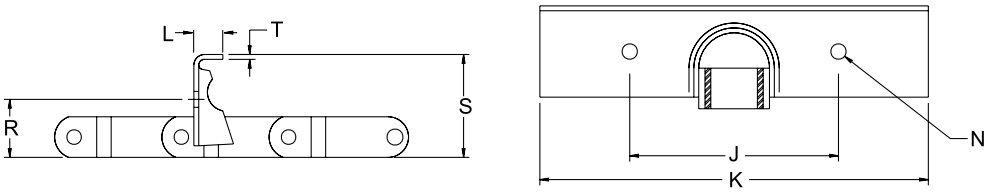

TABLE 228. F10, F10L, F11 PRECISION CHAIN ATTACHMENTS

Attachment	Chain No.	J	K	N	R	S	T	L
		in. mm	**in.** mm	**in.** mm	**in.** mm	**in.** mm	**in.** mm	**in.** mm
F10	D662	**3.500** 88.90	**5.375** 136.53	**0.343** 8.71	**1.000** 25.40	**1.969** 50.01	**0.105** 2.67	**0.562** 14.27
F10	D667H	**3.500** 88.90	**5.375** 136.53	**0.343** 8.71	**1.250** 31.75	**2.219** 56.36	**0.105** 2.67	**0.625** 15.88
F10L	D667H	**3.500** 88.90	**5.375** 136.53	**0.343** 8.71	**1.250** 31.75	**1.969** 50.01	**0.105** 2.67	**0.875** 22.23
F11	D662	**3.500** 88.90	**3.500** 88.90	**0.343** 8.71	**1.000** 25.40	**1.969** 50.01	**0.105** 2.67	**0.562** 14.27
F11	D667H	**3.500** 88.90	**3.500** 88.90	**0.343** 8.71	**1.250** 31.75	**2.219** 56.36	**0.105** 2.67	**0.625** 15.88

FS

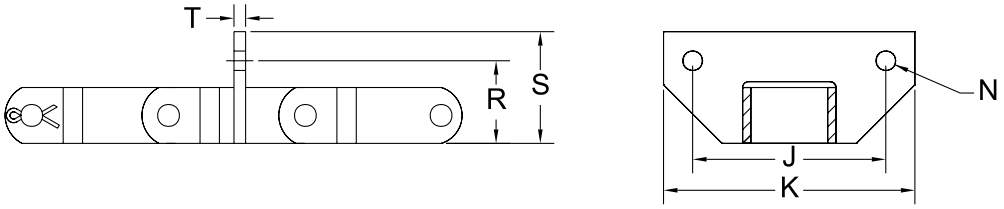

TABLE 229. FS PRECISION CHAIN ATTACHMENT

Attachment	Chain No.	J	K	N	R	S	T
		in. mm	**in.** mm	**in.** mm	**in.** mm	**in.** mm	**in.** mm
FS	D667X	**3.000** 76.20	**4.000** 101.60	**0.343** 8.71	**1.438** 36.53	**1.875** 47.63	**0.187** 4.75
FS	D667XC	**3.000** 76.20	**4.000** 101.60	**0.343** 8.71	**1.438** 36.53	**1.875** 47.63	**0.187** 4.75

FS7, FS15

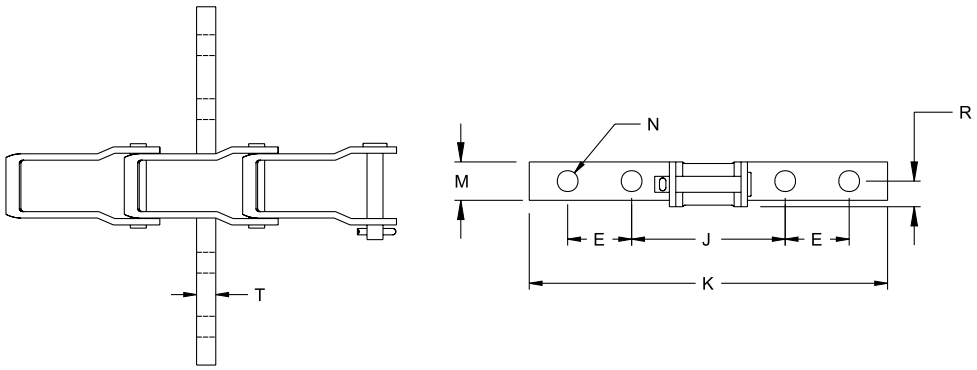

TABLE 230. FS7, FS15 PRECISION CHAIN ATTACHMENTS

Attachment	Chain No.	J	K	E	M	N	T	R
		in. mm	**in.** mm	**in.** mm	**in.** mm	**in.** mm	**in.** mm	**in.** mm
FS7	D667H	**3.000** 76.20	**7.000** 177.80	**1.250** 31.75	**0.750** 19.05	**0.406** 10.31	**0.375** 9.53	**0.500** 12.70
FS7	D667X	**3.000** 76.20	**7.000** 177.80	**1.250** 31.75	**0.750** 19.05	**0.406** 10.31	**0.375** 9.53	**0.625** 15.88
FS15	D88K	**3.800** 96.52	**11.830** 300.48	**3.000** 76.20	**1.000** 25.40	**0.343** 8.71	**0.250** 6.35	**0.531** 13.49

G2, G9

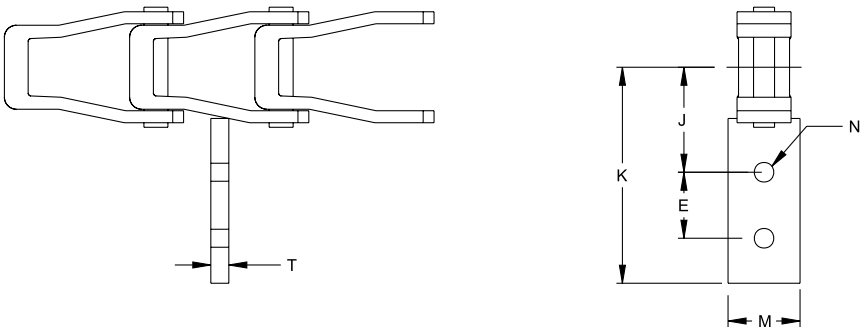

TABLE 231. G2, G9 PRECISION CHAIN ATTACHMENTS

Attachment	Chain No.	J	K	E	M	N	T
		in. mm	**in.** mm	**in.** mm	**in.** mm	**in.** mm	**in.** mm
G2	D88K	**2.250** 57.15	**3.500** 88.90	**0.750** 19.05	**1.000** 25.40	**0.375** 9.53	**0.250** 6.35
G2	D88C	**2.250** 57.15	**3.500** 88.90	**0.750** 19.05	**1.000** 25.40	**0.375** 9.53	**0.250** 6.35
G9	D88C	**2.187** 55.55	**4.500** 114.30	**1.375** 34.93	**1.500** 38.10	**0.343** 8.71	**0.375** 9.53

G19

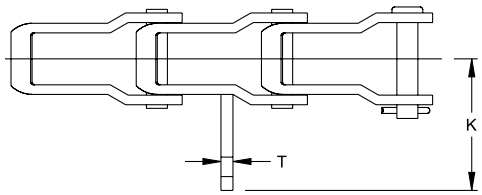

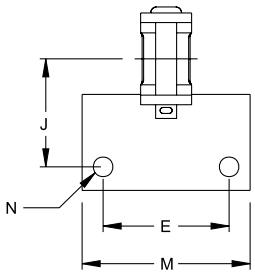

TABLE 232. G19 PRECISION CHAIN ATTACHMENT

Attachment	Chain No.	J	K	E	M	N	T
		in. mm	**in.** mm	**in.** mm	**in.** mm	**in.** mm	**in.** mm
G19	D88K	**2.250** 57.15	**2.750** 69.85	**2.625** 66.68	**3.500** 88.90	**0.406** 10.31	**0.250** 6.35

G27, G27T

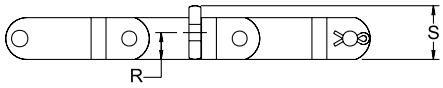

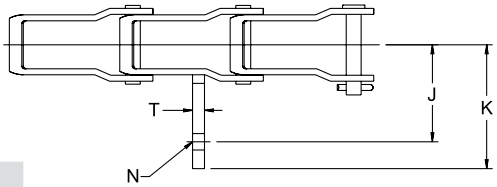

TABLE 233. G27, G27T PRECISION CHAIN ATTACHMENTS

Attachment	Chain No.	J	K	N	R	S	T
		in. mm	**in.** mm	**in.** mm	**in.** mm	**in.** mm	**in.** mm
G27	D667H	**2.031** 51.59	**2.594** 65.89	**0.343** 8.71	**0.562** 14.27	**1.125** 28.58	**0.250** 6.35
G27	D667X	**2.031** 51.59	**2.688** 68.28	**0.343** 8.71	**0.562** 14.27	**1.250** 31.75	**0.312** 7.92
G27	D667XC	**2.031** 51.59	**2.688** 68.28	**0.343** 8.71	**0.562** 14.27	**1.250** 31.75	**0.312** 7.92
G27T	D667H	**2.031** 51.59	**2.625** 66.68	**0.281** 7.14	**0.812** 20.62	**1.375** 34.93	**0.250** 6.35
G27T	D667X	**2.031** 51.59	**2.688** 68.28	**0.343** 8.71	**0.812** 20.62	**1.375** 34.93	**0.312** 7.92
G27T	D667XC	**2.031** 51.59	**2.688** 68.28	**0.343** 8.71	**0.812** 20.62	**1.375** 34.93	**0.312** 7.92

G28

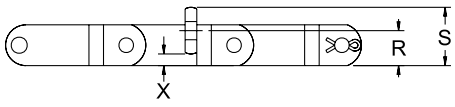

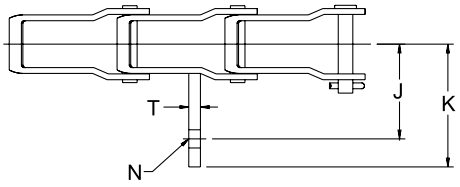

TABLE 234. G28 PRECISION CHAIN ATTACHMENT

Attachment	Chain No.	J	K	N	R	S	T	X
		in. mm	**in.** mm	**in.** mm	**in.** mm	**in.** mm	**in.** mm	**in.** mm
G28	D662	**1.250** 31.75	**1.719** 43.66	**0.281** 7.14	**0.812** 20.62	**1.312** 33.32	**0.250** 6.35	**0.188** 4.78

G30

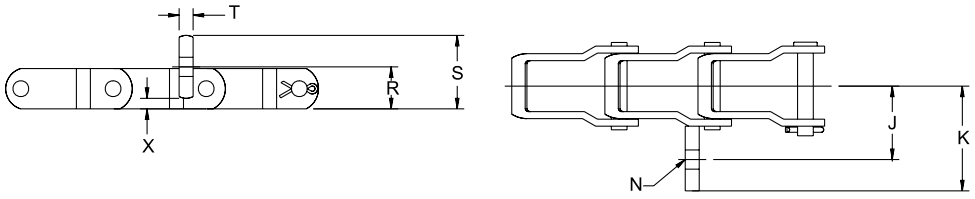

TABLE 235. G30 PRECISION CHAIN ATTACHMENT

Attachment	Chain No.	J	K	N	R	S	T	X
		in. mm	**in.** mm	**in.** mm	**in.** mm	**in.** mm	**in.** mm	**in.** mm
G30	D662	**1.312** 33.32	**1.875** 47.63	**0.343** 8.71	**0.750** 19.05	**1.312** 33.32	**0.250** 6.35	**0.188** 4.78

G37, G37S, G38

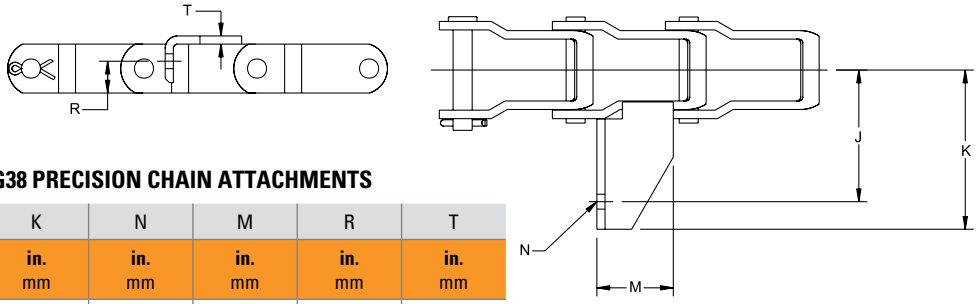

TABLE 236. G37, G37S, G38 PRECISION CHAIN ATTACHMENTS

Attachment	Chain No.	J	K	N	M	R	T
		in. mm	**in.** mm	**in.** mm	**in.** mm	**in.** mm	**in.** mm
G37	D662	**1.938** 49.23	**2.344** 59.54	**0.218** 5.54	**1.125** 28.58	**0.469** 11.91	**0.120** 3.05
G37S	D662	**1.938** 49.23	**2.344** 59.54	**0.281** 7.14	**1.125** 28.58	**0.469** 11.91	**0.120** 3.05
G38	D662	**1.938** 49.23	**2.344** 59.54	**0.343** 8.71	**1.125** 28.58	**0.469** 11.91	**0.120** 3.05

G50

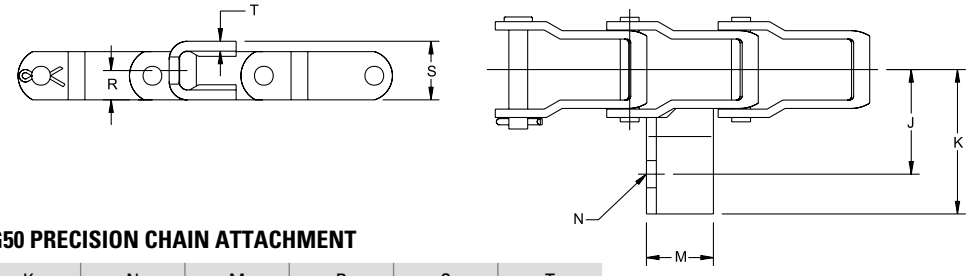

TABLE 237. G50 PRECISION CHAIN ATTACHMENT

Attachment	Chain No.	J	K	N	M	R	S	T
		in. mm	**in.** mm	**in.** mm	**in.** mm	**in.** mm	**in.** mm	**in.** mm
G50	D662	**1.562** 39.67	**2.256** 57.30	**0.406** 10.31	**1.000** 25.40	**0.438** 11.13	**0.875** 22.23	**0.134** 3.40
G50	D667H	**1.625** 41.28	**2.188** 55.58	**0.406** 10.31	**1.000** 25.40	**0.438** 11.13	**0.875** 22.23	**0.134** 3.40

HB1

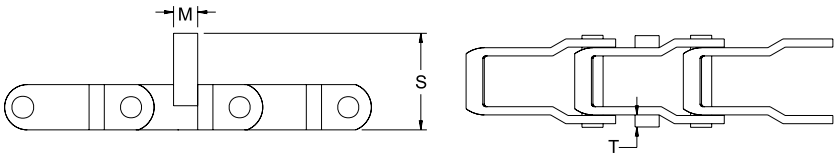

TABLE 238. HB1 PRECISION CHAIN ATTACHMENT

Attachment	Chain No.	M	S	T
		in. mm	**in.** mm	**in.** mm
HB1	D667X	**0.500** 12.70	**2.000** 50.80	**0.250** 6.35
HB1	D667XC	**0.500** 12.70	**2.000** 50.80	**0.250** 6.35

HB4, HB4S

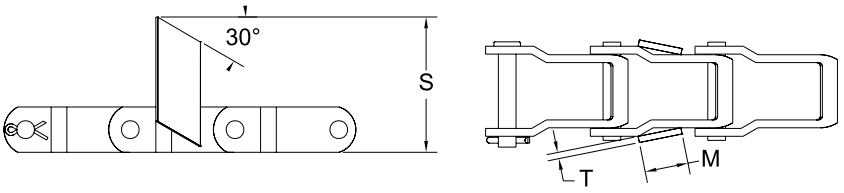

TABLE 239. HB4, HB4S PRECISION CHAIN ATTACHMENTS

Attachment	Chain No.	M	S	T
		in. mm	**in.** mm	**in.** mm
HB4	D662	**0.720** 18.29	**2.344** 59.54	**0.125** 3.18
HB4	D667H	**0.720** 18.29	**2.344** 59.54	**0.125** 3.18
HB4	D667X	**0.720** 18.29	**2.344** 59.54	**0.125** 3.18
HB4	D667XC	**0.720** 18.29	**2.344** 59.54	**0.125** 3.18
HB4	D662	**0.754** 19.15	**1.750** 44.45	**0.120** 3.05



HB10

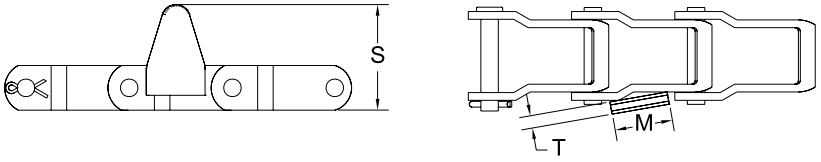

TABLE 240. HB10 PRECISION CHAIN ATTACHMENT

Attachment	Chain No.	M	S	T
		in. mm	**in.** mm	**in.** mm
HB10	D662	**1.000** 25.40	**1.703** 43.26	**0.187** 4.75

K1, K19

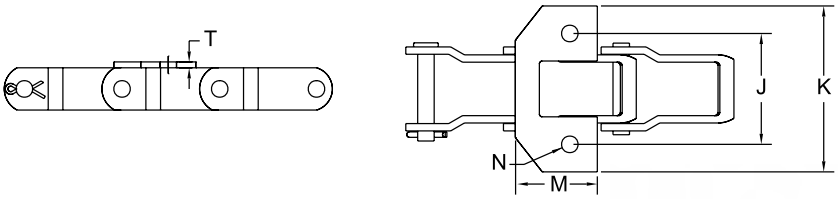



TABLE 241. K1, K19 PRECISION CHAIN ATTACHMENTS

Attachment	Chain No.	J	K	N	M	T
		in. mm	**in.** mm	**in.** mm	**in.** mm	**in.** mm
K1	D662	**2.469** 62.71	**3.250** 82.55	**0.281** 7.14	**1.375** 34.93	**0.120** 3.05
K1	D667H	**2.469** 62.71	**3.250** 82.55	**0.281** 7.14	**1.375** 34.93	**0.120** 3.05
K1	D667X	**2.469** 62.71	**3.250** 82.55	**0.281** 7.14	**1.375** 34.93	**0.120** 3.05
K1	D667XC	**2.469** 62.71	**3.250** 82.55	**0.281** 7.14	**1.375** 34.93	**0.120** 3.05
K19	D662	**2.000** 50.80	**2.812** 71.42	**0.281** 7.14	**1.375** 34.93	**0.120** 3.05

K1C

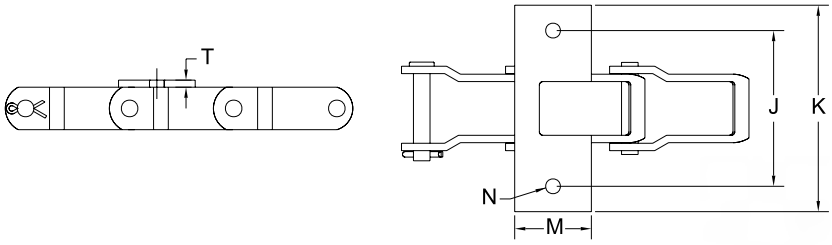



TABLE 242. K1C PRECISION CHAIN ATTACHMENT

Attachment	Chain No.	J	K	N	M	T
		in. mm	**in.** mm	**in.** mm	**in.** mm	**in.** mm
K1C	D88K	**3.750** 95.25	**5.000** 127.00	**0.406** 10.31	**1.875** 47.63	**0.187** 4.75

K1, K1S

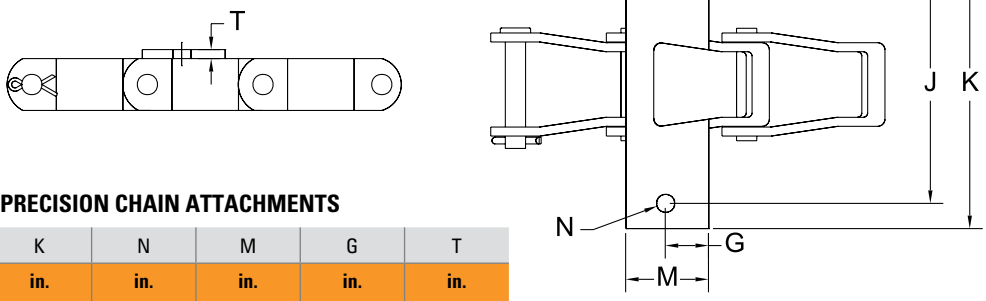

TABLE 243. K1, K1S PRECISION CHAIN ATTACHMENTS

Attachment	Chain No.	J	K	N	M	G	T
		in. mm	**in.** mm	**in.** mm	**in.** mm	**in.** mm	**in.** mm
K1	D88C	**4.000** 101.60	**5.000** 127.00	0.406 10.31	1.875 47.63	**1.000** 25.40	**0.187** 4.75
K1S	D88C	**3.750** 95.25	**5.000** 127.00	**0.453** 11.51	**1.875** 47.63	**1.000** 25.40	**0.250** 6.35

K2C, K2M, K2P

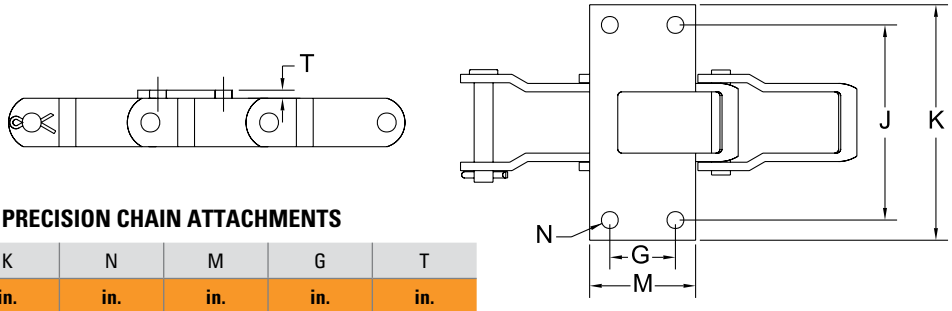

TABLE 244. K2C, K2M, K2P PRECISION CHAIN ATTACHMENTS

Attachment	Chain No.	J	K	N	M	G	T
		in. mm	**in.** mm	**in.** mm	**in.** mm	**in.** mm	**in.** mm
K2C	D88C	**4.188** 106.38	**5.000** 127.00	**0.343** 8.71	**2.250** 57.15	**1.250** 31.75	**0.187** 4.75
K2M	D88C	**4.000** 101.60	**5.000** 127.00	**0.406** 10.31	**2.250** 57.15	**1.125** 28.58	**0.187** 4.75
K2P	D88C	**3.625** 92.08	**5.000** 127.00	**0.343** 8.71	**2.250** 57.15	**1.250** 31.75	**0.187** 4.75

M2

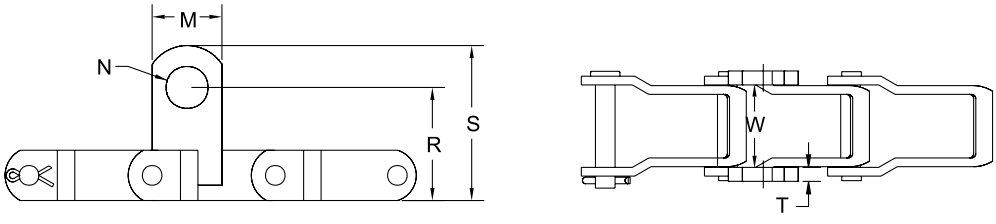

TABLE 245. M2 PRECISION CHAIN ATTACHMENT

Attachment	Chain No.	R	S	N	M	T	W
		in. mm	**in.** mm	**in.** mm	**in.** mm	**in.** mm	**in.** mm
M2	D667X	**2.281** 57.94	**3.156** 80.16	**0.875** 22.23	**1.500** 38.10	**0.312** 7.92	**1.500** 38.10
M2	D667XC	**2.281** 57.94	**3.156** 80.16	**0.875** 22.23	**1.500** 38.10	**0.312** 7.92	**1.500** 38.10
M2	D88K	**2.406** 61.11	**3.281** 83.34	**0.875** 22.23	**1.500** 38.10	**0.312** 7.92	**1.500** 38.10
M2	D308C	**2.843** 72.21	**3.718** 94.44	**0.875** 22.23	**1.500** 38.10	**0.312** 7.92	**1.937** 49.20

SD, MSD

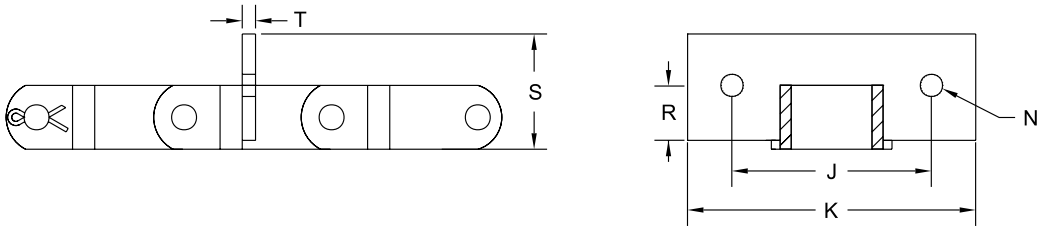

TABLE 246. SD, MSD PRECISION CHAIN ATTACHMENTS

Attachment	Chain No.	J	K	N	R	S	T
		in. mm	**in.** mm	**in.** mm	**in.** mm	**in.** mm	**in.** mm
SD	D667H	– –	**5.250** 133.35	– –	– –	**1.500** 38.10	**0.250** 6.35
MSD	D662	**2.500** 63.50	**3.250** 82.55	**0.281** 7.14	**0.781** 19.84	**1.344** 34.14	**0.134** 3.40

SF22

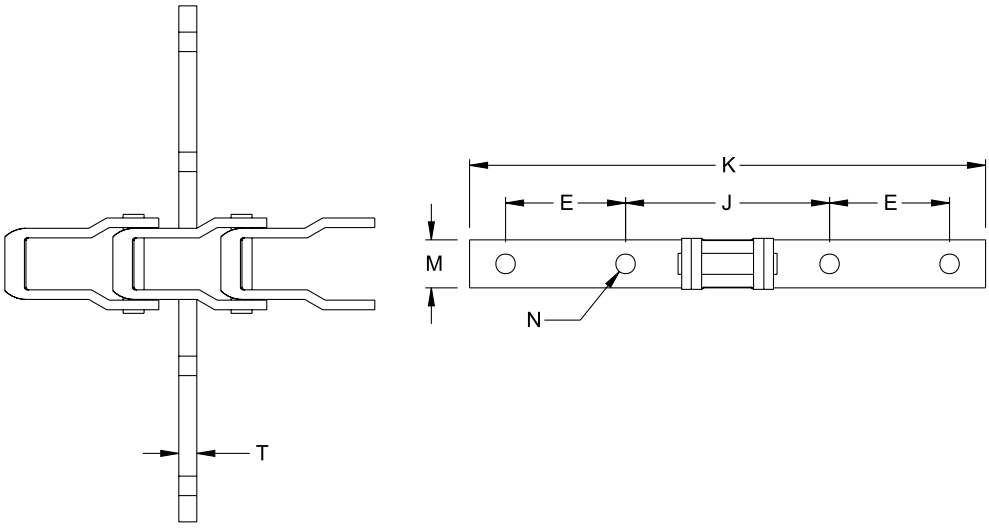

TABLE 247. SF22 PRECISION CHAIN ATTACHMENT

Attachment	Chain No.	J	K	E	M	N	T
		in. mm	**in.** mm	**in.** mm	**in.** mm	**in.** mm	**in.** mm
SF22	D667K	**4.250** 107.95	**10.750** 273.05	**2.500** 63.50	**1.000** 25.40	**0.406** 10.31	**0.375** 9.53
SF22	D667KC	**4.250** 107.95	**10.750** 273.05	**2.500** 63.50	**1.000** 25.40	**0.406** 10.31	**0.375** 9.53

SHB

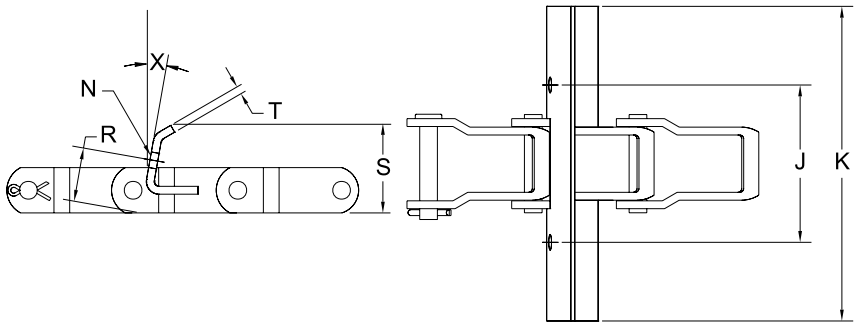

TABLE 248. SHB PRECISION CHAIN ATTACHMENT

Attachment	Chain No.	J	K	N	R	S	T	X
		in. mm	**in.** mm	**in.** mm	**in.** mm	**in.** mm	**in.** mm	**Degree** Radians
SHB	D662	**2.500** 63.50	**5.250** 133.35	**0.281** 7.14	**0.875** 22.23	**1.500** 38.10	**0.120** 3.05	**10.0** 0.175
SH	D667H	**3.125** 79.38	**4.000** 101.60	**0.281** 7.14	**0.625** 15.88	**1.188** 30.18	**1.750** 44.45	**0.120** 3.05
SE	D662	**3.125** 79.38	**4.000** 101.60	**0.343** 8.71	**0.625** 15.88	**1.000** 25.40	**1.562** 39.67	**0.120** 3.05
SE	D667H	**3.125** 79.38	**4.000** 101.60	**0.343** 8.71	**0.625** 15.88	**1.188** 30.18	**1.750** 44.45	**0.120** 3.05

SH, SE

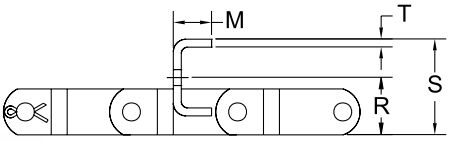

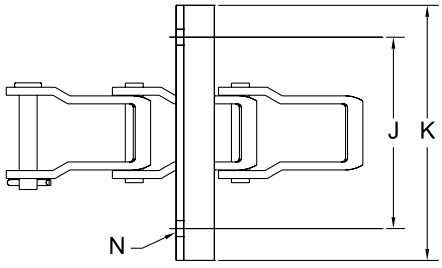



TABLE 249. SH, SE PRECISION CHAIN ATTACHMENTS

Attachment	Chain No.	J	K	N	M	R	S	T
		in. mm	**in.** mm	**in.** mm	**in.** mm	**in.** mm	**in.** mm	**in.** mm
SH	D662	**3.125** 79.38	**4.000** 101.60	**0.281** 7.14	**0.625** 15.88	**1.000** 25.40	**1.562** 39.67	**0.120** 3.05
SH	D667H	**3.125** 79.38	**4.000** 101.60	**0.281** 7.14	**0.625** 15.88	**1.188** 30.18	**1.750** 44.45	**0.120** 3.05
SE	D662	**3.125** 79.38	**4.000** 101.60	**0.343** 8.71	**0.625** 15.88	**1.000** 25.40	**1.562** 39.67	**0.120** 3.05
SE	D667H	**3.125** 79.38	**4.000** 101.60	**0.343** 8.71	**0.625** 15.88	**1.188** 30.18	**1.750** 44.45	**0.120** 3.05

STEEL PINTLE SPROCKET

PINTLE SPROCKET FEATURES

- Premium quality steel sprockets
- Made to ANSI specifications
- Design includes annular ring
- Design includes mud clearance
- Plain bore or keyway and two set screws
- Hubs are precision machined

ANNULAR RING AND MUD CLEARANCE

The annular ring contacts the bottom edge of the pintle chain link, relieving the chain barrel and sprocket tooth face of the chain load. This extends the service life of both the chain and the sprockets.

The mud clearance feature consists of narrowing the bottom diameter of the sprocket in between the tooth where it contacts the chain barrel. This allows debris to escape and prevents sprocket tooth build-up.

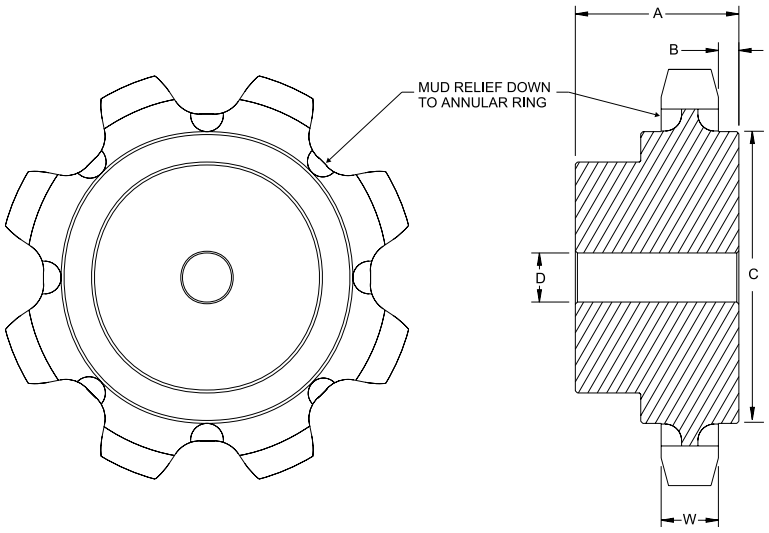

TABLE 250. STEEL PINTLE SPROCKET

Chain No.	Number of Teeth	Bore D	W	A	B	C	Key Size
		in. mm	**in.** mm	**in.** mm	**in.** mm	**in.** mm	**in.** mm
D662	6	**0.750** 19.05	**0.750** 19.05	**2.000** 50.80	**0.250** 6.35	**2.130** 54.10	– –
D662	6	**0.875** 22.23	**0.750** 19.05	**2.000** 50.80	**0.250** 6.35	**2.130** 54.10	**0.187** 4.75
D667X	6	**0.750** 19.05	**0.875** 22.23	**2.280** 57.91	**0.312** 7.92	**2.920** 74.17	– –
D667X	6	**1.500** 38.10	**0.875** 22.23	**2.280** 57.91	**0.312** 7.92	**2.920** 74.17	**0.375** 9.53
D667X	8	**0.750** 19.05	**0.875** 22.23	**2.530** 64.26	**0.312** 7.92	**4.450** 113.03	– –
D667X	8	**1.500** 38.10	**0.875** 22.23	**2.530** 64.26	**0.312** 7.92	**4.450** 113.03	**0.375** 9.53
D667X	8	**2.000** 50.80	**0.875** 22.23	**2.530** 64.26	**0.312** 7.92	**4.450** 113.03	**0.500** 12.70
D667H	6	– –	**0.900**	– –	**0.050**	**3.116**	– –
D667H	8	– –	**0.900**	– –	**0.050**	**4.694**	– –
D308C	6	– –	**1.125**	– –	**0.063**	**3.795**	– –
D308C	8	– –	**1.125**	– –	**0.063**	**4.694**	– –
D88C	6	– –	**1.080**	– –	**0.060**	**3.379**	– –
D88C	8	– –	**1.080**	– –	**0.060**	**5.159**	– –
D88K	6	– –	**0.900**	– –	**0.050**	**3.439**	– –
D88K	8	– 19.05	**0.900** 22.23	– 64.26	**0.050** 7.92	**5.219** 113.03	– –

10M 09-16: 29 Order No. 10910 | Timken® is a registered trademark of The Timken Company. | Drives® is a registered trademark of Timken Drives LLC. | © 2016 The Timken Company | Printed in U.S.A.

TIMKEN

The Timken team applies their know-how to improve the reliability and performance of machinery in diverse markets worldwide. The company designs, makes and markets high-performance mechanical components, including bearings, gears, belts, chain and related mechanical power transmission products and services.

www.timken.com | www.drivesllc.com

Stronger. By Design.

Price: USD $75